MIAMI-DADE

BUILDING CODE COMPLIANCE OFFICE (BCCO)
PRODUCT CONTROL DIVISION

MIAMI-DADE COUNTY, FLORIDA
METRO-DADE FLAGLER BUILDING
140 WEST FLAGLER STREET, SUITE 1603
MIAMI, FLORIDA 33130-1563
(305) 375-2901 FAX (305) 375-2908

NOTICE OF ACCEPTANCE (NOA)

Rolladen, Inc.
550 Ansin Boulevard
Hallandale, Florida 33009

SCOPE:

This NOA is being issued under the applicable rules and regulations governing the use of construction materials. The documentation submitted has been reviewed by Miami-Dade County Product Control Division and accepted by the Board of Rules and Appeals (BORA) to be used in Miami Dade County and other areas where allowed by the Authority Having Jurisdiction (AHJ).

This NOA shall not be valid after the expiration date stated below. The Miami-Dade County Product Control Division (In Miami Dade County) and/or the AHJ (in areas other than Miami Dade County) reserve the right to have this product or material tested for quality assurance purposes. If this product or material fails to perform in the accepted manner, the manufacturer will incur the expense of such testing and the AHJ may immediately revoke, modify, or suspend the use of such product or material within their jurisdiction. BORA reserves the right to revoke this acceptance, if it is determined by Miami-Dade County Product Control Division that this product or material fails to meet the requirements of the applicable building code.

This product is approved as described herein, and has been designed to comply with the High Velocity Hurricane Zone of the Florida Building Code.

DESCRIPTION: Extruded Aluminum Accordion Shutter

APPROVAL DOCUMENT: Drawing No. 96-19, titled " Accordion Shutter Details ", sheets 1 through 5 of 5, prepared by Al-Farooq Corporation, dated April 25, 1996, last revision #E dated August 01, 2000 bearing the Miami-Dade County Product Control Revision stamp with the Notice of Acceptance number and expiration date by the Miami-Dade County Product Control Division.

MISSILE IMPACT RATING: Large and Small Missile Impact

LABELING: Each unit shall bear a permanent label with the manufacturer's name or logo, city, state and the following statement: "Miami-Dade County Product Control Approved", unless otherwise noted herein.

RENEWAL of this NOA shall be considered after a renewal application has been filed and there has been no change in the applicable building code negatively affecting the performance of this product.

TERMINATION of this NOA will occur after the expiration date or if there has been a revision or change in the materials, use, and/or manufacture of the product or process. Misuse of this NOA as an endorsement of any product, for sales, advertising or any other purposes shall automatically terminate this NOA. Failure to comply with any section of this NOA shall be cause for termination and removal of NOA.

ADVERTISEMENT: The NOA number preceded by the words Miami-Dade County, Florida, and followed by the expiration date may be displayed in advertising literature. If any portion of the NOA is displayed, then it shall be done in its entirety.

INSPECTION: A copy of this entire NOA shall be provided to the user by the manufacturer or its distributors and shall be available for inspection at the job site at the request of the Building Official.

This NOA **revises & renews NOA # 00-0411.07 &** consists of this page 1 & approval document mentioned above. The submitted documentation was reviewed by **Helmy A. Makar, P.E.**

PRODUCT CONTROL ACCEPTED

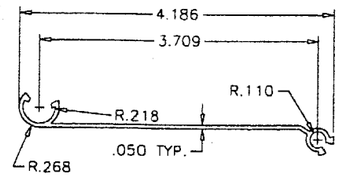

BLADE '5905'
6063-T6

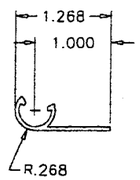

END SLAT
6063-T6

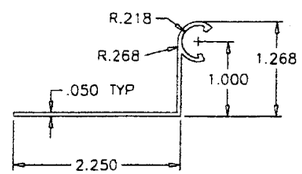

90° END SLAT
6063-T6

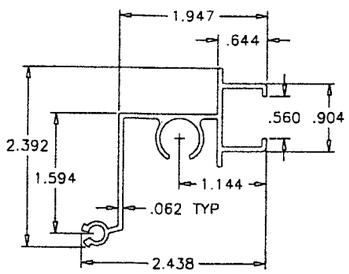

MALE LOCK SLAT '5904'
6063-T6

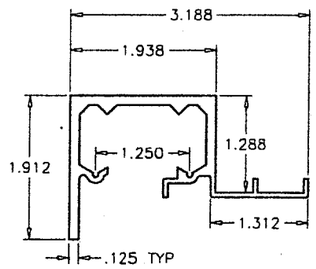

H.D. HEADER
6063-T6

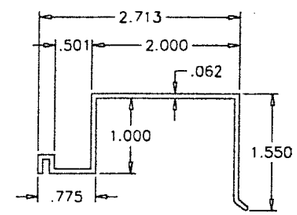

RAIN-GUARD
6063-T6

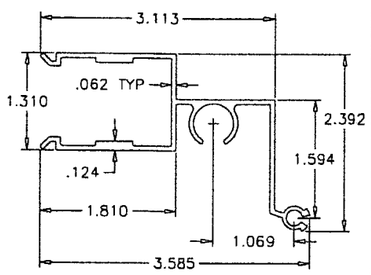

FEMALE LOCK SLAT '5903'
6063-T6

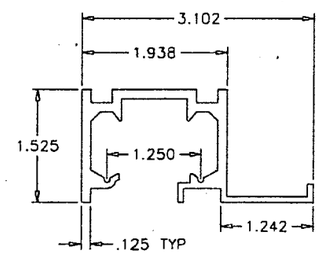

ALT. HEADER
6063-T6

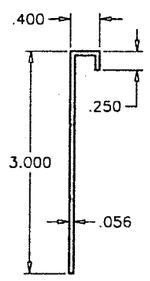

BOTTOM GUTTER
6063-T6

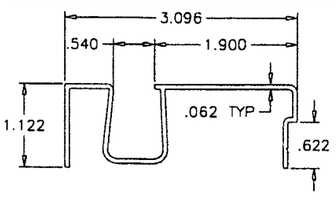

ALT. SILL
6063-T6

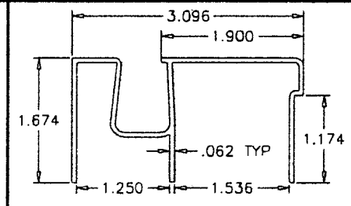

SILL
6063-T6

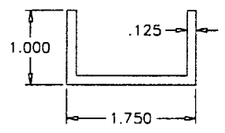

FLOOR SHOE
6063-T6

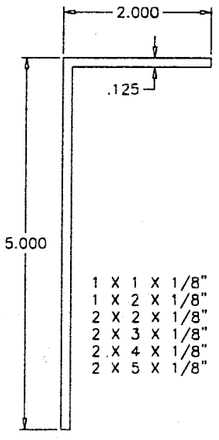

ALIMINUM ANGLES
6063-T6

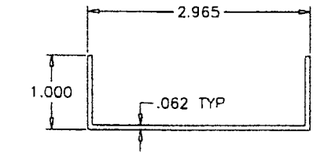

ALT. SILL ADAPTER
6063-T6

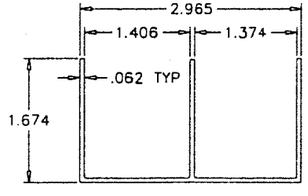

SILL ADAPTER
6063-T6

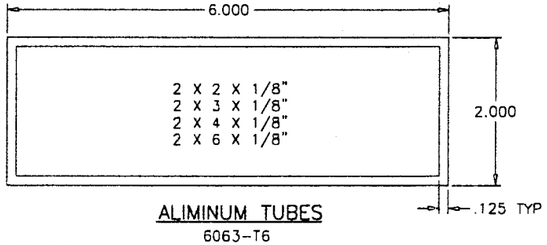

ALIMINUM TUBES
6063-T6

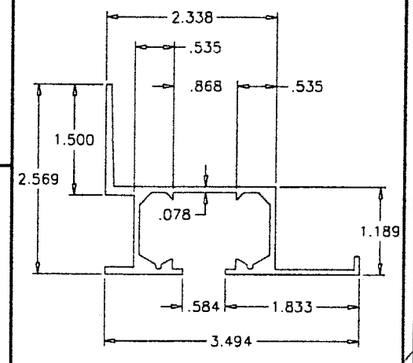

WALL MOUNT TRACK
6063-T6

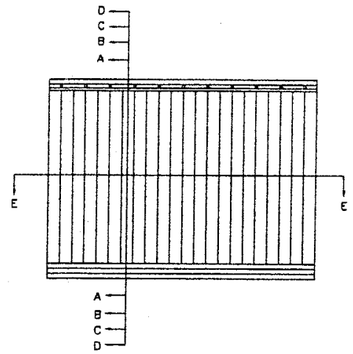

TYPICAL ELEVATION

GENERAL NOTES

1. THIS PRODUCT IS DESIGNED TO COMPLY WITH THE HIGH VELOCITY HURRICANE ZONE OF THE 2001 FLORIDA BUILDING CODE. ALSO FOR WIND LOADS AS PER ASCE 7 USING CORRESPONDING LOADS.
2. DESIGN CRITERIA FOR ALUMINUM, MINIMUM MECHANICAL PROPERTIES, AND SAFETY FACTORS ARE IN ACCORDANCE WITH THE "ALUMINUM CONSTRUCTION MANUAL" LATEST EDITION.
3. ALL EXTRUSIONS SHALL BE ALLOYS AS SHOWN ON DETAILS.
4. STEEL SURFACES TO BE PLACED IN CONTACT WITH ALUMINUM SHALL BE GIVEN ONE COAT OF ZINC CHROMATE PRIMER IN ACCORDANCE WITH FEDERAL SPEC. NO. TTP-645, OR BE GALVANIZED.
5. ANCHORS SHALL BE AS LISTED, SPACED AS SHOWN ON DETAILS. ANCHOR EMBEDMENT TO BASE MATERIAL SHALL BE BEYOND WALL DRESSING OR STUCCO.
6. ALL BOLTS, NUTS AND WASHERS SHALL BE STAINLESS STEEL OR ALUMINUM ALLOY 2024-T4 OR 7075-T6.
7. DESIGN CRITERIA FOR PANELS: MAX DEFLECTION < L/30 FOR NEGATIVE PRESSURE AND THE LESSER OF L/30 OR 2" FOR POSITIVE PRESSURE.
8. ANCHORING OR LOADING CONDITIONS OTHER THAN THOSE SHOWN IN THESE DETAILS ARE NOT PART OF THIS APPROVAL.
9. EACH UNIT SHALL HAVE A READILY VISIBLE DECAL INSTRUCTING OWNER OR TENANT TO SECURE CENTERMATES BY USING ALUMINUM PLATE, DURING PERIODS OF HURRICANE WARNING.

DESIGN LOADS SHALL BE CALCULATED AS PER REQUIREMENTS OF ASCE 7-88, ASCE 7-93, ASCE 7-95 OR ASCE 7-98 AS REQUIRED BY PREVAILING BUILDING CODE.

DESIGN PRESSURE RATING = + 74 PSF
- 105 PSF

PRODUCT MARKING

A LABEL SHALL BE AFFIXED ON LOCKING MEMBER ON UNIT ABOVE THE LOCK WITH THE FOLLOWING STATEMENT.

'ROLLADEN INC.' HALLANDALE, FL.
"DADE COUNTY PRODUCT CONTROL APPROVED"

ANCHORS: EMBEDMENT & EDGE DISTANCES SHOWN ARE BEYOND THE WALL & FLOOR COVERING (STUCCO, TILES, ETC.)

PRODUCT REVISED
as complying with the Florida Buiding Code
Acceptance No 03-0123.07
Expiration Date 02/27/2008
By Helmy A. Melar
Miami Dade Product Control Division

Engr: DR. HUMAYOUN FAROOQ
STRUCTURES
FLA. PE # 16557
C.A.N. 3538

FEB 17 2003

a f c

AL-FAROOQ CORPORATION
ENGINEERS, PLANNERS & PRODUCT TESTING
1235 SW 87 AVE
MIAMI, FLORIDA 33174
(305) 264-8100

ACCORDION\RN196-19

ACCORDION SHUTTER DETAILS

ROLLADEN INC.
550 ANSIN BOULEVARD
HALLANDALE, FL. 33009
(305) 757 - 8591

revisions:

no	date	by	description
A	11.25.96	H	GENERAL REVISION
B	01.02.97	H	INS. MOUNT & CHART 5 REV.
C	01.30.97	H	ANCHOR CHARTS REV.
D	01.14.00	H	WALL TRACK ADDED
E	08.01.00	H	REV. PER BCCO COMMENTS

date: 04-25-96
scale: 1/2" = 1"
design by:
drawn by: HAMID
checked by:

drawing no.
96-19

sheet 1 of 5

WALL MOUNTS

ANCHOR TYPE	CHART TO USE CONC.	BLOCK	WOOD
A	6	2	–
C	3	2	–
D	6	3	–
E	–	–	3

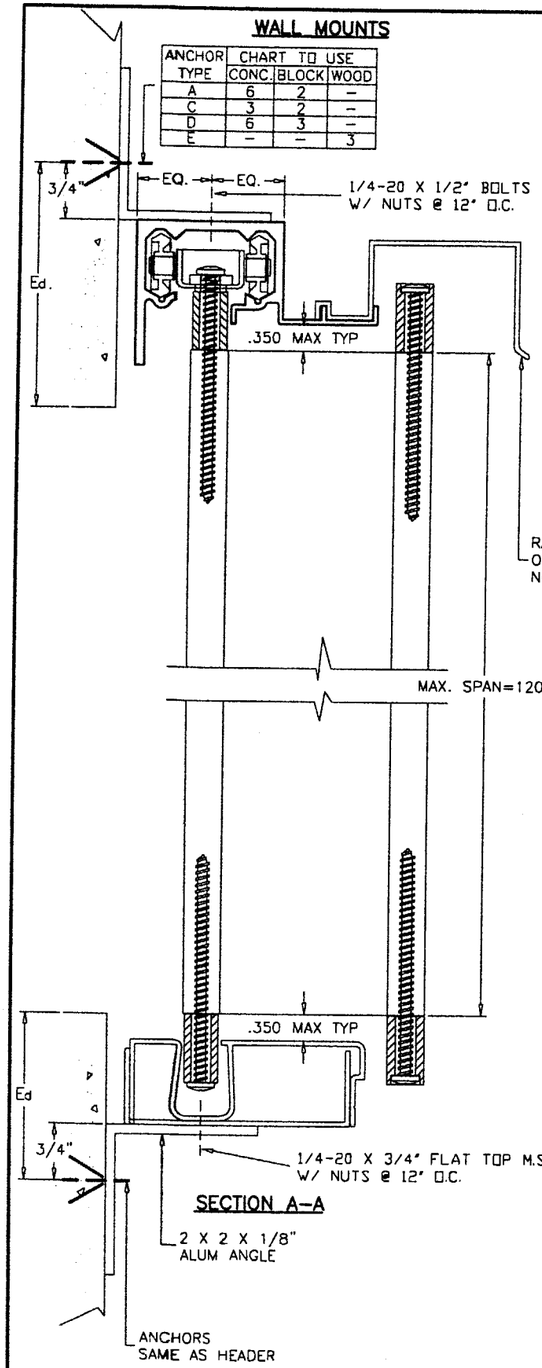

SECTION A–A

ALT. WALL MOUNTS

ANCHOR TYPE	CHART TO USE CONC.	BLOCK	WOOD
A	4	1	–
C	2	1	–
D	4	2	–
E	–	–	2

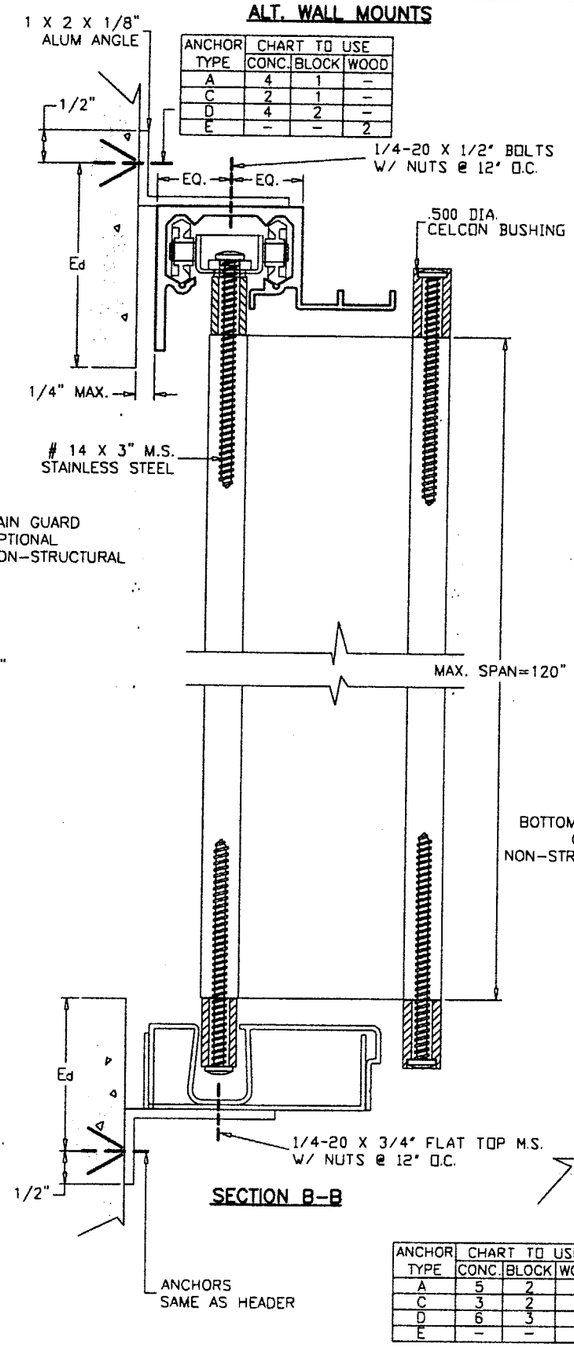

SECTION B–B

INSIDE MOUNTS

ANCHOR TYPE	CHART TO USE CONC.	BLOCK	WOOD
A	6	3	–
C	4	3	–
D	6	4	–
E	–	–	3

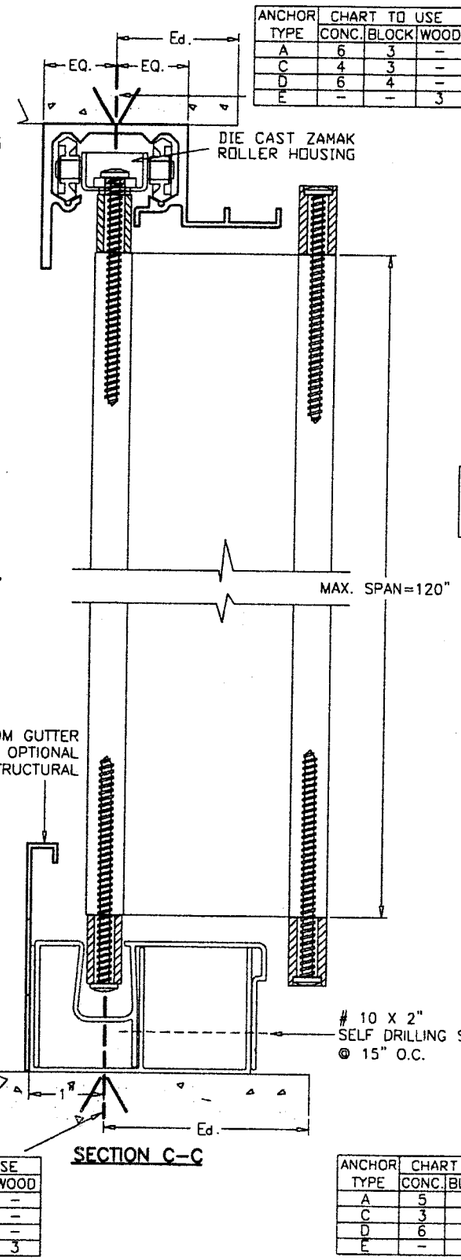

SECTION C–C

ANCHOR TYPE	CHART TO USE CONC.	BLOCK	WOOD
A	5	2	–
C	3	2	–
D	6	3	–
E	–	–	3

ANCHOR TYPE	CHART TO USE CONC.	BLOCK	WOOD
A	5	2	–
C	3	2	–
D	6	3	–
E	–	–	3

BUILT–OUT CONDITION

ANCHOR TYPE	CHART TO USE CONC.	BLOCK	WOOD
A	5	2	–
C	3	2	–
D	6	3	–
E	–	–	3

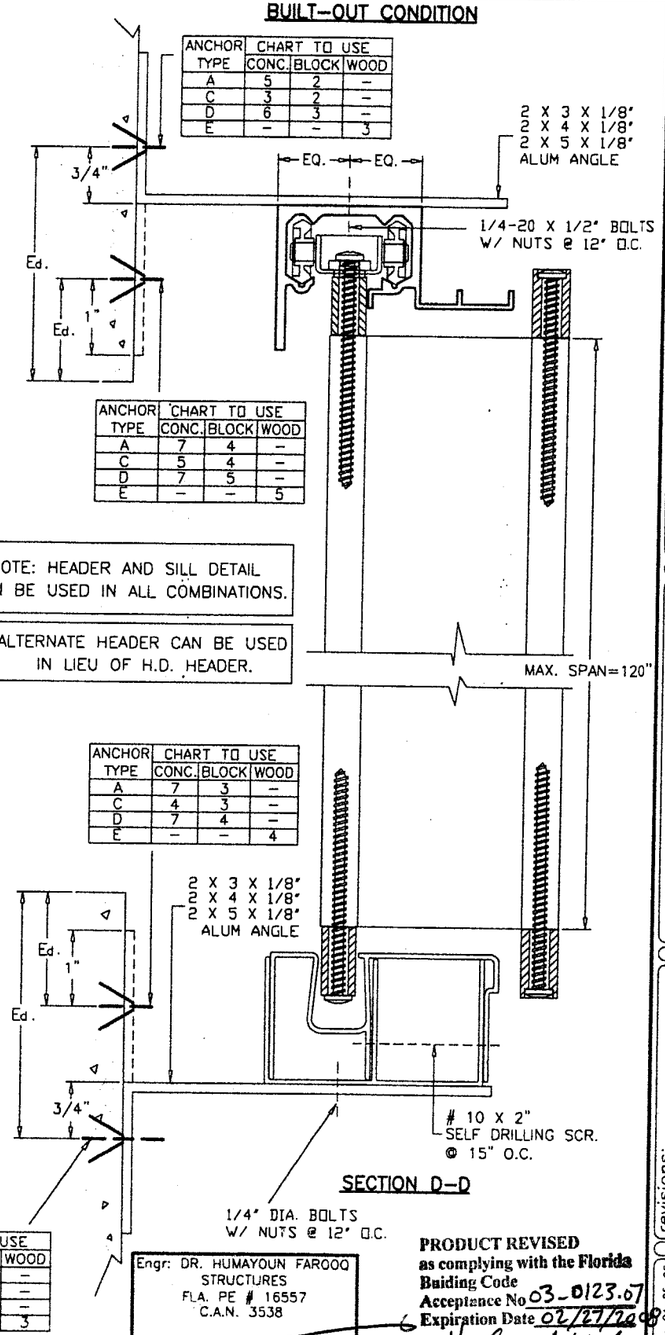

SECTION D–D

ANCHOR TYPE	CHART TO USE CONC.	BLOCK	WOOD
A	7	4	–
C	5	4	–
D	7	5	–
E	–	–	5

ANCHOR TYPE	CHART TO USE CONC.	BLOCK	WOOD
A	7	3	–
C	4	3	–
D	7	4	–
E	–	–	4

NOTE: HEADER AND SILL DETAIL CAN BE USED IN ALL COMBINATIONS.

ALTERNATE HEADER CAN BE USED IN LIEU OF H.D. HEADER.

Ed = TYPICAL EDGE DISTANCE
CONC. & BLOCK = 12d (12 ANCHOR DIAMETERS)
WOOD = 5d
FOR LESSER EDGE DISTANCES SEE SHEET 5 OF 5.

FOR GENERAL NOTES AND EXTRUSION DETAILS SEE SHEET 1 OF 5.
FOR WOOD INSTALLATIONS SEE SHEET 4 OF 5.
FOR ANCHOR CHARTS SEE SHEET 5 OF 5.

Engr: DR. HUMAYOUN FAROOQ
STRUCTURES
FLA. PE # 16557
C.A.N. 3538

FEB 17 2003

PRODUCT REVISED
as complying with the Florida Buiding Code
Acceptance No 03-0123.07
Expiration Date 02/27/2008
By Helena A. Maka
Miami Dade Product Control Division

AL–FAROOQ CORPORATION
ENGINEERS, PLANNERS & PRODUCT TESTING
1235 SW 87 AVE
MIAMI, FLORIDA 33174
(305) 264–8100

ACCORDION\RNI96-19

ACCORDION SHUTTER DETAILS

ROLLADEN INC.
550 ANSIN BOULEVARD
HALLANDALE, FL. 33009
(305) 757 – 8591

revisions:

no	date	by	description

date: 04-25-96
scale: 1/2" = 1"
design by:
drawn by: HAMID
checked by:

drawing no.
96–19

ANCHOR TYPE	CHART TO USE CONC.	BLOCK	WOOD
A	4	2	–
C	2	2	–
D	4	2	–
E	–	–	2

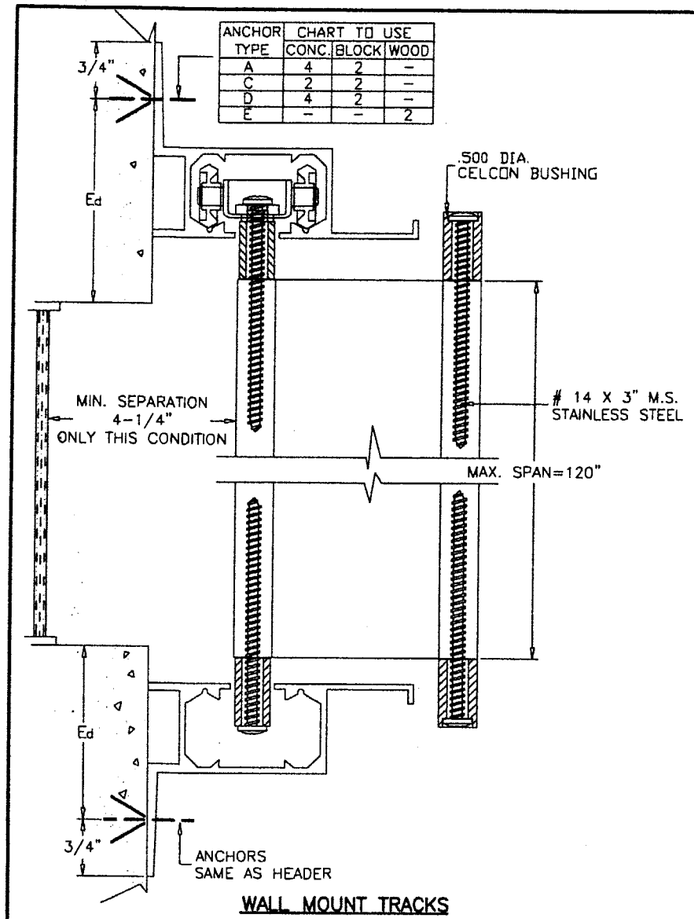

WALL MOUNT TRACKS

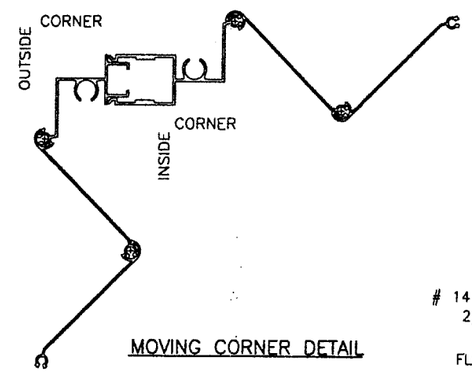

MOVING CORNER DETAIL

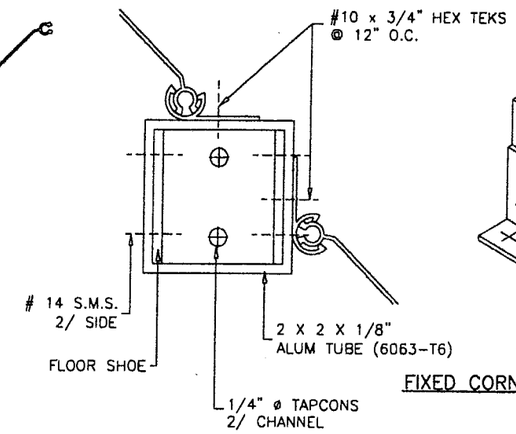

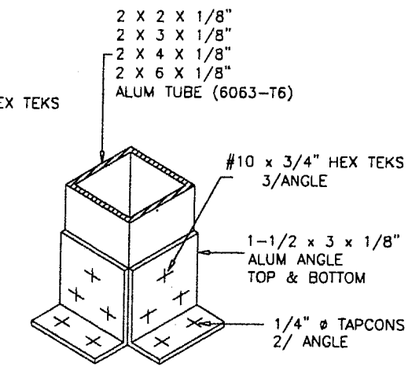

FIXED CORNER DETAIL

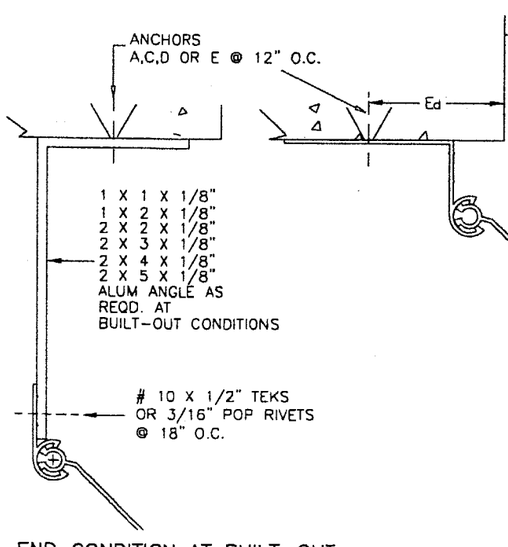

END CONDITION AT BUILT-OUT

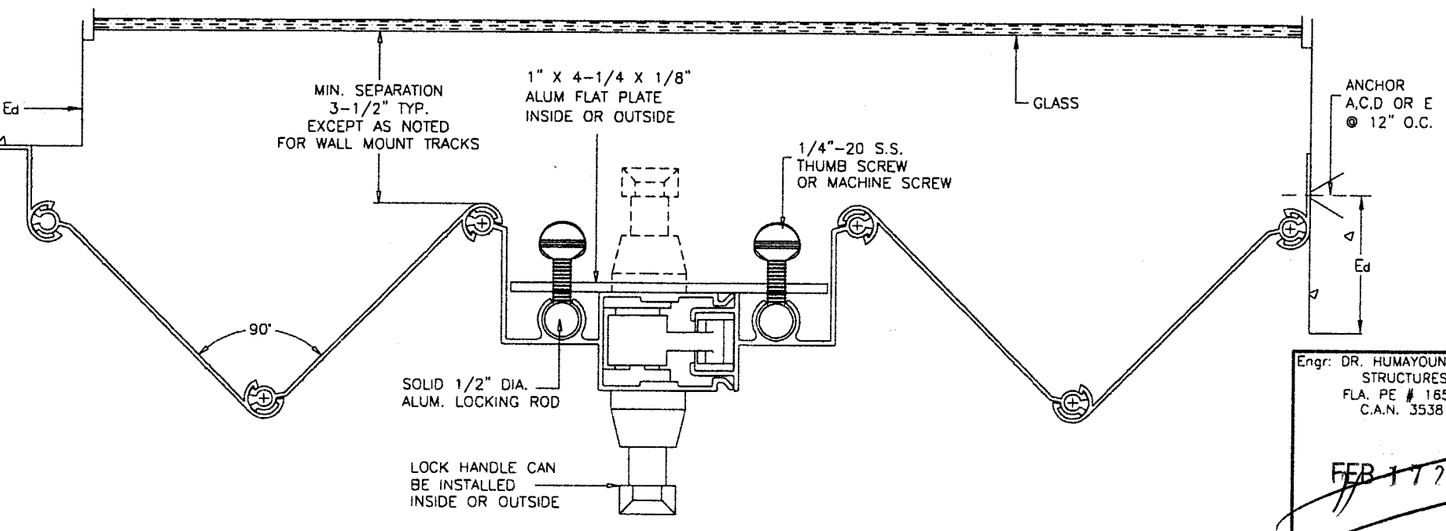

SECTION E-E

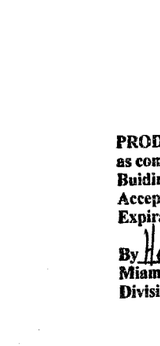

PRODUCT REVISED
as complying with the Florida Buiding Code
Acceptance No. 03-0123.07
Expiration Date 02/27/2008
By Helmy A. Mekar
Miami Dade Product Control Division

Engr: DR. HUMAYOUN FAROOQ
STRUCTURES
FLA. PE # 16557
C.A.N. 3538

FEB 17 2003

a f c

AL-FAROOQ CORPORATION
ENGINEERS, PLANNERS & PRODUCT TESTING
1235 SW 87 AVE
MIAMI, FLORIDA 33174
(305) 264-8100

ACCORDION\RNI96-19

ACCORDION SHUTTER DETAILS

ROLLADEN INC.
550 ANSIN BOULEVARD
HALLANDALE, FL. 33009
(305) 757 - 8591

revisions:

no	date	by	description

date: 04-25-96
scale: 1/2" = 1'
design by:
drawn by: HAMID
checked by:

drawing no.
96-19

sheet 3 of 5

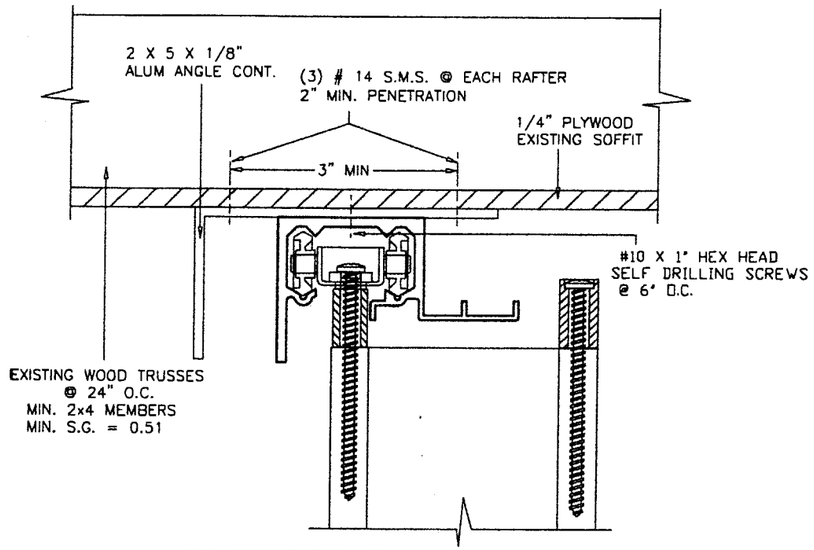

HEADER CONNECTION TO WOOD TRUSSES

MAX SHUTTER HEIGHT = 123"
MAX DESIGN LOAD = 62 PSF

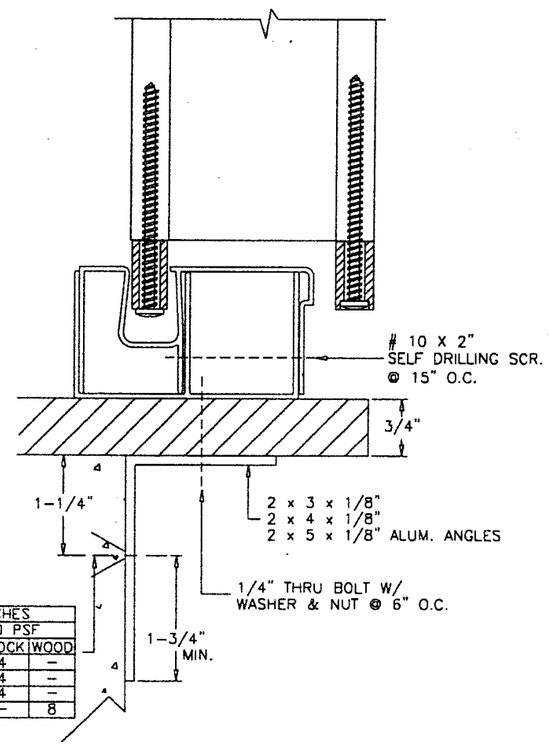

ANCHOR TYPE	ANCHOR SPACING INCHES					
	UPTO 40 PSF			UPTO 70 PSF		
	CONC	BLOCK	WOOD	CONC	BLOCK	WOOD
A	23	8	–	13	4	–
C	11	7	–	6	4	–
D	16	7	–	9	4	–
E	–	–	14	–	–	8

COUNTER TOP CONDITION
(PASS THRU WINDOW)
MAX SHUTTER HEIGHT = 6 FT.

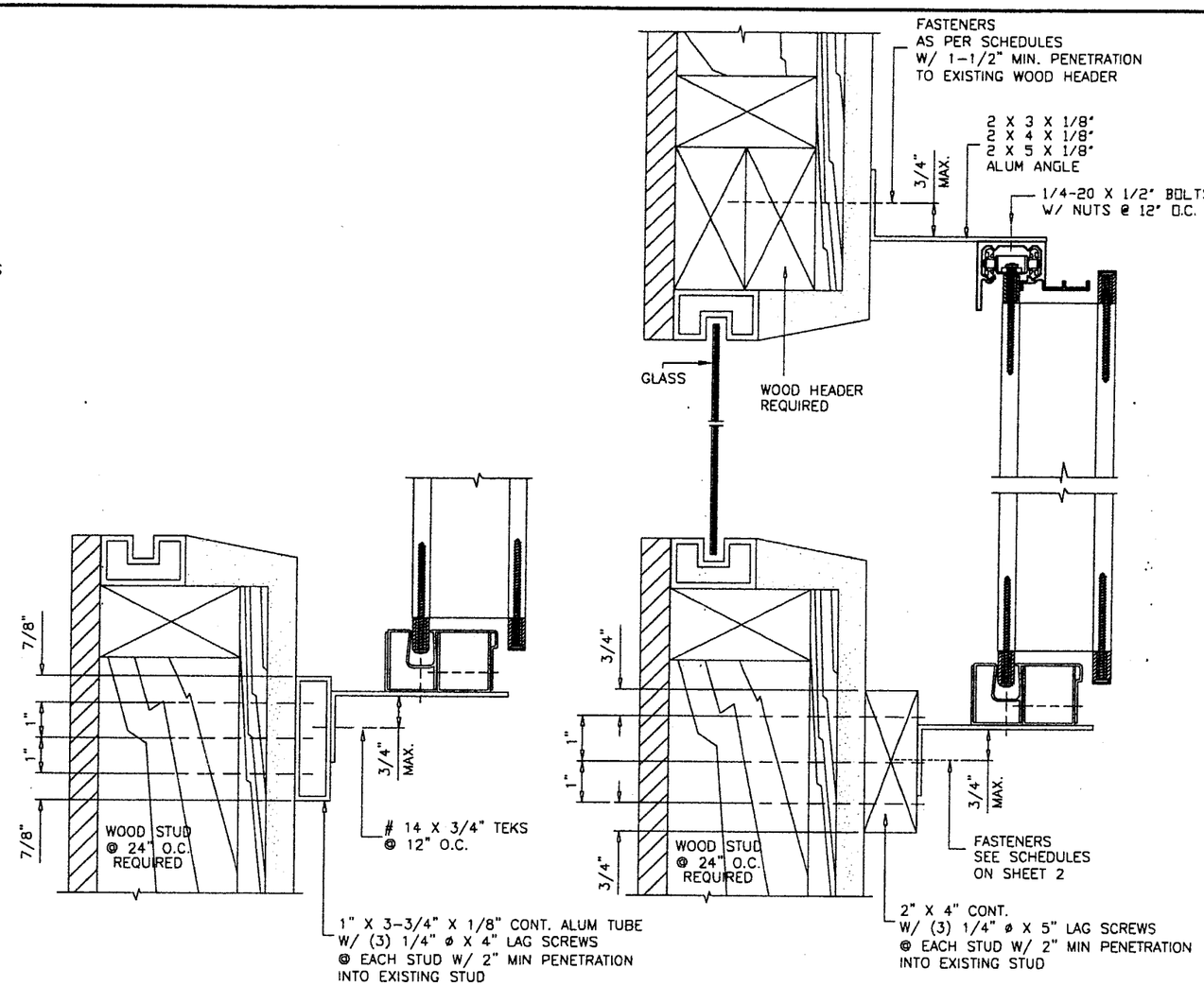

INSTALLATION DETAIL ON EXISTING WOOD BUCKS SCALE : 1/4"=1"

MAX. SHUTTER HEIGHT = 6 FT.
MAX. DESIGN LOAD = 65 PSF
OTHER CONDITIONS SIMILAR
FOR FASTENERS SEE SCHEDULES ON SHEET 2

PRODUCT REVISED
as complying with the Florida Buiding Code
Acceptance No 03-0123.07
Expiration Date 02/27/2008
By Helmy A. Melad
Miami Dade Product Control Division

Engr: DR. HUMAYOUN FAROOQ
STRUCTURES
FLA. PE # 16557
C.A.N. 3538

FEB 17 2003

a f c

AL-FAROOQ CORPORATION
ENGINEERS, PLANNERS & PRODUCT TESTING
1235 SW 87 AVE
MIAMI, FLORIDA 33174
(305) 264-8100

ACCORDION\RNI96-19

ACCORDION SHUTTER DETAILS

ROLLADEN INC.
550 ANSIN BOULEVARD
HALLANDALE, FL. 33009
(305) 757 - 8591

revisions:

no	date	by	description

date: 04-25-96
scale: 1/2" = 1"
design by:
drawn by: HAMID
checked by:

drawing no.
96-19

sheet 4 of 5

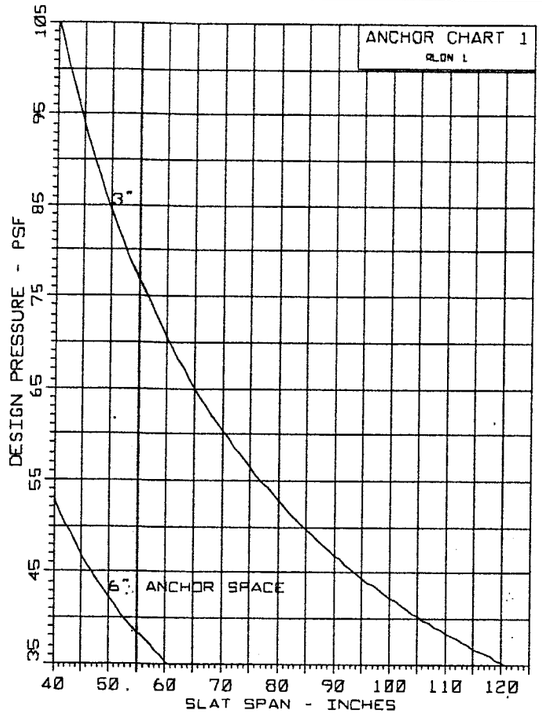

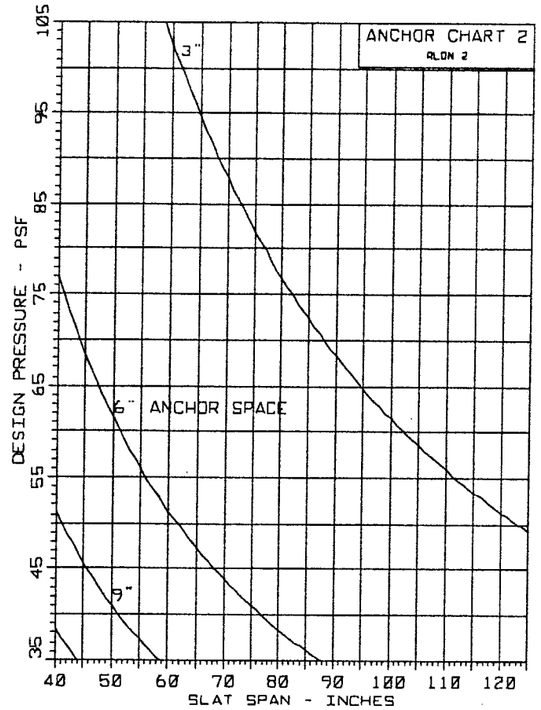

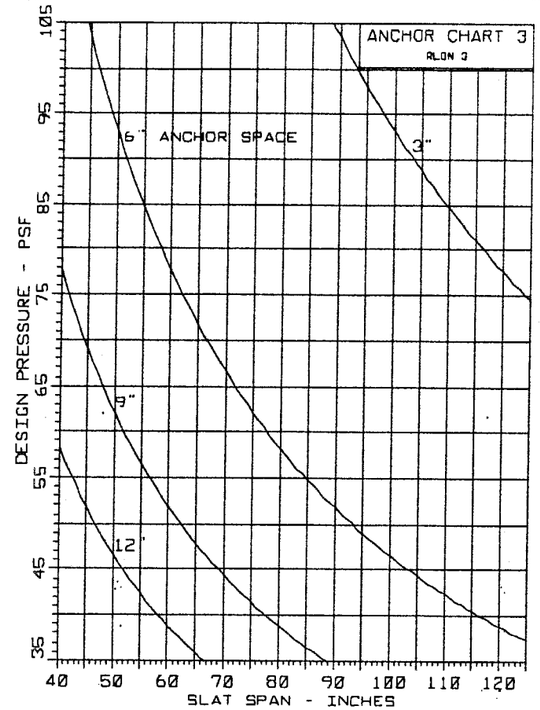

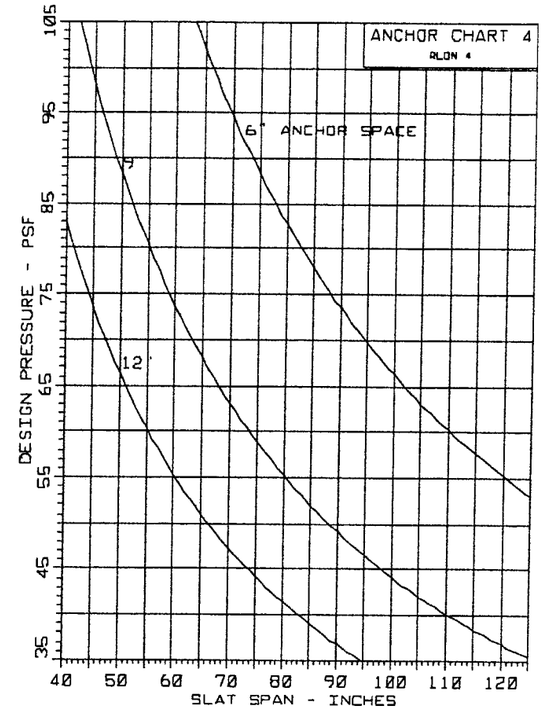

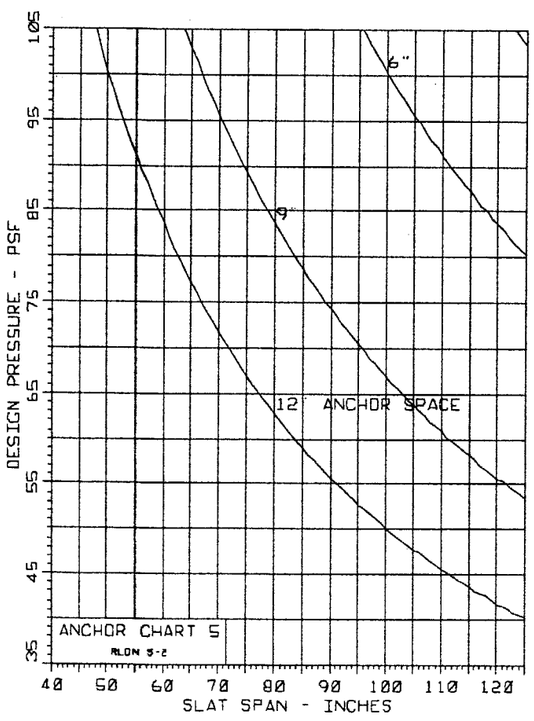

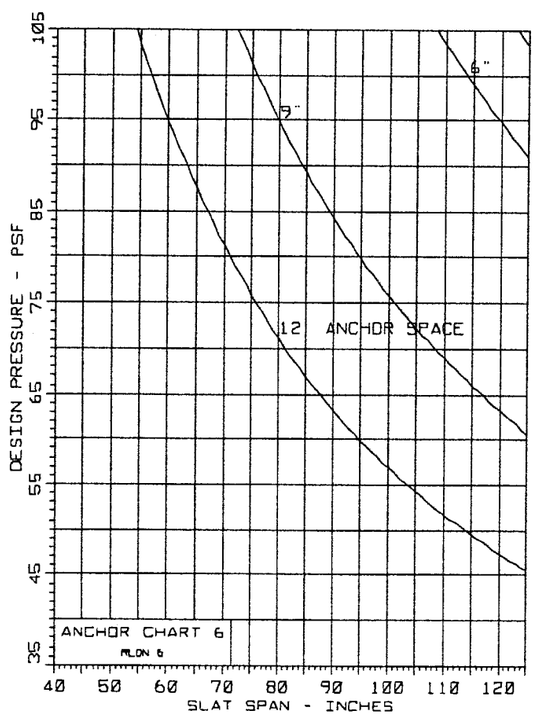

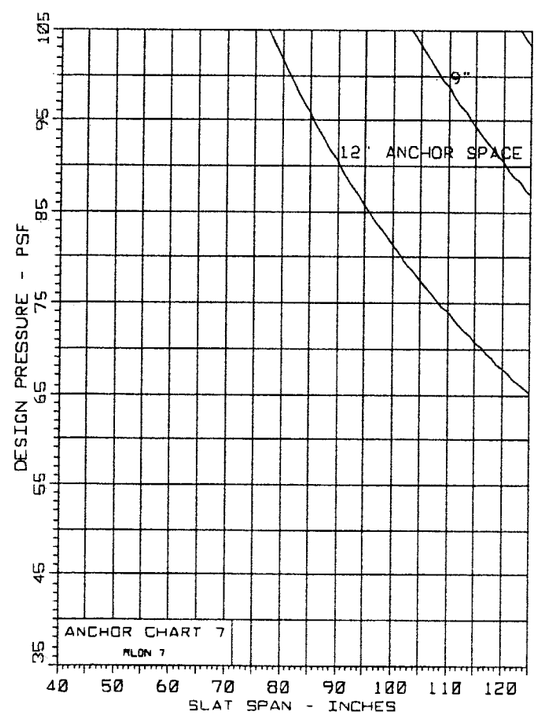

FASTENER SPACING IN MASONRY					
CHARTS ARE BASED ON TYPICAL EDGE DISTANCE = 12d. FOR LESSER EDGE DISTANCE DECREASE SPACING BY MULTIPLYING WITH THE FACTOR BELOW					
EDGE DIST.	12d=3"	10d=2-1/2"	8d=2"	6d=1-1/2"	5d=1-1/4"
FACTOR	1.00	0.86	0.71	0.57	0.50
EXAMPLE: FOR 3" EDGE DIST. SPACING = 12" O.C. (FROM CHART) FOR 2" EDGE DIST. SPACING = 12 X .71 = 8.5 O.C.					

TYPICAL EDGE DISTANCE IN WOOD = 1-1/4"
NO REDUCTION FACTOR IS REQUIRED

TYPICAL ANCHORS

ANCHOR (A) = 1/4" TAPCON BY ELCO.
1-3/4" EMBEDMENT TO CONCRETE
1-1/4" EMBEDMENT TO BLOCK

ANCHOR (C) = 1/4" X 1-1/4" HILTI METAL HIT ANCHORS
WITH ZAMAK BODY
OR RAWL ZAMAK NAILIN
1" EMBEDMENT TO CONC. OR BLOCK

ANCHOR (D) = 1/4" RAWL CALK-IN, STAR 'TAMPIN' OR EQUAL.
TOTAL ANCHOR BODY INTO CONC. OR BLOCK

ANCHOR (E) = #14 S.M.S./LAG SCREWS INTO WOOD. (S.G.= 0.47)
1-1/2" MIN. PENETRATION.

NOTE: ANCHORS, USE FULL EMBEDMENT IN CONCRETE BEYOND THE COVERING (STUCCO, TILES, ETC.)

Engr: DR. HUMAYOUN FAROOQ
STRUCTURES
FLA. PE # 16557
C.A.N. 3538

FEB 17 2003

PRODUCT REVISED
as complying with the Florida Buiding Code
Acceptance No 03-0123.07
Expiration Date 02/27/2008
By Helmy A. Melek
Miami Dade Product Control Division

a f c

AL-FAROOQ CORPORATION
ENGINEERS, PLANNERS & PRODUCT TESTING
1235 SW 87 AVE
MIAMI, FLORIDA 33174
(305) 264-8100

ACCORDION\RN196-19

ACCORDION SHUTTER DETAILS

ROLLADEN INC.
550 ANSIN BOULEVARD
HALLANDALE, FL. 33009
(305) 757 - 8591

revisions:

no	date	by	description

date: 04-25-96
scale: 1/2" = 1"
design by:
drawn by: HAMID
checked by:

drawing no.
96-19

sheet 5 of 5