MIAMI-DADE

BUILDING CODE COMPLIANCE OFFICE (BCCO)
PRODUCT CONTROL DIVISION

MIAMI-DADE COUNTY, FLORIDA
METRO-DADE FLAGLER BUILDING
140 WEST FLAGLER STREET, SUITE 1603
MIAMI, FLORIDA 33130-1563
(305) 375-2901 FAX (305) 375-2908

NOTICE OF ACCEPTANCE (NOA)

Rollingshield, Inc.
2500 NW 74th Ave.
Miami, FL 33122

SCOPE:
This NOA is being issued under the applicable rules and regulations governing the use of construction materials. The documentation submitted has been reviewed by Miami-Dade County Product Control Division and accepted by the Board of Rules and Appeals (BORA) to be used in Miami Dade County and other areas where allowed by the Authority Having Jurisdiction (AHJ).

This NOA shall not be valid after the expiration date stated below. The Miami-Dade County Product Control Division (In Miami Dade County) and/or the AHJ (in areas other than Miami Dade County) reserve the right to have this product or material tested for quality assurance purposes. If this product or material fails to perform in the accepted manner, the manufacturer will incur the expense of such testing and the AHJ may immediately revoke, modify, or suspend the use of such product or material within their jurisdiction. BORA reserves the right to revoke this acceptance, if it is determined by Miami-Dade County Product Control Division that this product or material fails to meet the requirements of the applicable building code.
This product is approved as described herein, and has been designed to comply with the High Velocity Hurricane Zone of the Florida Building Code.

DESCRIPTION: Extruded Aluminum 60mm Roll-Up Shutter

APPROVAL DOCUMENT: Drawing No. 02-534, titled "60mm Slat Roll-Up Shutters", prepared by Tilteco, Inc. dated 11/05/02, with last revision on 11/05/02, sheets 1 through 16 of 16 including 3A, 5A & 14A bearing the Miami-Dade County Product Control Revision stamp with the Notice of Acceptance number and expiration date by the Miami-Dade County Product Control Division.

MISSILE IMPACT RATING: Large and Small Missile Impact

LABELING: Each unit shall bear a permanent label with the manufacturer's name or logo, city, state and the following statement: "Miami-Dade County Product Control Approved", unless otherwise noted herein.

RENEWAL of this NOA shall be considered after a renewal application has been filed and there has been no change in the applicable building code negatively affecting the performance of this product.

TERMINATION of this NOA will occur after the expiration date or if there has been a revision or change in the materials, use, and/or manufacture of the product or process. Misuse of this NOA as an endorsement of any product, for sales, advertising or any other purposes shall automatically terminate this NOA. Failure to comply with any section of this NOA shall be cause for termination and removal of NOA.

ADVERTISEMENT: The NOA number preceded by the words Miami-Dade County, Florida, and followed by the expiration date may be displayed in advertising literature. If any portion of the NOA is displayed, then it shall be done in its entirety.

INSPECTION: A copy of this entire NOA shall be provided to the user by the manufacturer or its distributors and shall be available for inspection at the job site at the request of the Building Official.
This NOA **revises NOA # 00-0823.05** and consists of this page 1, evidence page as well as approval document mentioned above.
The submitted documentation was reviewed by **Candido F. Font, P.E.**

11/07/03

PRODUCT CONTROL ACCEPTED

NOTICE OF ACCEPTANCE: EVIDENCE PAGE

A. DRAWING

1. Drawing No. 02-534, "60mm Slat Roll-Up Shutter", Sheets 1 through 16 including 3A, 5A & 14A of 16, prepared by Tilteco, Inc., dated 11/05/02, with last revision on 11/05/02, signed and sealed by W. A. Tillit Jr. PE.

B. TEST

1. Test report on Uniform Static Air Pressure Test per PA 202, Large Missile Impact Test per PA 201 & Cyclic Wind Pressure Test per PA 203 of Series CD40, Aluminum Roll Up Shutters, prepared by Fenestration Testing Laboratory, Inc., Report No. 2606 dated 04/25/2000, signed and sealed by A. P. Gonzalez, PE.
2. Test report on Large Missile Impact Test per PA 201, of Aluminum Storm Bar, prepared by Fenestration Testing Laboratory, Inc., Report No. 2642, dated 07/25/2000, signed and sealed by A. P. Gonzalez, PE.
3. Test report on Simple Loading Test, of Aluminum Storm Bar, prepared by Fenestration Testing Laboratory, Inc., Report No 3013, dated 03/13/2001, signed and sealed by A. Acevedo, PE.
4. Test report on Impact Test per ASTM D 256, Flexural Test per ASTM D790 & Tensile Test per ASTM D638 of plastic sample, Report No. CTL 0410G, dated 04/04&09/2001, signed and sealed by R. Patel PE.

C. CALCULATIONS

1. Comparative analysis for slats; storm bars, headers, tracks, mullions and anchors, using rational analysis dated 05/01/00, pages 1 through 172 of 172, prepared by Tilteco, Inc. signed and sealed by W. A. Tillit, PE.
2. Comparative analysis of Storm Bars w/Spring Loaded System using rational analysis pages 1 through 12 of 12, prepared by Tilteco, Inc, signed and sealed by W. A. Tillit, PE on 05/03/01

D. QUALITY ASSURANCE

1. Miami-Dade Product Control Office.

E. MATERIAL CERTIFICATION

1. Tensile report of Tensile test per ASTM B 557 of Flat Reduced Section, prepared by ATC Associates, Inc., on 02/14/2000, signed and sealed by S.E. Black, PE.

F. STATEMENTS.

1. Letter of Compliance issued by Tilteco, Inc. on 08/17/2000, signed by W. A. Tillit, PE.
2. Letter of No financial Interest issued by Tilteco, Inc. on 08/14/00, signed by W. A. Tillit, PE.
3. Letters of Test Compliance issued by Fenestration Testing Laboratory, Inc., on 07/25/00 & 07/13/00, signed and sealed by A. P. Gonzalez, PE.
4. Letter of Test Clarification issued by Fenestration Testing Laboratory, Inc. on 04/10/2001, signed by R. Zavala and signed and sealed by A. P. Gonzalez, PE.
5. Assignment letter issued by Rolling Shield, Inc. on 08/20/2001, signed by J.A. Delgado from Rolling Shield, Inc. and F. Tonda from National Shutter Association, Inc.
6. Letter of Partial changes issued by Tilteco Inc. on 05/28/03 signed and sealed by W. A. Tillit Jr. PE.
7. Release letter issued by National Shutter Association, Inc on 09/15/03 and signed by J. A. Delgado.
8. Conformance letter issued by Rollingshield Parts, Inc on 09/15/03 and signed by J. A. Delgado.

11/07/03

Candido F. Font, P. E.
Senior Product Control Examiner
NOA No 03-0123.11
Expiration Date: June 7, 2004
Approval Date: November 7, 2003

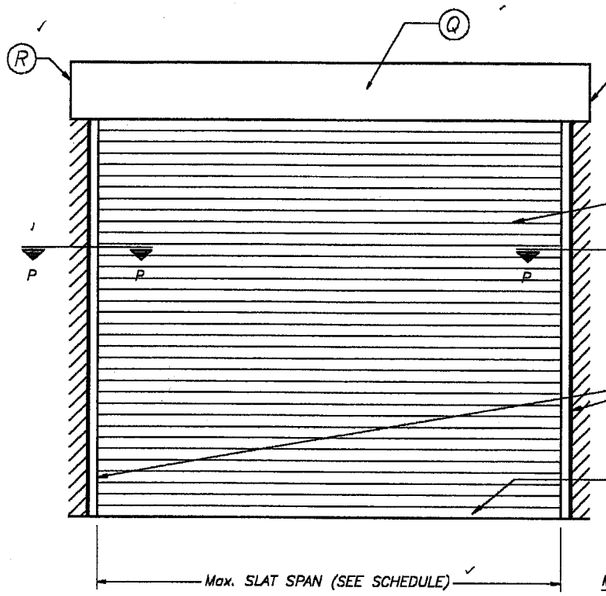

TYPICAL SINGLE UNIT ELEVATION (NO STORM BARS REQUIRED)

NOTE: SEE SHEET 2 & 3 OF 16 FOR COMPONENTS NOMENCLATURE.

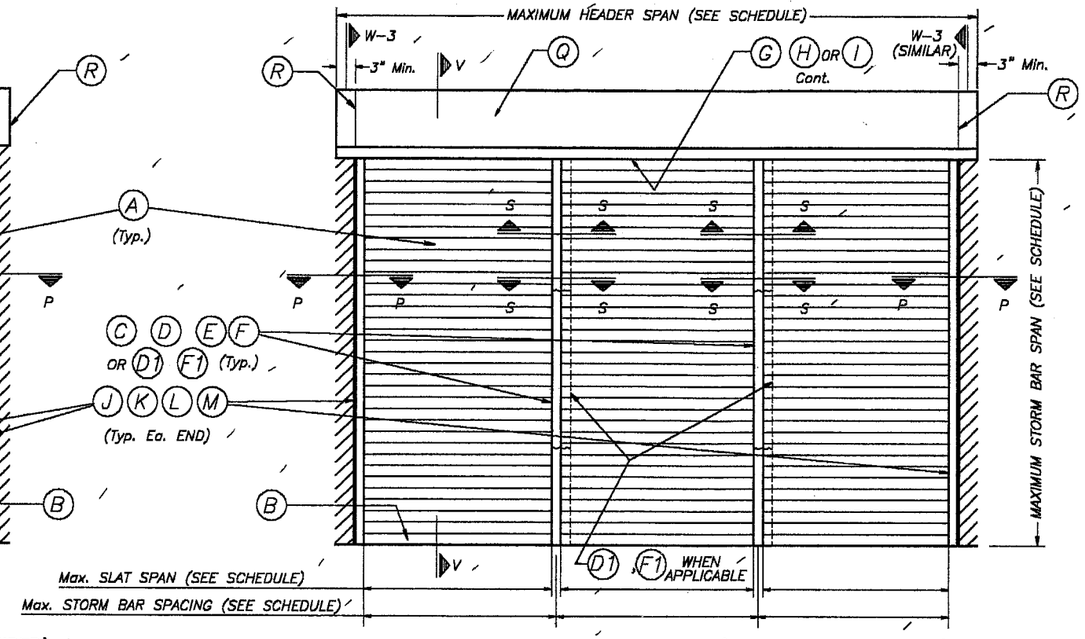

TYPICAL MULTIPLE UNIT ELEVATION (STORM BARS REQUIRED)

NOTE: SEE SHEET 2 & 3 OF 16 FOR COMPONENTS NOMENCLATURE.

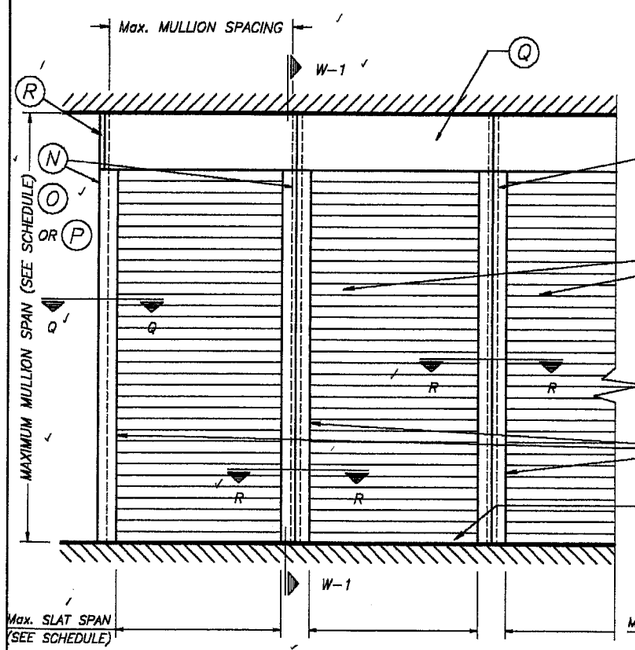

TYPICAL CONSECUTIVE SINGLE UNIT ELEVATION (NO STORM BARS REQUIRED)

NOTE: SEE SHEET 2 & 3 OF 16 FOR COMPONENTS NOMENCLATURE.

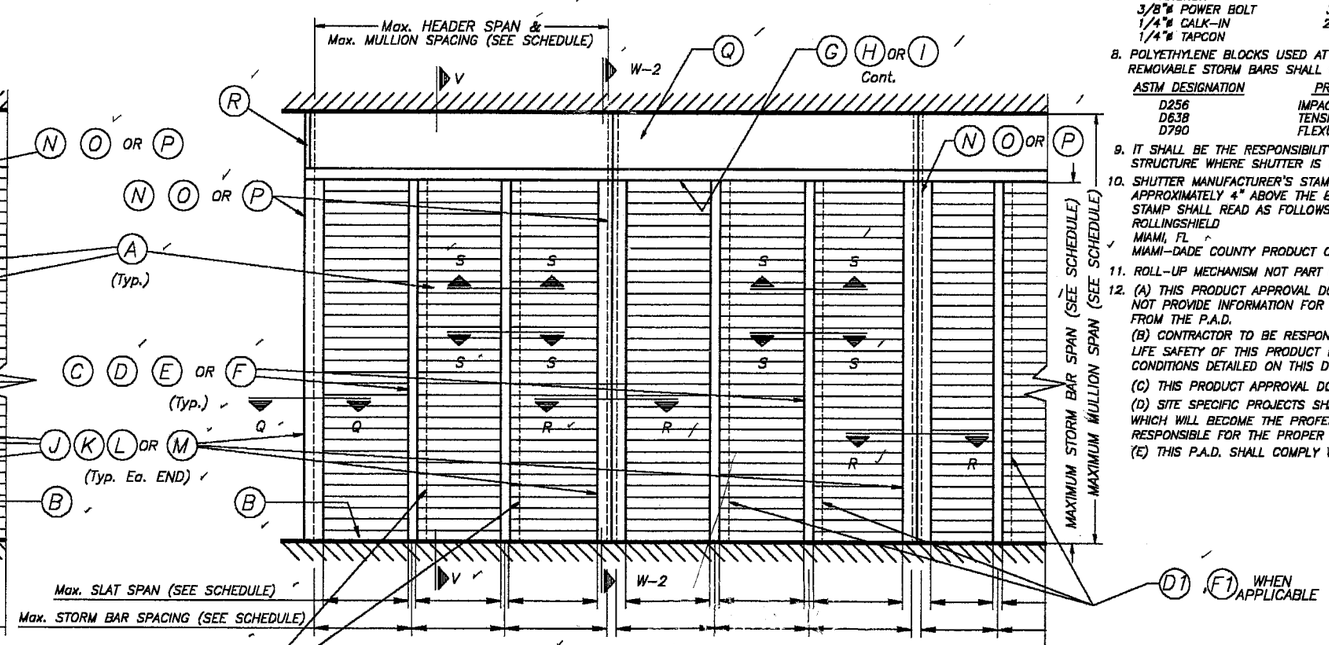

TYPICAL CONSECUTIVE MULTIPLE UNIT ELEVATION (STORM BARS REQUIRED)

NOTE: SEE SHEET 2 & 3 OF 16 FOR COMPONENTS NOMENCLATURE.

D1 F1 WHEN APPLICABLE

NOTE:
SEE SECTIONS ON
SHEETS 4 THRU 10.

GENERAL NOTES:

1. ROLL-UP SHUTTERS SHOWN ON THIS PRODUCT APPROVAL DOCUMENT (P.A.D.) HAS BEEN VERIFIED FOR COMPLIANCE IN ACCORDANCE WITH THE 2001 EDITION OF THE FLORIDA BUILDING CODE.
   DESIGN WIND LOADS SHALL BE DETERMINED AS PER SECTION 1619 OF THE ABOVE MENTIONED CODE, FOR A BASIC WIND SPEED OF 146 m.p.h., AND IN ACCORDANCE W/ ASCE 7-98 STANDARD.
   ROLL-UP SHUTTER'S ADEQUACY FOR IMPACT AND FATIGUE RESISTANCE HAS BEEN VERIFIED IN ACCORDANCE WITH SECTION 1606.1.4 OF THE ABOVE MENTIONED CODE AS PER FENESTRATION TESTING LAB. REPORTS # 2639, 2606, 2637, 2640, 2641, 2642, 2736, 2737 & 3013 AS PER PA-201, PA-202 AND PA-203.
2. ALL ALUMINUM EXTRUSIONS SHALL BE 6063-T6 ALLOY (UNLESS OTHERWISE NOTED).
3. ALL SCREWS TO BE STAINLESS STEEL 304 OR 316 SERIES W/50 ksi YIELD POINT AND 90 ksi TENSILE STRENGTH.
4. BOLTS TO BE 2024-T4 ALUMINUM ALLOY, GALVANIZED OR STAINLESS STEEL WITH 36 ksi MINIMUM YIELD POINT.
5. STORM BARS AT FLOOR OR CEILING MOUNTING INSTALLATIONS MAY BE REMOVABLE AT NON HURRICANE CONDITIONS. HOWEVER, EACH STORM BAR SHALL BEAR A PERMANENT LABEL IN A VISIBLE PLACE WITH A WARNING NOTE INSTRUCTING THE TENANT OR OWNER THAT STORM BARS MUST BE INSTALLED WITH CORRESPONDING HARDWARE DURING PERIODS OF HURRICANE WARNING AND THAT ROLL UP SHUTTERS WILL NOT OFFER HURRICANE PROTECTION UNLESS ALL STORM BARS ARE INSTALLED AS DIRECTED.
6. REMOVABLE STORM BARS SHALL BE STORED IN A CONSPICUOUS PLACE WITH EASY AND IMMEDIATE ACCESS SO THAT THEY CAN BE REACHED AND INSTALLED ANY TIME (HURRICANE CONDITIONS OR NOT) SLATS ARE ROLLED DOWN. THE EFFECT OF THE SLATS ROLLED DOWN WITHOUT STORM BARS IS: THOSE SLATS WILL SLIP OUT OF TRACK DUE TO THE DEFLECTION CAUSED BY WIND FORCES.
7. ANCHORS TO WALL FOR SIDE RAILS & BOX CONNECTION SHALL BE AS FOLLOWS: (UNLESS OTHERWISE NOTED)
   (A) TO EXISTING POURED CONCRETE: MIN. 3000 p.s.i. COMPRESSIVE STRENGTH.
   -1/4" # TAPCON ANCHORS AS MANUFACTURED BY I.T.W./BUILDEX OR ELCO TEXTRON.
   NOTES:
   A.1) MINIMUM EMBEDMENT OF TAPCON ANCHORS INTO POURED CONCRETE SHALL BE 1 3/4". NO EMBEDMENT INTO STUCCO SHALL BE CONSIDERED AS PART OF THE REQUIRED EMBEDMENT.
   A.2) IN CASE THAT PRECAST STONE, PRECAST CONCRETE PANELS, OR PAVERS BE FOUND ON THE EXISTING WALL OR FLOOR, ANCHORS SHALL BE LONG ENOUGH TO REACH THE MAIN STRUCTURE BEHIND SUCH PANELS.
   (B) TO EXISTING CONCRETE BLOCK WALL:
   -1/4" # TAPCON ANCHORS, AS MANUFACTURED BY I.T.W./BUILDEX OR ELCO TEXTRON.
   NOTES:
   B.1) MINIMUM EMBEDMENT OF TAPCON ANCHORS, INTO THE CONCRETE BLOCK UNIT SHALL BE 1 1/4".
   B.2) IN CASE THAT PRECAST STONE OR PRECAST CONCRETE PANELS BE FOUND ON THE EXISTING WALL, ANCHORS SHALL BE LONG ENOUGH TO REACH THE MAIN STRUCTURE BEHIND SUCH PANELS.
   (C) ANCHORS SHALL BE INSTALLED FOLLOWING ALL OF THE RECOMENDATIONS AND SPECIFICATIONS OF THE ANCHOR'S MANUFACTURER.
   (D) ANCHORS REQUIRED FOR STORM BARS, HEADERS & MULLION COONECTIONS SHALL BE AS SPECIFIED ON APPLICABLE SECTIONS SHOWN ON SHEETS 5, 6, 7, 8 & 10 OF 16 RESPECTIVELY.
   POWER BOLTS & CALK-IN ANCHORS TO BE AS MANUFACTURED BY POWERS FASTENING, INC.
   MINIMUM EDGE DISTANCE AND SPACING FOR ABOVE MENTIONED ANCHORS SHALL BE AS INDICATED BELOW OR AT ABOVE MENTIONED SHEETS, WHICHEVER IS LARGER (MORE CRITICAL).

ANCHOR	SPACING	EDGE DISTANCE
3/8"# POWER BOLT	3 3/4"	4 1/2"
1/4"# CALK-IN	2 1/2"	3"
1/4"# TAPCON	3"	2 1/2"

8. POLYETHYLENE BLOCKS USED AT SPRING LOADED SYSTEM FOR REMOVABLE STORM BARS SHALL COMPLY W/THE FOLLOWING SPECIFICATIONS:

ASTM DESIGNATION	PROPERTIES	VALUE
D256	IMPACT RESISTANCE	7.95 FT-Lb/in (AVERAGE)
D638	TENSILE CAPACITY	4243 psi (AVERAGE)
D790	FLEXURAL CAPACITY	1012 psi (AVERAGE)

9. IT SHALL BE THE RESPONSIBILITY OF THE CONTRACTOR TO VERIFY THE SOUNDNESS OF THE STRUCTURE WHERE SHUTTER IS TO BE ATTACHED TO INSURE PROPER ANCHORAGE.
10. SHUTTER MANUFACTURER'S STAMP SHALL BE PLACED ON THE EXPOSED SURFACE OF THE SIDE RAIL APPROXIMATELY 4" ABOVE THE BOTTOM OF SUCH RAIL.
    STAMP SHALL READ AS FOLLOWS:
    ROLLINGSHIELD
    MIAMI, FL
    MIAMI-DADE COUNTY PRODUCT CONTROL APPROVED.
11. ROLL-UP MECHANISM NOT PART OF THIS APPROVAL, BUT SHALL BE CERTIFIED BY AN INDEPENDENT TESTING AGENCY.
12. (A) THIS PRODUCT APPROVAL DOCUMENT (P.A.D.) PREPARED BY THIS ENGINEER IS GENERIC AND DOES NOT PROVIDE INFORMATION FOR A SITE SPECIFIC PROJECT; i.e. WHERE THE SITE CONDITIONS DEVIATE FROM THE P.A.D.
    (B) CONTRACTOR TO BE RESPONSIBLE FOR THE SELECTION, PURCHASE AND INSTALLATION INCLUIDING LIFE SAFETY OF THIS PRODUCT BASED ON THIS P.A.D. PROVIDED HE/SHE DOES NOT DEVIATE FROM THE CONDITIONS DETAILED ON THIS DOCUMENT. CONSTRUCTION SAFETY AT SITE IS THE CONTRACTOR'S RESPONSIBILITY.
    (C) THIS PRODUCT APPROVAL DOCUMENT WILL BE CONSIDERED INVALID IF MODIFIED.
    (D) SITE SPECIFIC PROJECTS SHALL BE PREPARED BY A FLORIDA REGISTERED ENGINEER OR ARCHITECT WHICH WILL BECOME THE PROFESSIONAL OF RECORD (P.O.R) FOR THE PROJECT AND WHO WILL BE RESPONSIBLE FOR THE PROPER USE OF THE P.A.D.
    (E) THIS P.A.D. SHALL COMPLY WITH SECTION 2: 61G15 OF THE FLORIDA ADMINISTRATIVE CODE.

PRODUCT REVISED
as complying with the Florida
Building Code
Acceptance No. 03-0123.11
Expiration Date 06/07/04
By
Miami Dade Product Control
Division

F.B.C. (H.V.H.Z.) / MIAMI-DADE COUNTY

JUN 0 3 2003

TILTECO INC.
TILLIT TESTING & ENGINEERING COMPANY
6595 N.W. 36th. St., Sta. 217 - VIRGINIA GARDENS, Fl. 33166
Phone : (305)871-1530 . Fax : (305)871-1531
EB-0006719
WALTER A. TILLIT Jr., P. E.
FLORIDA Lic. # 44167

60mm SLAT ROLL-UP SHUTTER

ROLLINGSHIELD, INC.
2500 N.W. 74th AVENUE
MIAMI, FLORIDA 33122

REV. No	DESCRIPTION	DATE	REV. No	DESCRIPTION	DATE
1	OLD 00-176	11/5/02	3	-	-
2	-	-	4	-	-

AS SHOWN
SCALE

11/5/02
DATE

02-534
DRAWING No

SHEET 1 OF 16

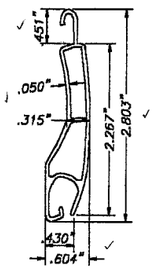

(A) TYPE 1 SLAT:
EXTRUDED ALUMINUM SLAT
6063-T6 ALUMINUM ALLOY
SCALE: 1/2" = 1"

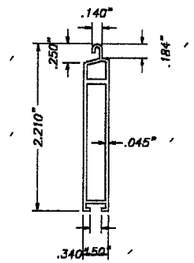

(B) TYPE 2 SLAT:
EXTRUDED ALUMINUM BOTTOM SLAT
6063-T6 ALUMINUM ALLOY
SCALE: 1/2" = 1"

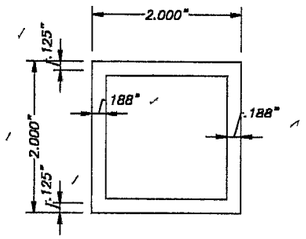

(C) TYPE 1 STORM BAR:
2" EXTRUDED STORM BAR
6063-T6 ALUMINUM ALLOY
SCALE: 1/2" = 1"

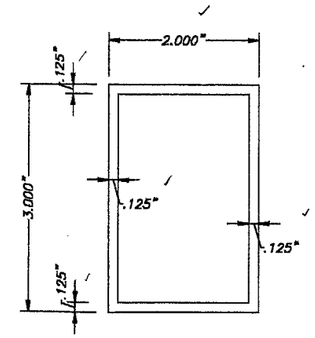

(D) TYPE 2 STORM BAR:
3" EXTRUDED STORM BAR
6063-T6 ALUMINUM ALLOY
SCALE: 1/2" = 1"

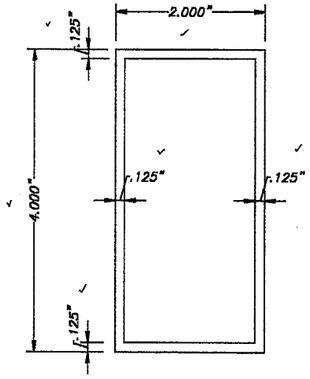

(E) TYPE 3 STORM BAR:
4" EXTRUDED STORM BAR
6063-T6 ALUMINUM ALLOY
SCALE: 1/2" = 1"

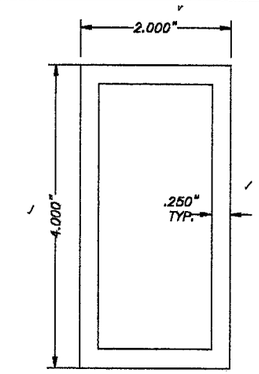

(F) TYPE 4 STORM BAR:
4" HEAVY EXTRUDED STORM BAR
6063-T6 ALUMINUM ALLOY
SCALE: 1/2" = 1"

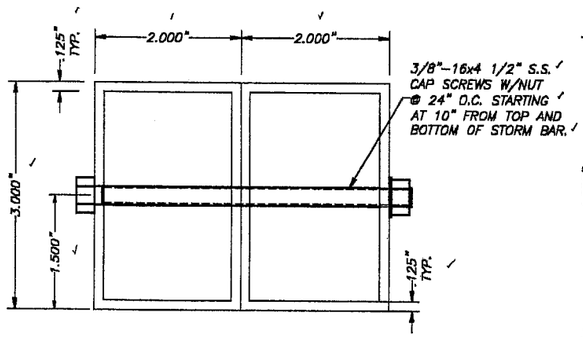

(D1) TYPE 5 STORM BAR:
EXTRUDED STORM BAR
6063-T6 ALUMINUM ALLOY
SCALE: 1/2" = 1"

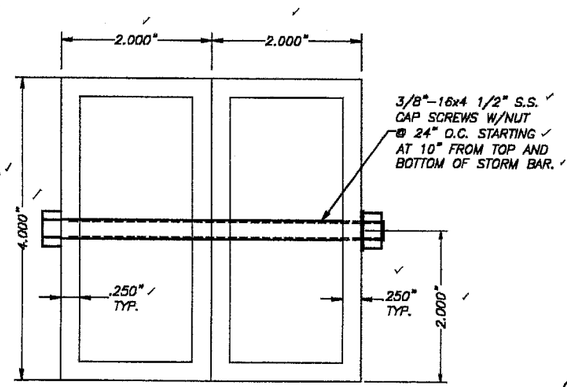

(F1) TYPE 6 STORM BAR:
4" HEAVY EXTRUDED STORM BAR
6063-T6 ALUMINUM ALLOY
SCALE: 1/2" = 1"

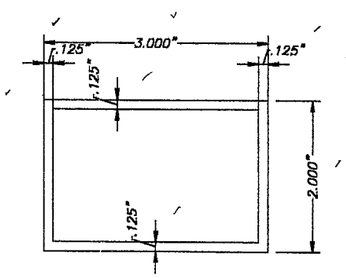

(G) HEADER TYPE 1:
6063-T6 ALUMINUM ALLOY
SCALE: 1/2" = 1"

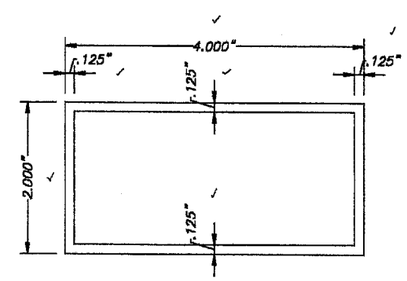

(H) HEADER TYPE 2:
6063-T6 ALUMINUM ALLOY
SCALE: 1/2" = 1"

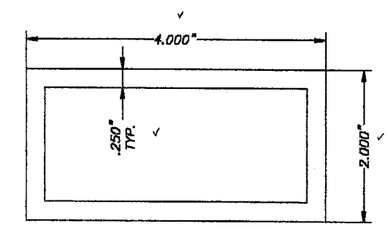

(I) HEADER TYPE 3:
6063-T6 ALUMINUM ALLOY
SCALE: 1/2" = 1"

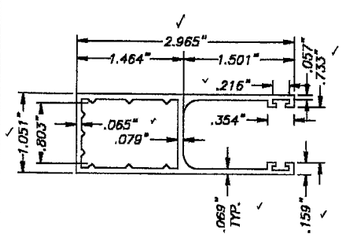

(J) TYPE 1
SIDE RAIL:
6063-T6 Alum. ALLOY
SCALE: 1/2" = 1"

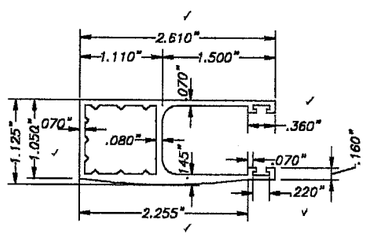

(K) TYPE 2
SIDE RAILS:
6063-T6 Alum. ALLOY
SCALE: 1/2" = 1"

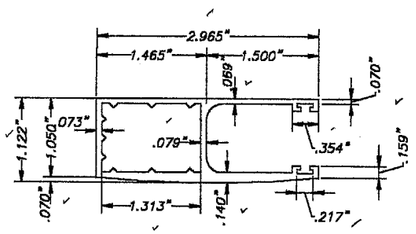

(L) TYPE 3
SIDE RAIL:
6063-T6 Alum. ALLOY
SCALE: 1/2" = 1"

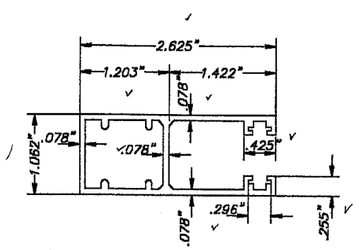

(M) TYPE 4
SIDE RAIL:
6063-T6 Alum. ALLOY
SCALE: 1/2" = 1"

PRODUCT REVISED
as complying with the Florida Building Code
Acceptance No. 03-0123.11
Expiration Date 06/07/04
By
Miami Dade Product Control Division

F.B.C. (H.V.H.Z.) / MIAMI-DADE COUNTY

JUN 03 2003

TILTECO INC.
TILLIT TESTING & ENGINEERING COMPANY
6595 N.W. 36th. St., Ste. 217 – VIRGINIA GARDENS, Fl. 33166
Phone : (305)871-1530 . Fax : (305)871-1531
EB-0006719
WALTER A. TILLIT Jr., P. E.
FLORIDA Lic. # 44167

60mm SLAT ROLL-UP SHUTTER

ROLLINGSHIELD, INC.
2500 N.W. 74th AVENUE
MIAMI, FLORIDA 33122

REV. No	DESCRIPTION	DATE	REV. No	DESCRIPTION	DATE
1	OLD 00-176	11/6/02	3	–	–
2	–	–	4	–	–

AS SHOWN
SCALE

11/5/02
DATE

02-534
DRAWING No

SHEET 2 OF 16

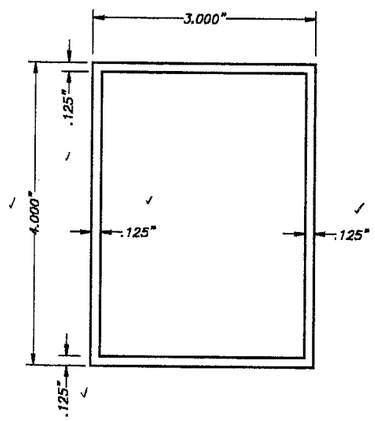

(N) TYPE 1 MULLION:
4" EXTRUDED MULLION
6063-T6 ALUMINUM ALLOY
SCALE: 1/2" = 1"

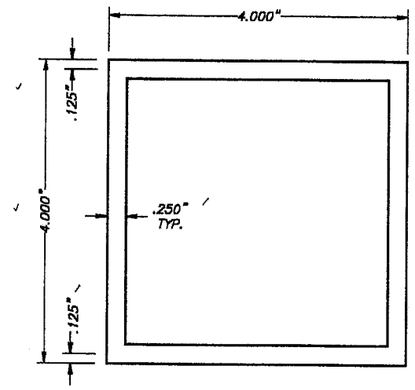

(O) TYPE 2 MULLION:
5" EXTRUDED MULLION
6063-T6 ALUMINUM ALLOY
SCALE: 1/2" = 1"

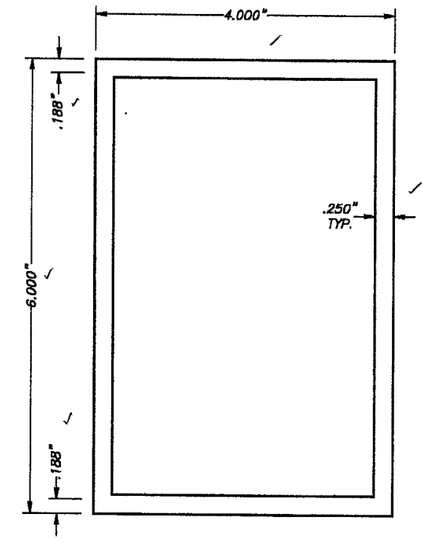

(P) TYPE 3 MULLION:
6" EXTRUDED MULLION
6063-T6 ALUMINUM ALLOY
SCALE: 1/2" = 1"

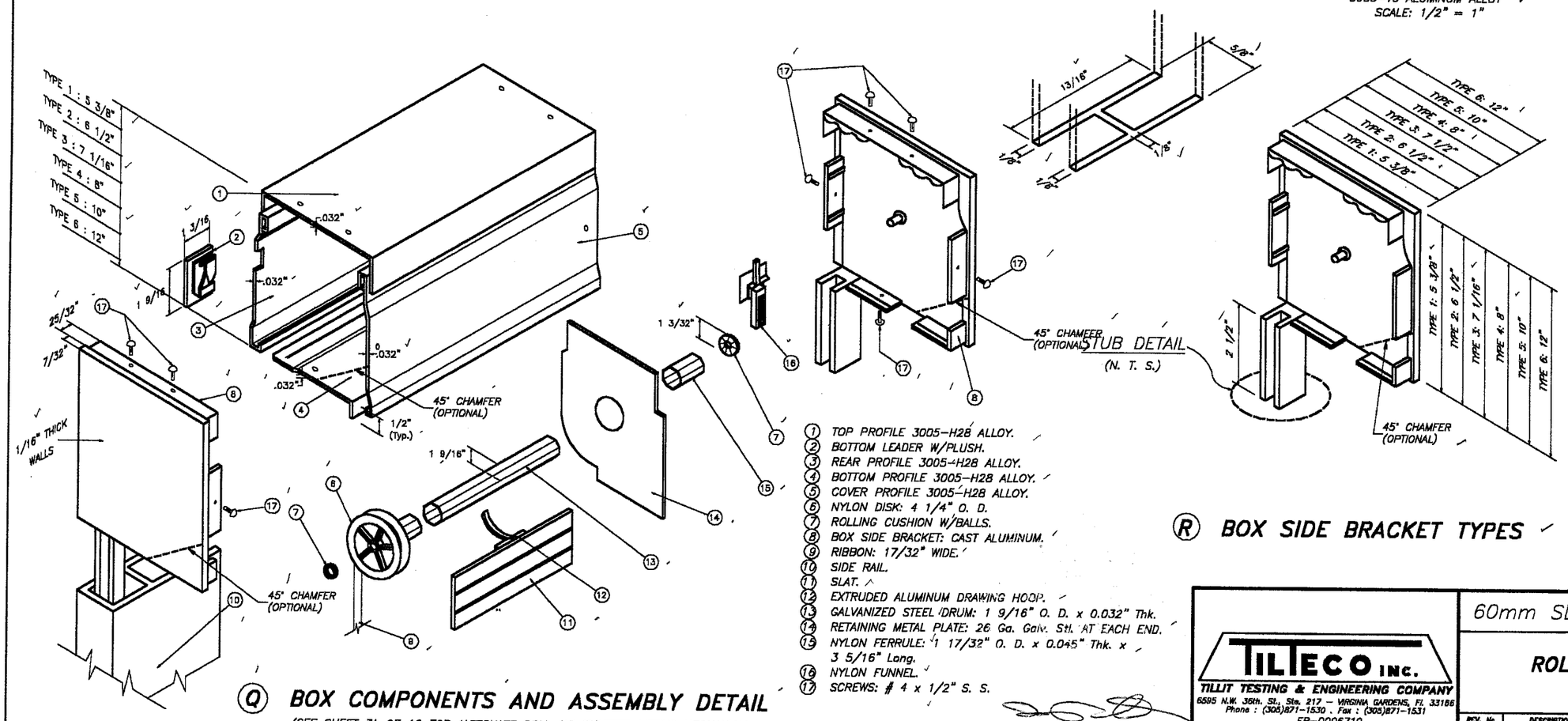

1. TOP PROFILE 3005-H28 ALLOY.
2. BOTTOM LEADER W/PLUSH.
3. REAR PROFILE 3005-H28 ALLOY.
4. BOTTOM PROFILE 3005-H28 ALLOY.
5. COVER PROFILE 3005-H28 ALLOY.
6. NYLON DISK: 4 1/4" O. D.
7. ROLLING CUSHION W/BALLS.
8. BOX SIDE BRACKET: CAST ALUMINUM.
9. RIBBON: 17/32" WIDE.
10. SIDE RAIL.
11. SLAT.
12. EXTRUDED ALUMINUM DRAWING HOOP.
13. GALVANIZED STEEL DRUM: 1 9/16" O. D. x 0.032" Thk.
14. RETAINING METAL PLATE: 26 Ga. Galv. Stl. AT EACH END.
15. NYLON FERRULE: 1 17/32" O. D. x 0.045" Thk. x 3 5/16" Long.
16. NYLON FUNNEL.
17. SCREWS: # 4 x 1/2" S. S.

(Q) BOX COMPONENTS AND ASSEMBLY DETAIL
(SEE SHEET 3A OF 16 FOR ALTERNATE ROLL-UP SHUTTER LIFTING MECHANISMS)

(R) BOX SIDE BRACKET TYPES

PRODUCT REVISED
as complying with the Florida Building Code
Acceptance No. 03-0123.11
Expiration Date 06/07/09
By
Miami Dade Product Control Division

JUN 03 2003

F.B.C. (H.V.H.Z.) / MIAMI-DADE COUNTY

TILTECO INC.
TILLIT TESTING & ENGINEERING COMPANY
6595 N.W. 36th. St., Sts. 217 – VIRGINIA GARDENS, FL 33166
Phone : (305)871-1530 . Fax : (305)871-1531
EB-0006719
WALTER A. TILLIT Jr., P. E.
FLORIDA Lic. # 44167

60mm SLAT ROLL-UP SHUTTER

ROLLINGSHIELD, INC.
2500 N.W. 74th AVENUE
MIAMI, FLORIDA 33122

REV. No	DESCRIPTION	DATE	REV. No	DESCRIPTION	DATE
1	OLD 00-176	11/5/02	3	–	–
2	–	–	4	–	–

AS SHOWN SCALE
11/5/02 DATE
02-534 DRAWING No
SHEET 3 OF 16

TYPE DRIVE ROLL-UP SHUTTER SYSTEM

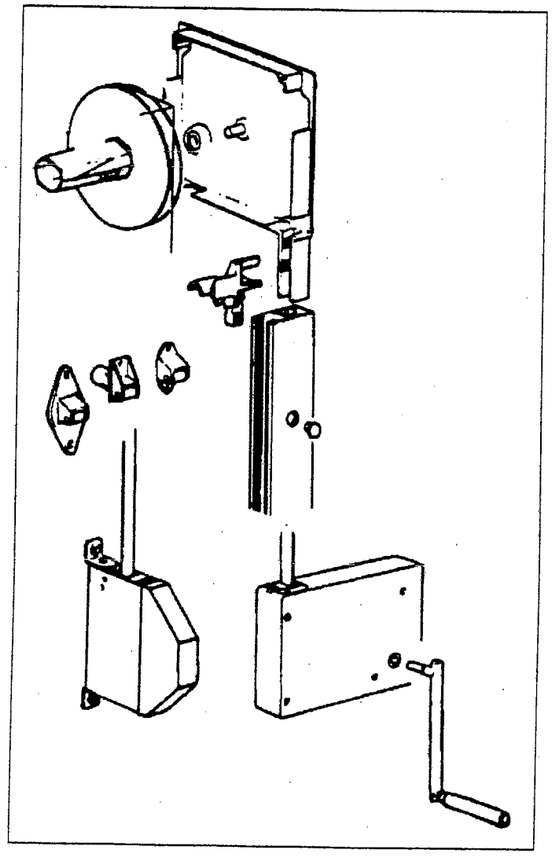

MOTORIZED ROLL-UP SHUTTER SYSTEM

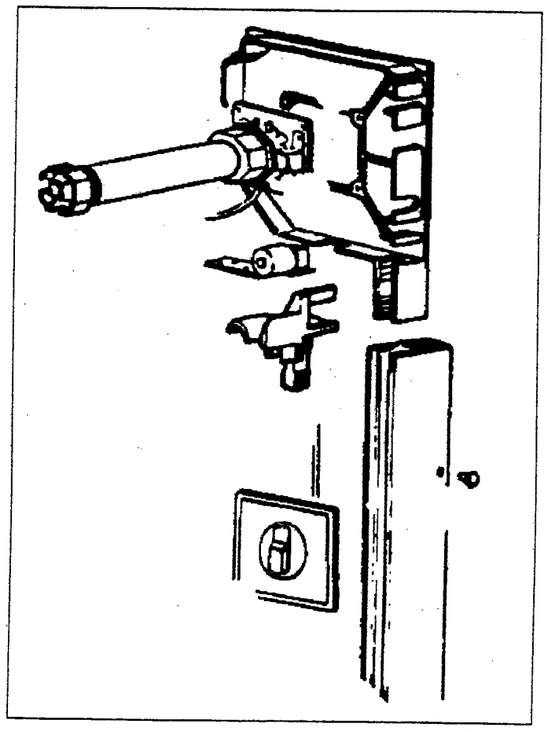

HAND CRANK ROLL-UP SHUTTER SYSTEM

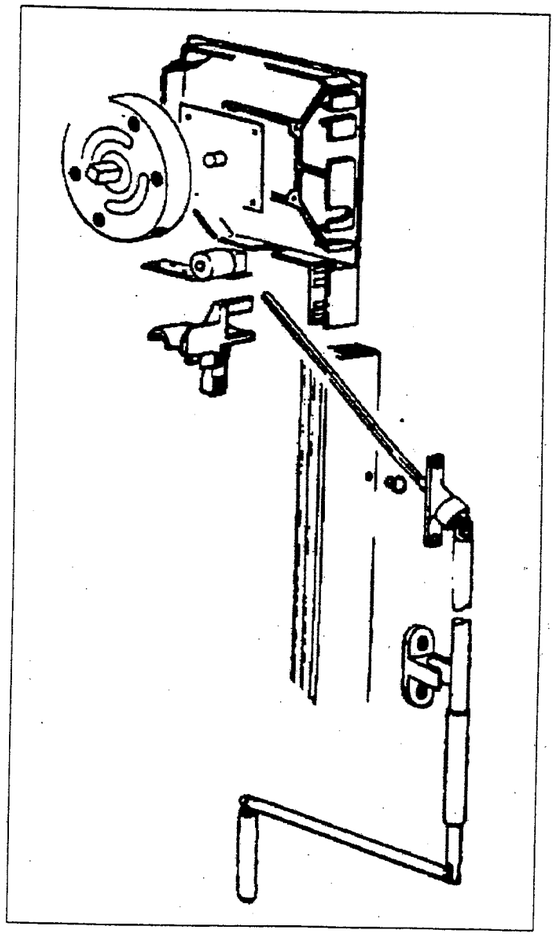

ALTERNATE ROLL-UP SHUTTER LIFTING MECHANISMS

PRODUCT REVISED
as complying with the Florida
Building Code
Acceptance No. 03-0123.11
Expiration Date 06/07/04
By
Miami Dade Product Control
Division

F.B.C. (H.V.H.Z.) / MIAMI-DADE COUNTY

JUN 03 2003

TILTECO INC.
TILLIT TESTING & ENGINEERING COMPANY
6595 N.W. 36th. St., Ste. 217 – VIRGINIA GARDENS, FL 33166
Phone : (305)871-1530 . Fax : (305)871-1531
EB-0006719
WALTER A. TILLIT Jr., P. E.
FLORIDA Lic. # 44167

60mm SLAT ROLL-UP SHUTTER

ROLLINGSHIELD, INC.
2500 N.W. 74th AVENUE
MIAMI, FLORIDA 33122

REV. No	DESCRIPTION	DATE	REV. No	DESCRIPTION	DATE
1	OLD 00-176	11/5/02	3	–	–
2	–	–	4	–	–

AS SHOWN
SCALE

11/5/02
DATE

02-534
DRAWING No

SHEET 3A OF 16

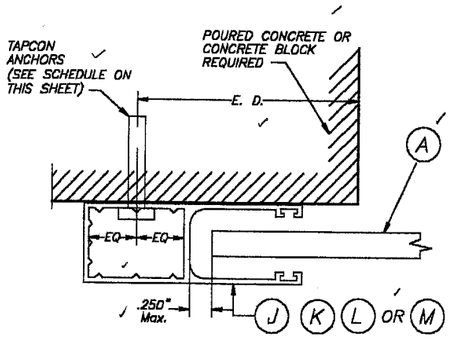

SECTION P – P (1) : WALL MOUNT

SCALE: 1/2" = 1"

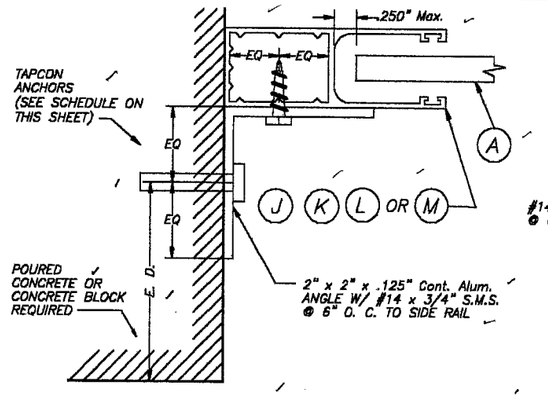

SECTION P – P (2) : SIDE WALL MOUNT

SCALE: 1/2" = 1"

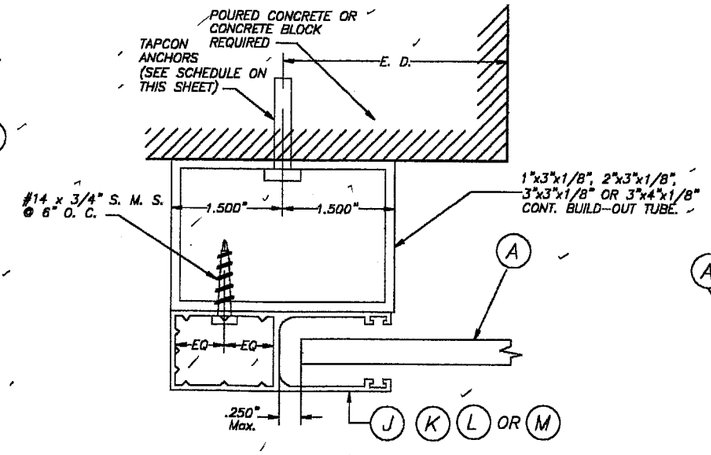

SECTION P – P (3) : BUILD-OUT MOUNT

SCALE: 1/2" = 1"

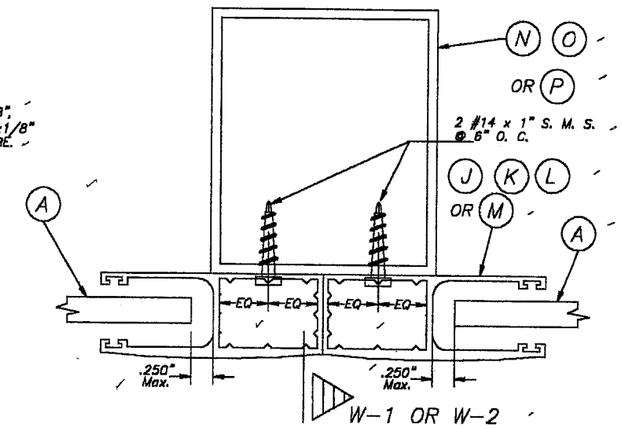

SECTION R – R : MULLION MOUNT (FACE MOUNT)

SCALE: 1/2" = 1"

SIDE RAIL ANCHOR SCHEDULE
MAXIMUM DESIGN PRESSURE RATING "W" (p. s. f.) AND CORRESPONDING MAXIMUM ANCHOR SPACING(in) * FOR SIDE RAILS (J), (K), (L) & (M) CONNECTION TO C. B. S.

(USE NEGATIVE PRESSURE VALUES AS PER ASCE 7-98)

MAXIMUM DESIGN LOAD "W" (p.s.f.)	SIDE RAIL (J)			SIDE RAIL (K)			SIDE RAIL (L)			SIDE RAIL (M)		
	WALL MOUNT	INSIDE MOUNT	BUILD-OUT MOUNT	WALL MOUNT	INSIDE MOUNT	BUILD-OUT MOUNT	WALL MOUNT	INSIDE MOUNT	BUILD-OUT MOUNT	WALL MOUNT	INSIDE MOUNT	BUILD-OUT MOUNT
80 OR LESS	6"	4"	6"	6"	4 1/2"	6"	6"	4"	6"	6"	4 1/2"	6"
	6"	6"	6"	6"	6"	6"	6"	6"	6"	6"	6"	6"
>80 TO 150	3 1/2"	2 1/2"	5"	3 1/2"	3"	6"	3 1/2"	2 1/2"	4"	4"	3"	6"
	6"	6"	6"	6"	6"	6"	6"	6"	6"	6"	6"	6"
>150 TO 225	2 1/2"	–	4"	2 1/2"	2 1/2"	5"	2 1/2"	–	4"	3"	2 1/2"	5"
	6"	5 1/2"	6"	6"	6"	6"	6"	6"	6"	6"	6"	6"

MASONRY
POURED CONCRETE

SUBSTRATE LEGEND

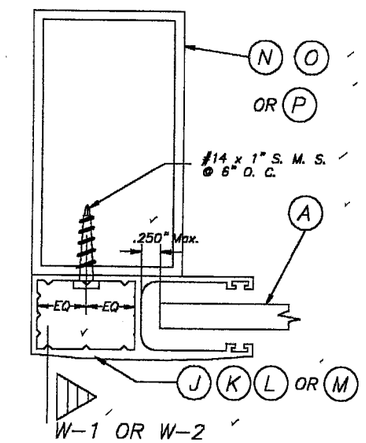

SECTION Q – Q : MULLION MOUNT (FACE MOUNT)

SCALE: 1/2" = 1"

* MAXIMUM ANCHOR SPACING (in.) AT SIDE RAILS VERSUS EDGE DISTANCE = E. D.

+ MAXIMUM ANCHOR SPACING ARE VALID FOR 3 1/2" EDGE DISTANCE. FOR E. D. LESS THAN 3 1/2", REDUCE ANCHOR SPACING BY MULTIPLYING SPACING SHOWN ON SCHEDULE BY THE FOLLOWING FACTORS (REDUCED SPACING OBTAINED USING FACTORS SHALL NOT BE LESS THAN 3"):

ACTUAL E. D.	FACTOR
3"	.86
2 1/2"	.75
2"	.50

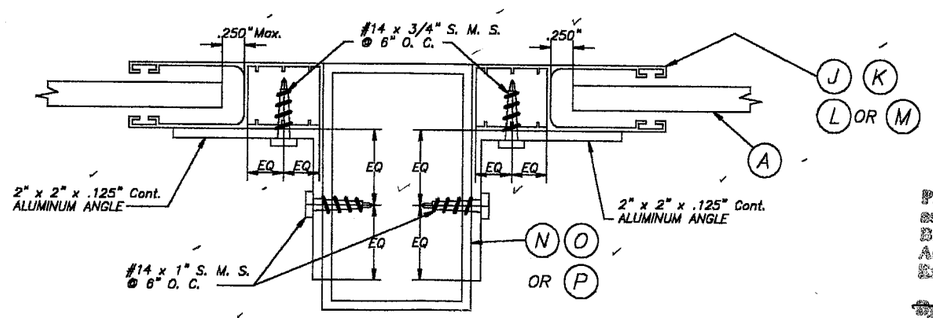

SECTION R – R : MULLION MOUNT (INSIDE MOUNT)

SCALE: 1/2" = 1"

PRODUCT REVISED
as complying with the Florida Building Code
Acceptance No. 03-0123.11
Expiration Date 06/07/04
By
Miami Dade Product Control Division

F.B.C. (H.V.H.Z.) / MIAMI-DADE COUNTY

JUN 03 2003

TILTECO INC.
TILLIT TESTING & ENGINEERING COMPANY
6595 N.W. 36th. St., Ste. 217 – VIRGINIA GARDENS, Fl. 33166
Phone : (305)871-1530 . Fax : (305)871-1531
EB-0006719
WALTER A. TILLIT Jr., P. E.
FLORIDA Lic. # 44167

60mm SLAT ROLL-UP SHUTTER

ROLLINGSHIELD, INC.
2500 N.W. 74th AVENUE
MIAMI, FLORIDA 33122

REV. No	DESCRIPTION	DATE	REV. No	DESCRIPTION	DATE
1	OLD 00-176	11/6/02	3	–	–
2	–	–	4	–	–

AS SHOWN SCALE
11/5/02 DATE
02-534 DRAWING No
SHEET 4 OF 16

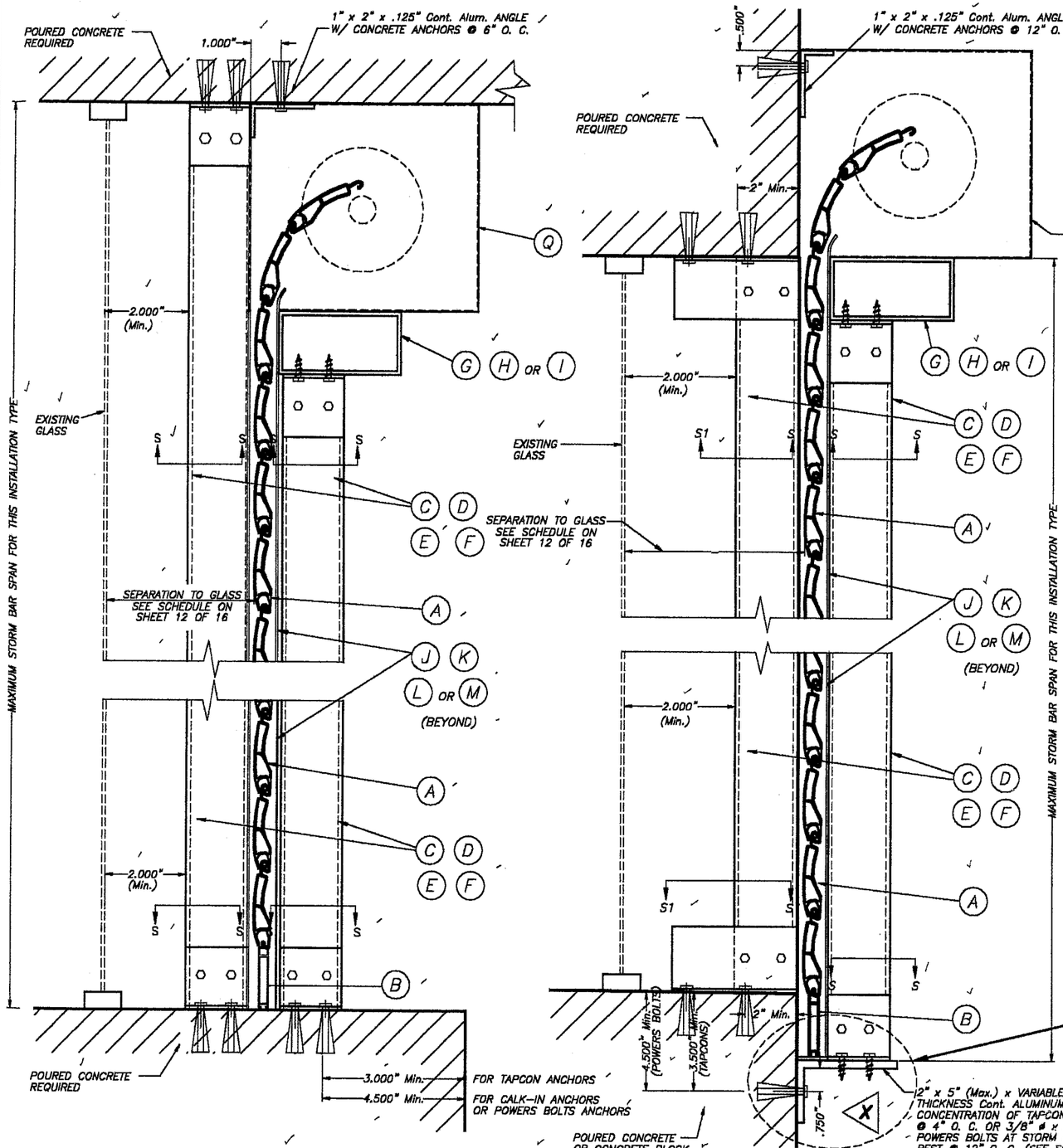

CEILING & FLOOR MOUNTING INSTALLATION W/ FIXED OR REMOVABLE STORM BARS W/CONCRETE ANCHORS

(SEE SECTION "S" FOR ANCHOR TYPE REQUIREMENT)

SCALE : 1/4" = 1"

WALL MOUNTING INSTALLATION W/FIXED STORM BARS W/CONCRETE ANCHORS

SCALE : 1/4" = 1"

SINGLE SPAN SECTIONS AND DETAILS ARE SIMILAR TO ABOVE SHOWN WITHOUT STORM BAR & HEADERS.

SECTIONS V – V

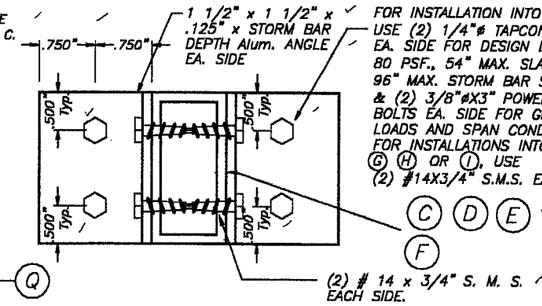

FOR INSTALLATION INTO CONCRETE, USE (2) 1/4"ø TAPCON ANCHORS EA. SIDE FOR DESIGN LOADS UP TO 80 PSF., 54" MAX. SLAT SPAN & 96" MAX. STORM BAR SPAN & (2) 3/8"øX3" POWERS BOLTS EA. SIDE FOR GREATER LOADS AND SPAN CONDITIONS. FOR INSTALLATIONS INTO HEADERS (G) (H) OR (I), USE (2) #14X3/4" S.M.S. EA. SIDE.

SECTION S – S (FOR FIXED STORM BAR)

SCALE : 1/2" = 1"

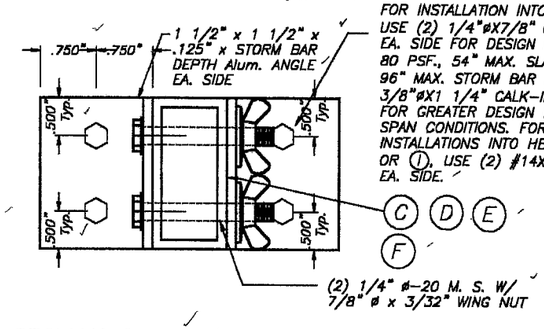

FOR INSTALLATION INTO CONCRETE, USE (2) 1/4"øX7/8" CALK-IN * EA. SIDE FOR DESIGN LOADS UP TO 80 PSF., 54" MAX. SLAT SPAN & 96" MAX. STORM BAR SPAN, & (2) 3/8"øX1 1/4" CALK-INS * EA. SIDE FOR GREATER DESIGN LOADS AND SPAN CONDITIONS. FOR INSTALLATIONS INTO HEADERS (G), (H) OR (I), USE (2) #14X3/4" S.M.S. EA. SIDE.

SECTION S – S (FOR REMOVABLE STORM BAR)

SCALE : 1/2" = 1"

ANCHOR & ANGLE SCHEDULE FOR ELEVATION (X)		
DESIGN LOAD (psf)	ANCHOR TYPE & QUANTITY	ANGLE THICKNESS
72.0 OR LESS **	(6) 1/4" ø TAPCONS	1/8"
160 OR LESS	(4) 3/8" ø x 2 1/4" POWERS BOLTS	1/4"

** W/ 4'-0" Max. SLAT SPAN & 8'-0" MAX. STORM BAR SPAN

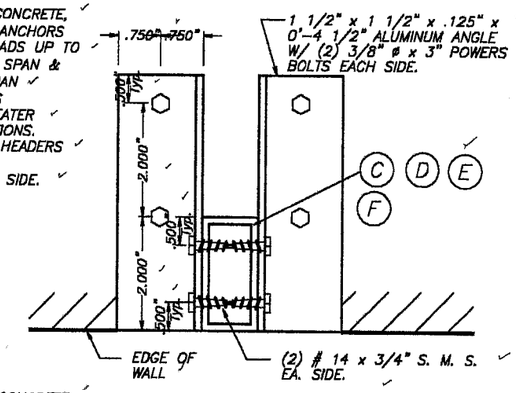

SECTION S1 – S1

SCALE : 1/4" = 1"

* 1/4" ø-20 OR 3/8" ø-16 MACHINE SCREWS USED JOINTLY W/ 1/4" ø x 7/8" OR 3/8" ø x 1 1/4" CALK-IN ANCHORS RESPECTIVELY SHALL BE LEFT TOGETHER W/ ANCHORS AT THE TIME STORM BARS ARE REMOVED. (SEE DET. A).

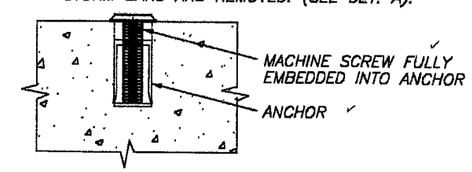

DETAIL A

SCALE : 1/2" = 1"

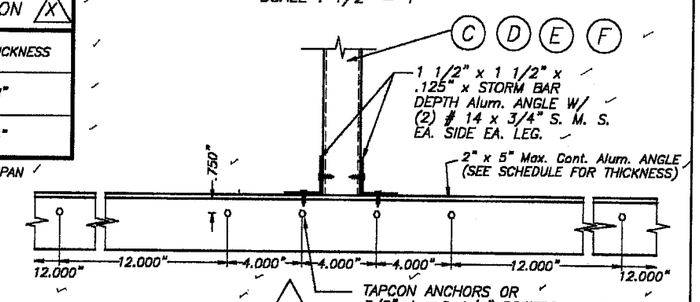

ELEVATION (X)

SCALE : 1/8" = 1"

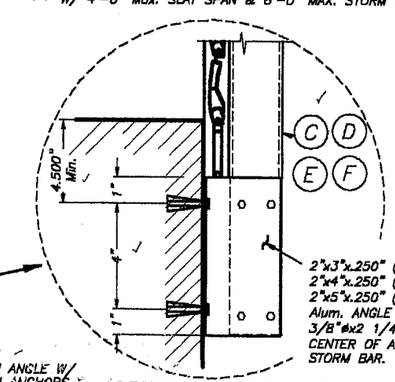

OPTIONAL STORM BAR CONNECTION

PRODUCT REVISED as complying with the Florida Building Code
Acceptance No 03-0123.11
Expiration 06/07/04
Miami-Dade Product Control Division

F.B.C. (H.V.H.Z.) / MIAMI-DADE COUNTY

JUN 03 2003

TILTECO INC.
TILLIT TESTING & ENGINEERING COMPANY
6595 N.W. 36th. St., Ste. 217 – VIRGINIA GARDENS, Fl. 33166
Phone : (305)871-1530 . Fax : (305)871-1531
EB-0006719
WALTER A. TILLIT Jr., P. E.
FLORIDA Lic. # 44167

60mm SLAT ROLL-UP SHUTTER

ROLLINGSHIELD, INC.
2500 N.W. 74th AVENUE
MIAMI, FLORIDA 33122

REV. No	DESCRIPTION	DATE	REV. No	DESCRIPTION	DATE
1	OLD 00-176	11/6/02	3	–	–
2	–	–	4	–	–

AS SHOWN SCALE
11/5/02 DATE
02-534 DRAWING No
SHEET 5 OF 16

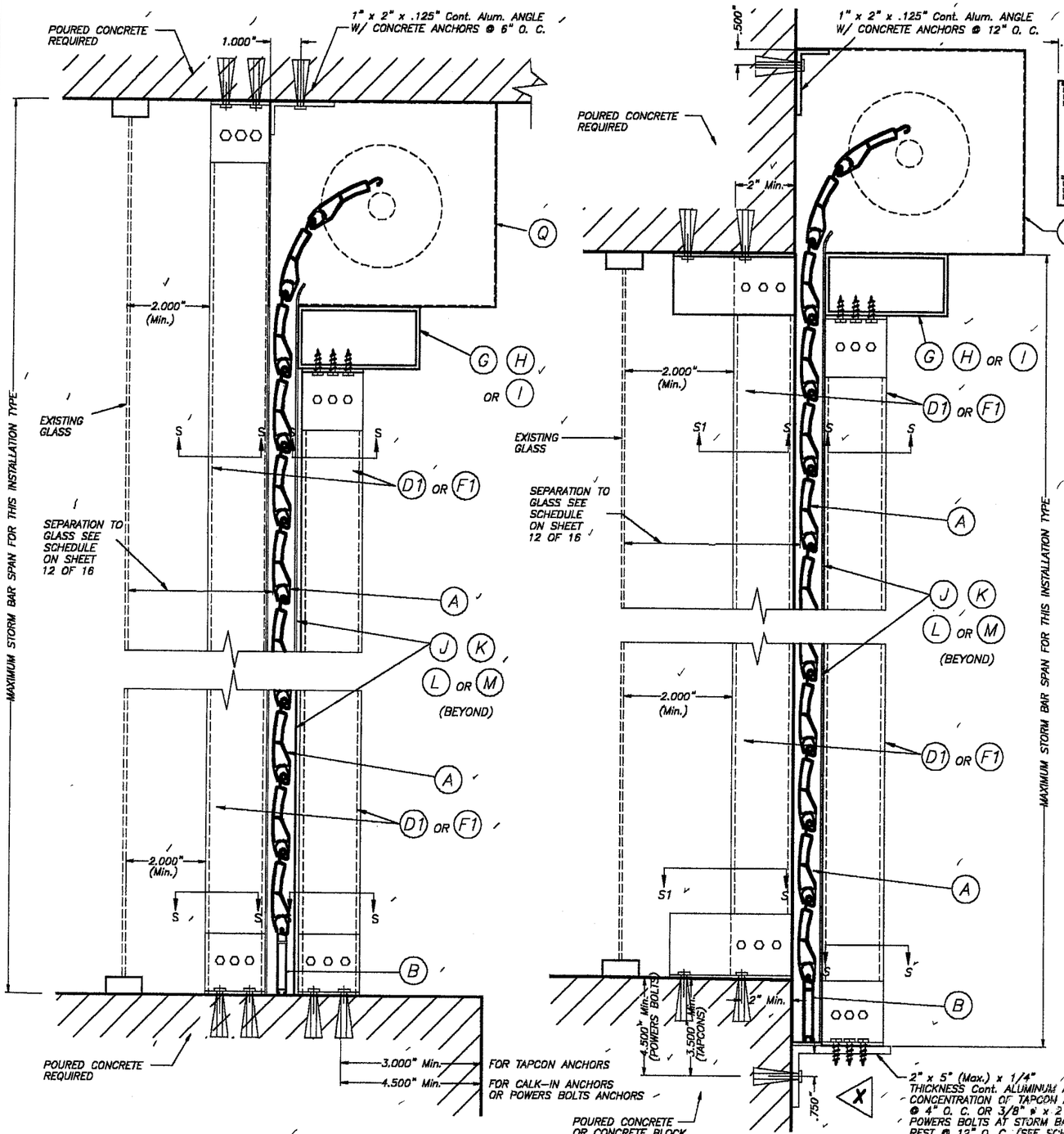

CEILING & FLOOR MOUNTING INSTALLATION W/ FIXED OR REMOVABLE STORM BARS W/CONCRETE ANCHORS

(SEE SECTION "S" FOR ANCHOR TYPE REQUIREMENT)

SCALE : 1/4" = 1"

SINGLE SPAN SECTIONS AND DETAILS ARE SIMILAR TO ABOVE SHOWN WITHOUT STORM BAR & HEADERS.

WALL MOUNTING INSTALLATION W/FIXED STORM BARS W/CONCRETE ANCHORS

SCALE : 1/4" = 1"

SECTIONS V – V

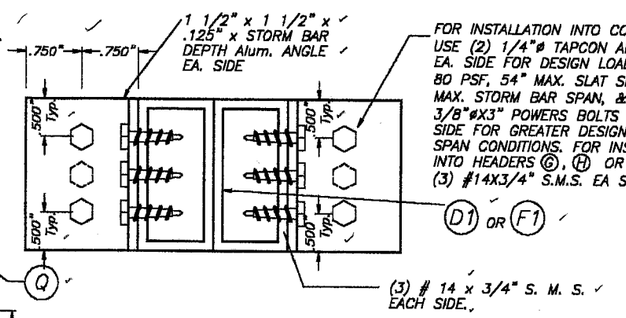

SECTION S – S (FOR FIXED STORM BAR)

SCALE : 1/2" = 1"

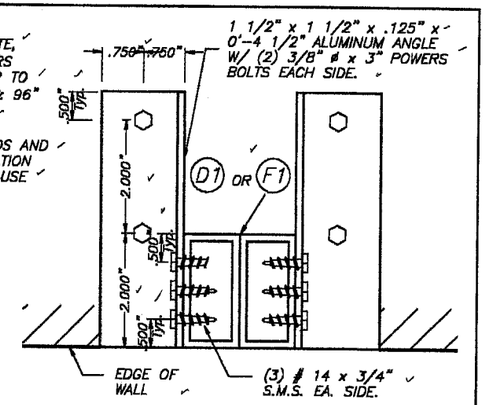

SECTION S1 – S1

SCALE : 1/4" = 1"

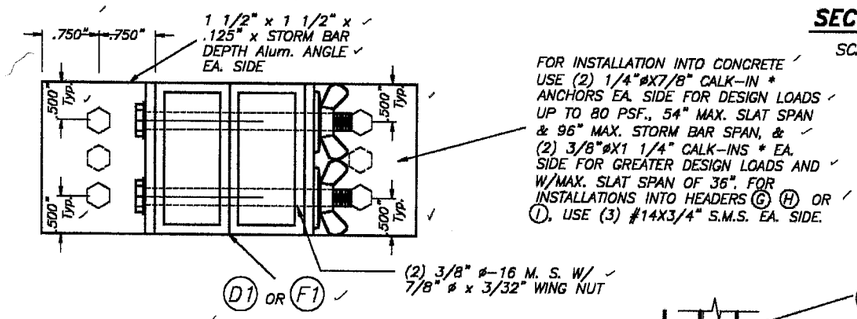

SECTION S – S (FOR REMOVABLE STORM BAR)

SCALE : 1/2" = 1"

* 1/4" ø-20 OR 3/8" ø-16 MACHINE SCREWS USED JOINTLY W/ 1/4" ø x 7/8" OR 3/8" ø x 1 1/4" CALK-IN ANCHORS RESPECTIVELY SHALL BE LEFT TOGETHER W/ ANCHORS AT THE TIME STORM BARS ARE REMOVED. (SEE DET. A).

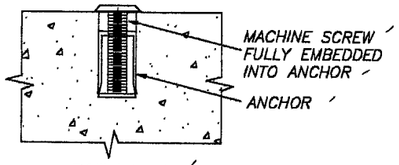

DETAIL A

SCALE : 1/2" = 1"

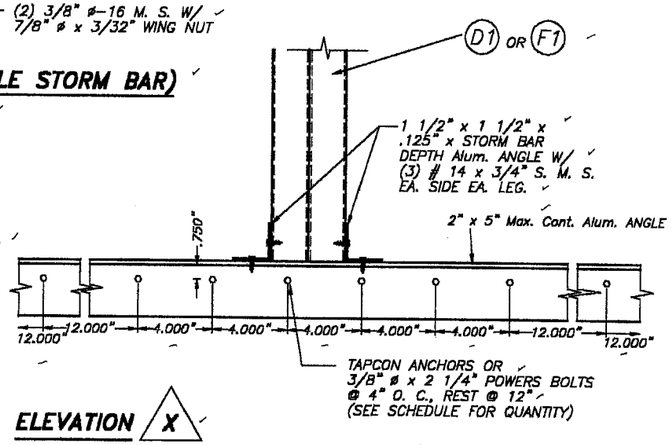

ELEVATION X

SCALE : 1/8" = 1"

ANCHOR & ANGLE SCHEDULE FOR ELEVATION X	
DESIGN LOAD (psf)	ANCHOR TYPE & QUANTITY
72.0 OR LESS **	(6) 1/4" ø TAPCONS
225 OR LESS	(6) 3/8" ø x 2 1/4" POWERS BOLTS

** W/ 4'-0" Max. SLAT SPAN & 8'-0" MAX. STORM BAR SPAN

PRODUCT REVISED
as complying with the Florida Building Code
Acceptance No. 03-0123.11
Expiration Date 06/07/04
By
Miami Dade Product Control Division

F.B.C. (H.V.H.Z.) / MIAMI-DADE COUNTY

JUN 03 2003

TILTECO INC.
TILLIT TESTING & ENGINEERING COMPANY
6595 N.W. 36th. St., Sts. 217 – VIRGINIA GARDENS, Fl. 33166
Phone : (305)871-1530 . Fax : (305)871-1531
EB-0006719
WALTER A. TILLIT Jr., P. E.
FLORIDA Lic. # 44167

60mm SLAT ROLL-UP SHUTTER

ROLLINGSHIELD, INC.
2500 N.W. 74th AVENUE
MIAMI, FLORIDA 33122

REV. No	DESCRIPTION	DATE	REV. No	DESCRIPTION	DATE
1	OLD 00-176	11/5/02	3	–	–
2	–	–	4	–	–

AS SHOWN SCALE
11/5/02 DATE
02-534 DRAWING No
SHEET 5A OF 16

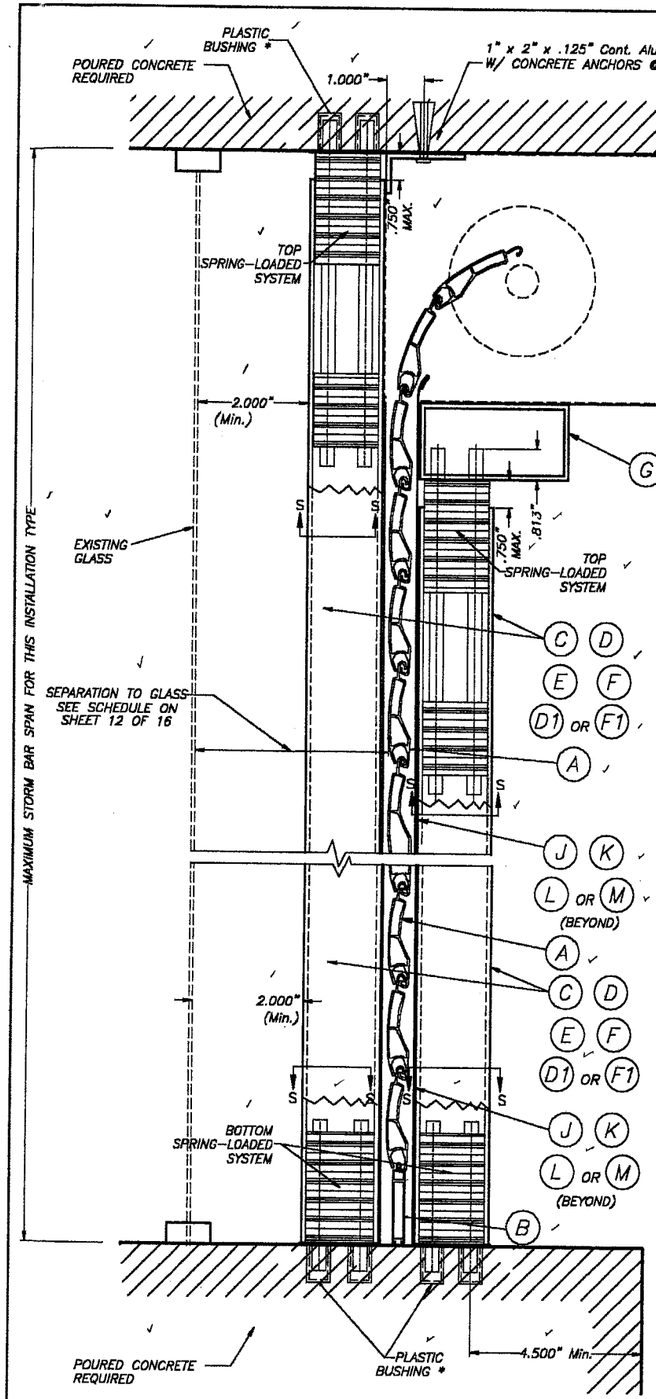

CEILING & FLOOR MOUNTING INSTALLATION W/ REMOVABLE STORM BARS W/SPRING-LOADED SYSTEM *

SCALE : 1/4" = 1"

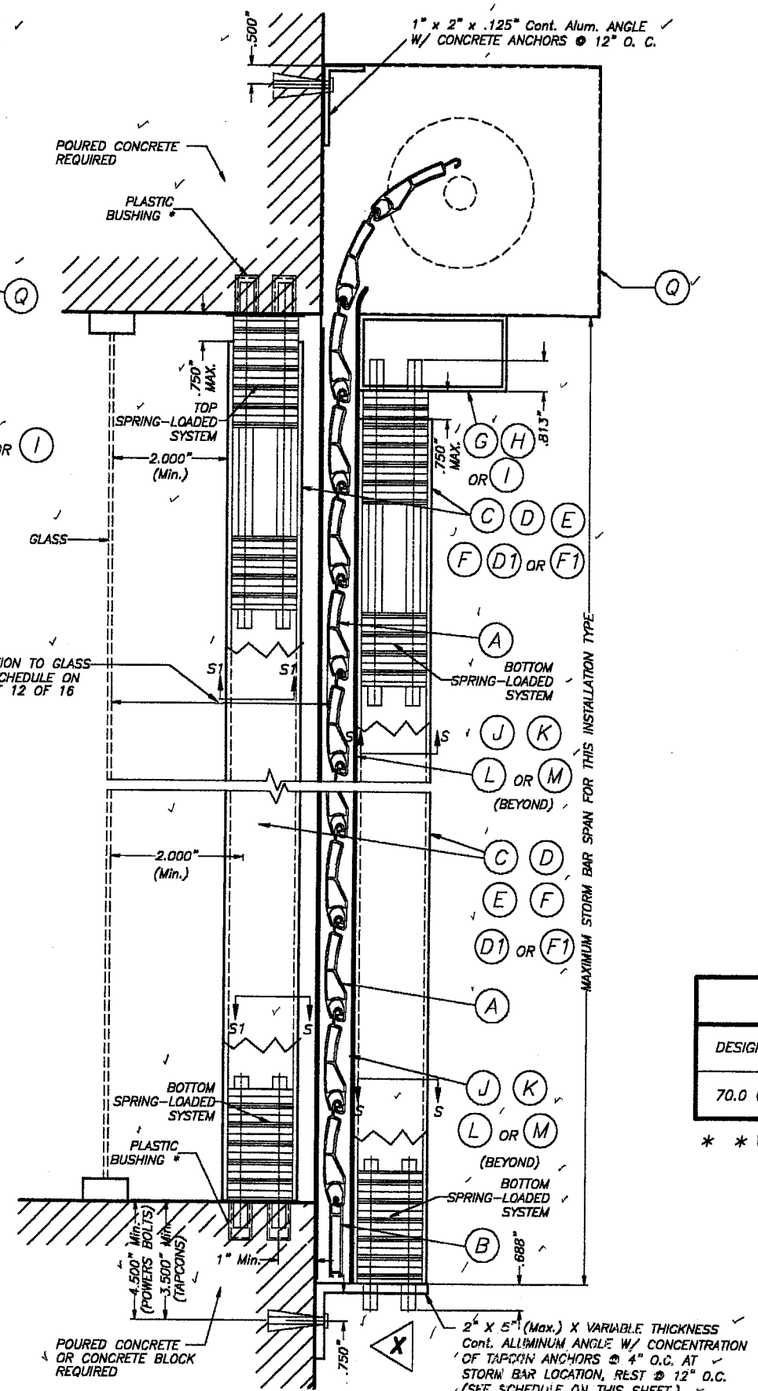

WALL MOUNTING INSTALLATION W/ REMOVABLE STORM BARS W/SPRING-LOADED SYSTEM *

SCALE : 1/4" = 1"

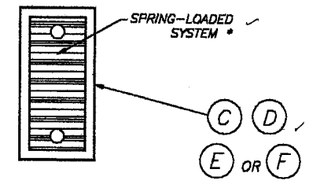

SECTION S – S : SINGLE STORM BAR

SCALE : 1/2" = 1"

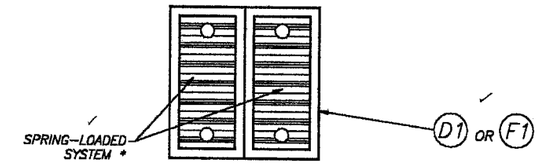

SECTION S – S : DOUBLE STORM BAR

SCALE : 1/2" = 1"

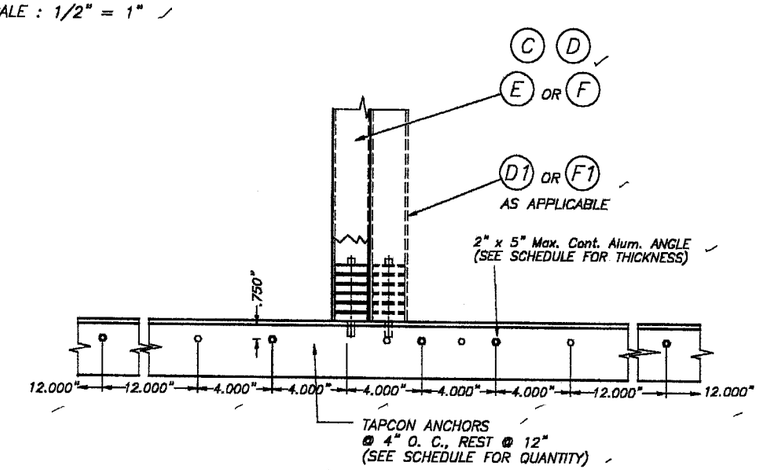

ELEVATION X

SCALE : 1/8" = 1"

ANCHOR & ANGLE SCHEDULE FOR ELEVATION X

DESIGN LOAD (psf)	ANCHOR TYPE & QUANTITY	ANGLE THICKNESS	STORM BAR TYPE
70.0 OR LESS * *	(6) 1/4" ø TAPCONS	1/8"	C D E F D1 F1

* * W/ 4'-0" Max. SLAT SPAN & 8'-0" MAX. STORM BAR SPAN

SECTIONS V – V

* SEE SHEET 9 OF 16 FOR SPECS. & DETAILS.

JUN 03 2003

PRODUCT REVISED
as complying with the Florida Building Code
Acceptance No. 03-0123.11
Expiration Date 06/07/04
By
Miami Dade Product Control Division

F.B.C. (H.V.H.Z.) / MIAMI-DADE COUNTY

TILTECO INC.
TILLIT TESTING & ENGINEERING COMPANY
6595 N.W. 36th. St., Ste. 217 – VIRGINIA GARDENS, FL. 33166
Phone : (305)871-1530 . Fax : (305)871-1531
EB-0006719
WALTER A. TILLIT Jr., P. E.
FLORIDA Lic. # 44167

60mm SLAT ROLL-UP SHUTTER

ROLLINGSHIELD, INC.
2500 N.W. 74th AVENUE
MIAMI, FLORIDA 33122

REV. No	DESCRIPTION	DATE	REV. No	DESCRIPTION	DATE
1	OLD 00-176	11/5/02	3	–	–
2	–	–	4	–	–

AS SHOWN SCALE
11/5/02 DATE
02-534 DRAWING No
SHEET 6 OF 16

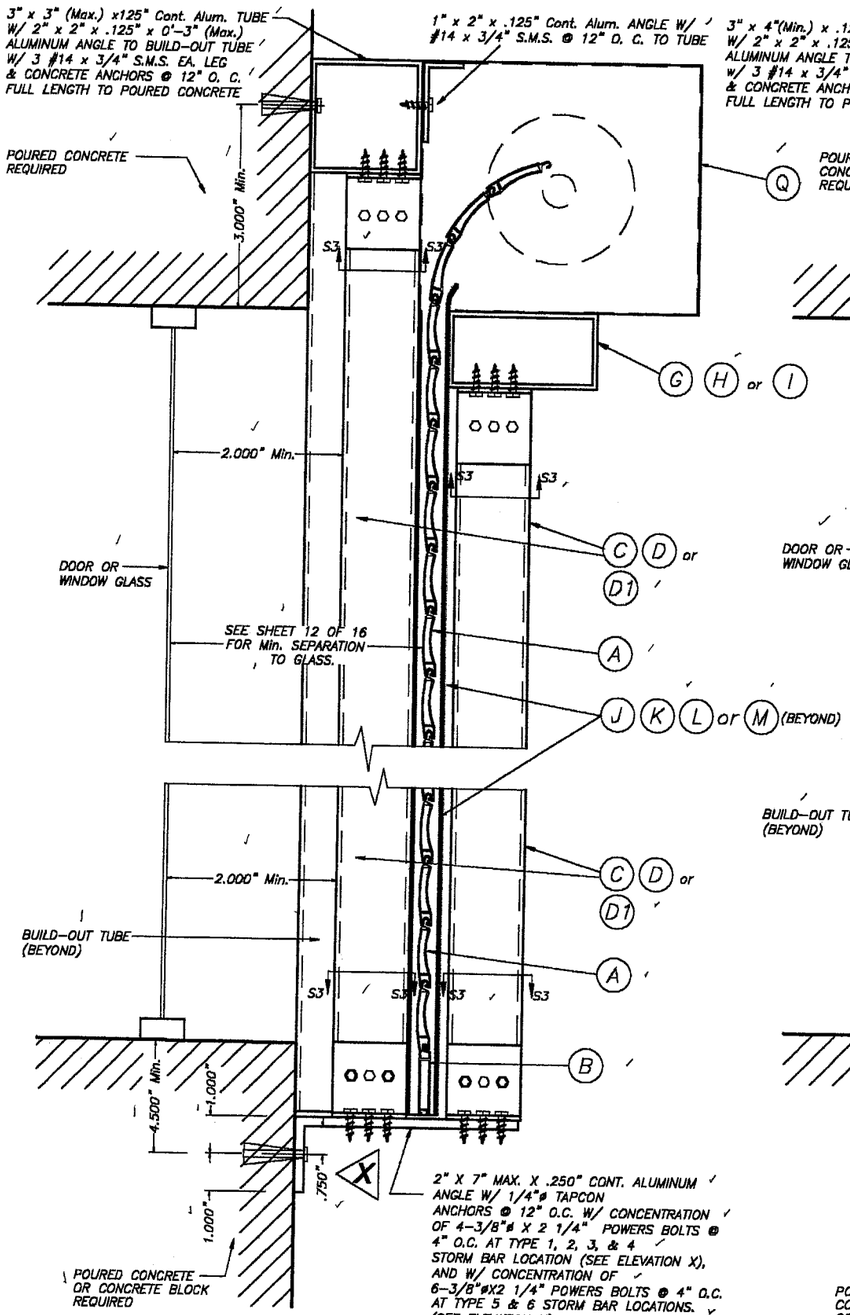

CASE I

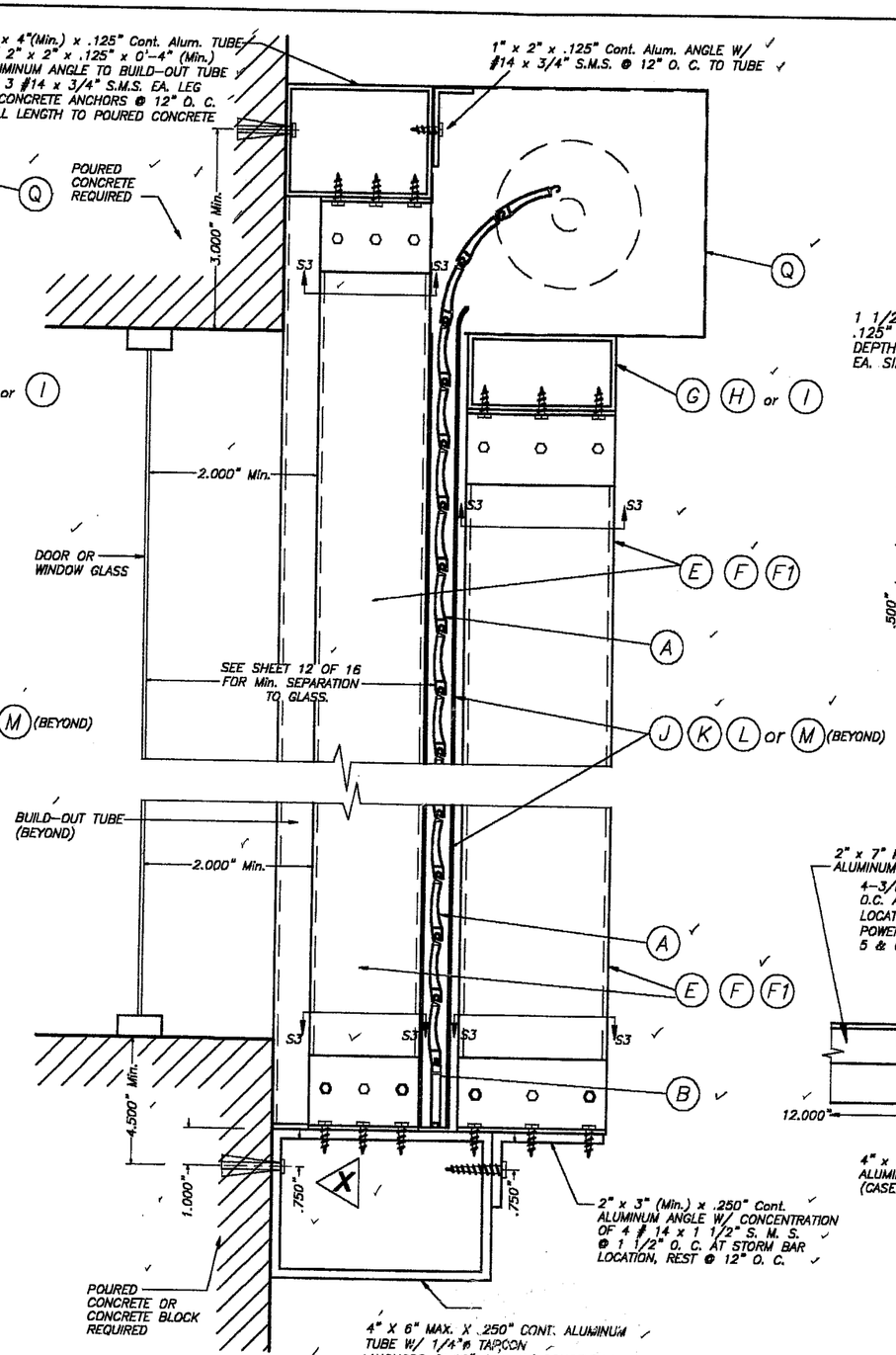

CASE II

FIXED STORM BAR CONNECTION AT BUILD-OUT INSTALLATIONS W/SHEET METAL SCREWS

SCALE : 1/4" = 1"

NOTE:
SINGLE SPAN SECTIONS AND DETAILS ARE SIMILAR TO ABOVE SHOWN WITHOUT STORM BAR & HEADERS.

SECTIONS V – V

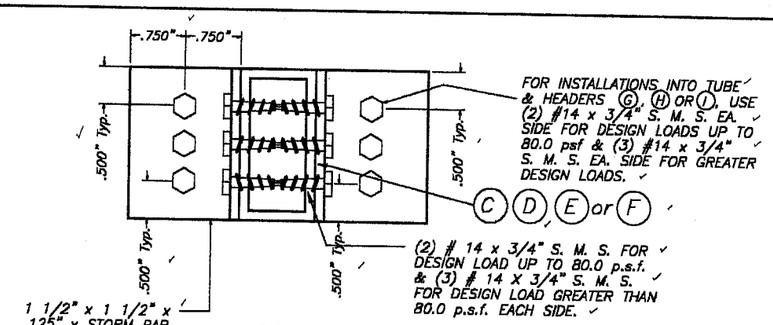

SECTION S3 – S3

SCALE : 1/2" = 1"

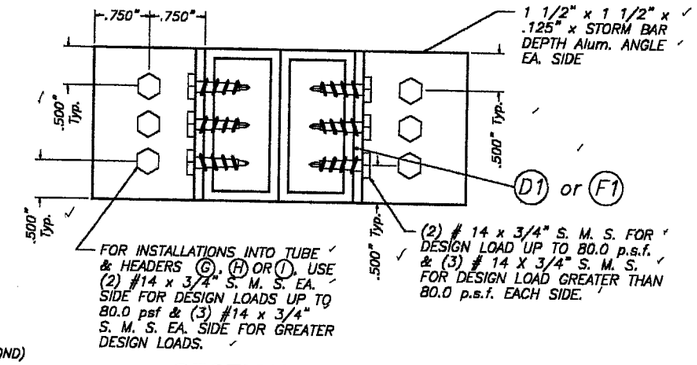

SECTION S3 – S3

SCALE : 1/2" = 1"

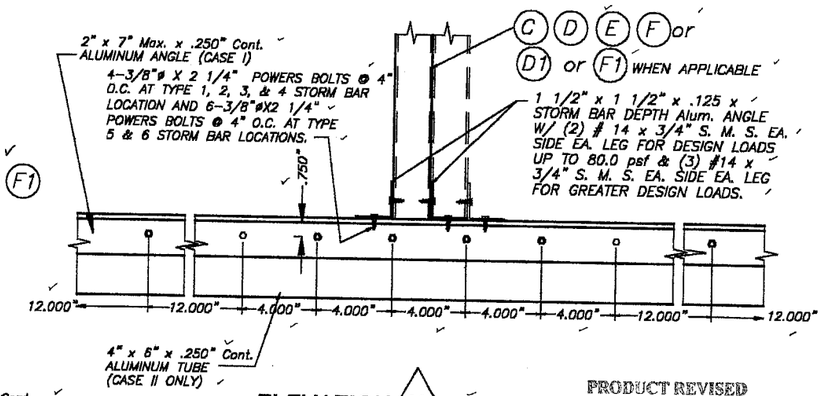

ELEVATION X

SCALE : 1/8" = 1"

PRODUCT REVISED
as complying with the Florida Building Code
Acceptance No. 03-0123.11
Expiration Date 06/07/04
By
Miami Dade Product Control Division

F.B.C. (H.V.H.Z.) / MIAMI-DADE COUNTY

JUN 03 2003

TILTECO INC.
TILLIT TESTING & ENGINEERING COMPANY
6595 N.W. 36th. St., Ste. 217 – VIRGINIA GARDENS, Fl. 33166
Phone : (305)871-1530 . Fax : (305)871-1531
EB-0006719
WALTER A. TILLIT Jr., P. E.
FLORIDA Lic. # 44167

60mm SLAT ROLL-UP SHUTTER

ROLLINGSHIELD, INC.
2500 N.W. 74th AVENUE
MIAMI, FLORIDA 33122

REV. No	DESCRIPTION	DATE	REV. No	DESCRIPTION	DATE
1	OLD 00-176	11/5/02	3	–	–
2	–	–	4	–	–

AS SHOWN SCALE
11/5/02 DATE
02-534 DRAWING No
SHEET 7 OF 16

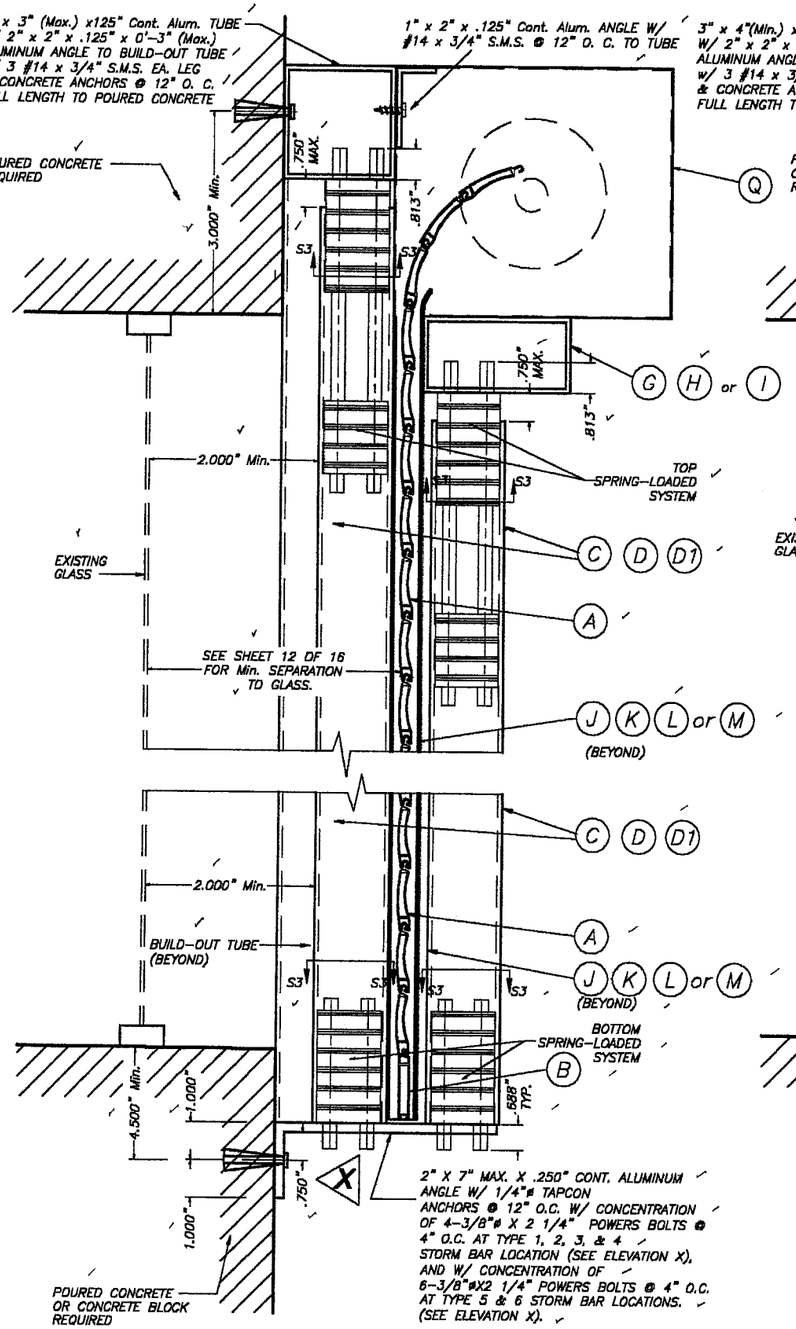

CASE I

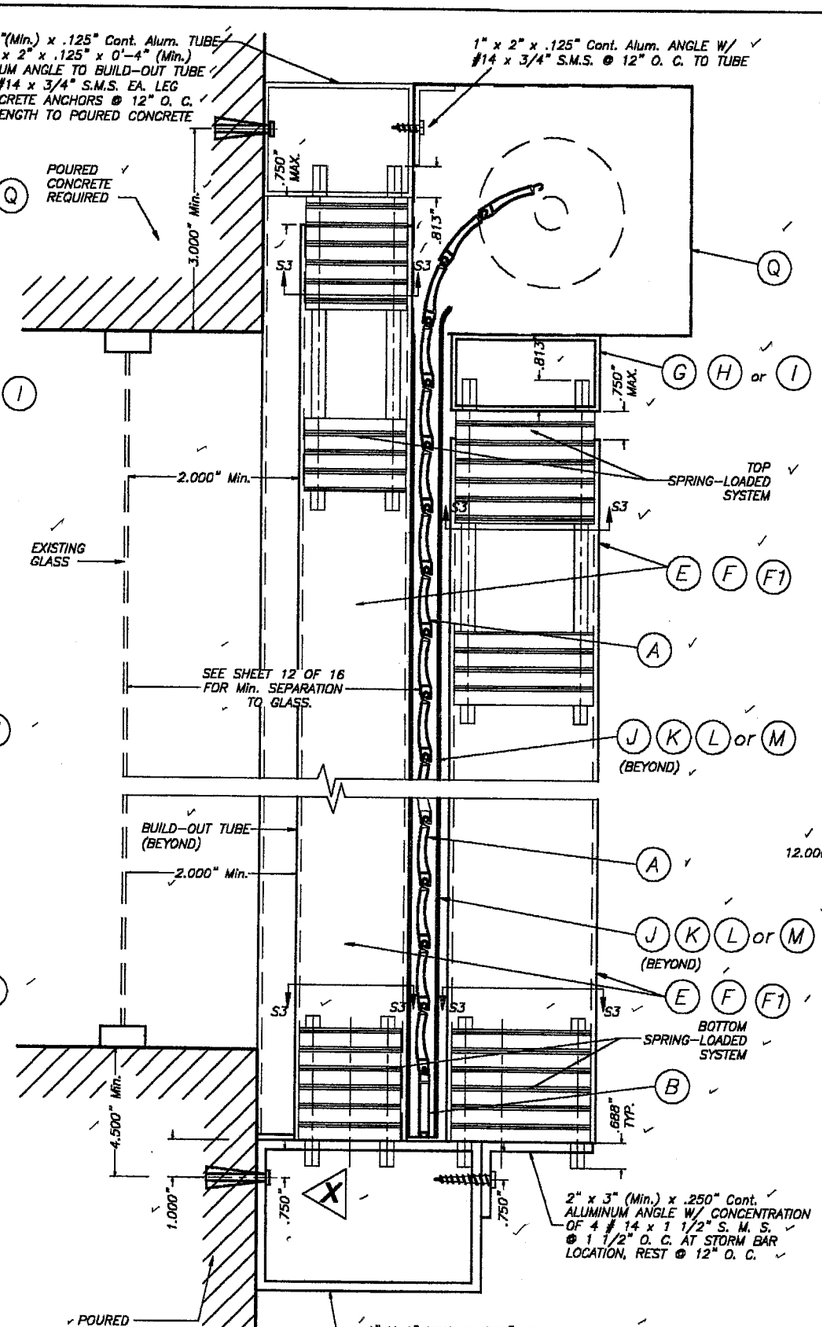

CASE II

REMOVABLE STORM BAR CONNECTION AT BUILD-OUT INSTALLATIONS W/SPRING-LOADED SYSTEM *

SCALE : 1/4" = 1"

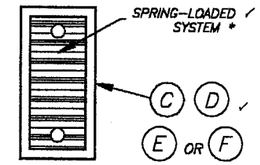

SECTION S - S : SINGLE STORM BAR

SCALE : 1/2" = 1"

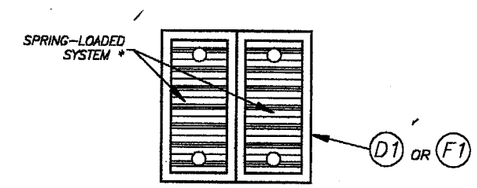

SECTION S - S : DOUBLE STORM BAR

SCALE : 1/2" = 1"

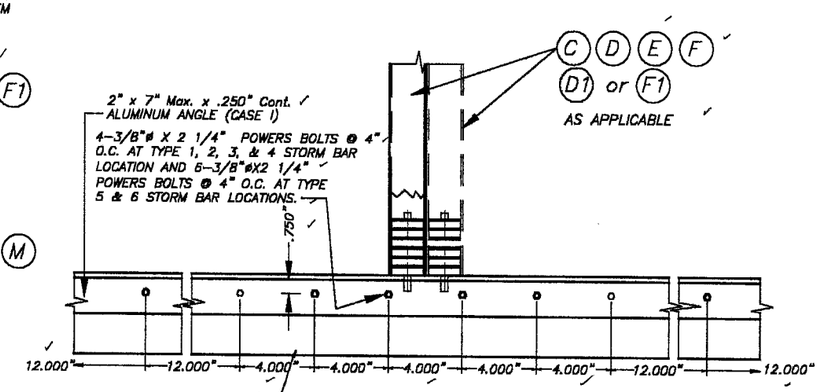

ELEVATION X

SCALE : 1/8" = 1"

PRODUCT REVIEWED as complying with the Florida Building Code. Acceptance No. 03-0123.11 Expiration Date 09/07/04 By Miami Dade Product Control Division

F.B.C. (H.V.H.Z.) / MIAMI-DADE COUNTY

SECTIONS V - V

* SEE SHEET 9 OF 16 FOR SPECS. & DETAILS.

JUN 03 2003

TILTECO INC.
TILLIT TESTING & ENGINEERING COMPANY
6595 N.W. 36th. St., Ste. 217 - VIRGINIA GARDENS, Fl. 33166
Phone : (305)871-1530 . Fax : (305)871-1531
EB-0006719
WALTER A. TILLIT Jr., P. E.
FLORIDA Lic. # 44167

60mm SLAT ROLL-UP SHUTTER

ROLLINGSHIELD, INC.
2500 N.W. 74th AVENUE
MIAMI, FLORIDA 33122

REV. No	DESCRIPTION	DATE	REV. No	DESCRIPTION	DATE
1	OLD 00-176	11/8/02	3	-	-
2	-	-	4	-	-

AS SHOWN SCALE
11/5/02 DATE
02-534 DRAWING No
SHEET 8 OF 16

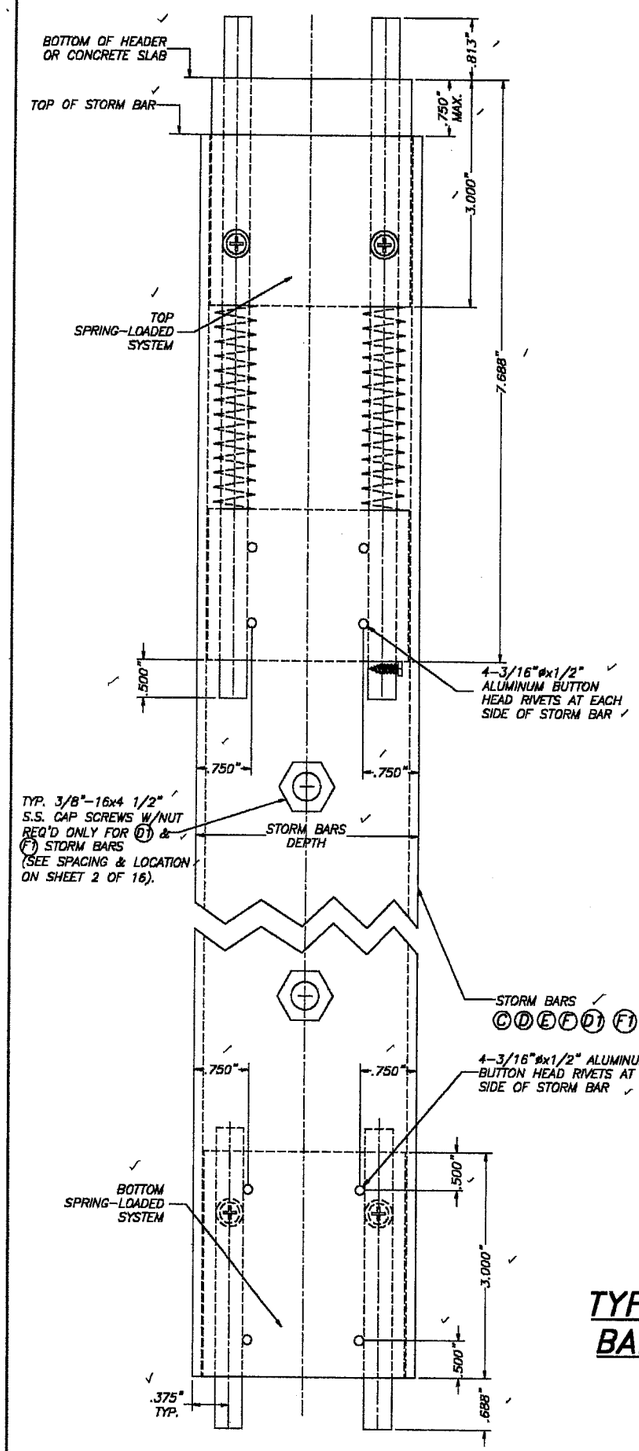

TYPICAL CONNECTION TO STORM BARS (SIDE VIEW)

SCALE: 1/2" = 1"

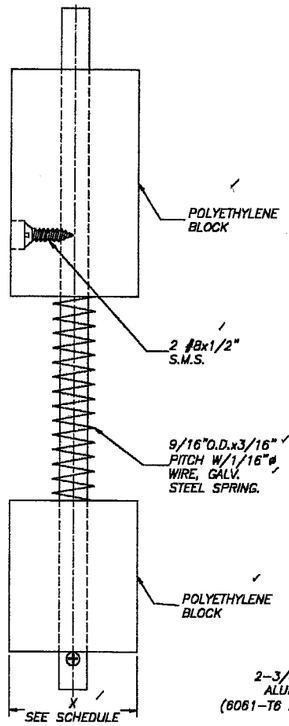

FRONT

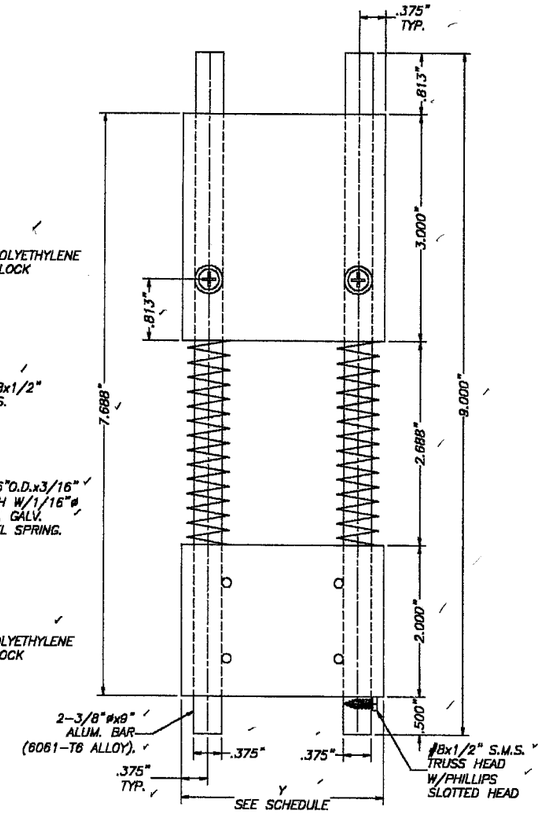

SIDE VIEW

TOP SPRING-LOADED SYSTEM

SCALE: 1/2" = 1"

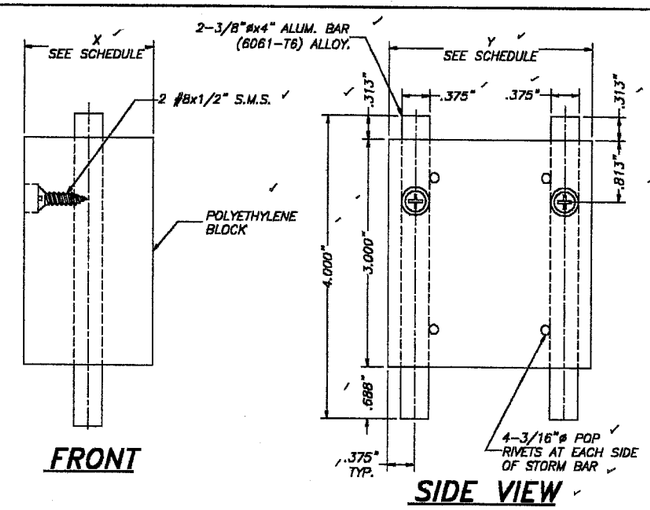

FRONT

SIDE VIEW

BOTTOM SPRING-LOADED SYSTEM

SCALE: 1/2" = 1"

X, Y DIMENSIONS FOR A GIVEN TYPE OF STORM BAR		
STORM BAR TYPE	X(in)	Y(in)
C	1 19/32"	1 19/32"
D	1 23/32"	2 23/32"
E	1 23/32"	3 23/32"
F	1 15/32"	3 15/32"
D1	1 23/32"	2 23/32"
F1	1 15/32"	3 15/32"

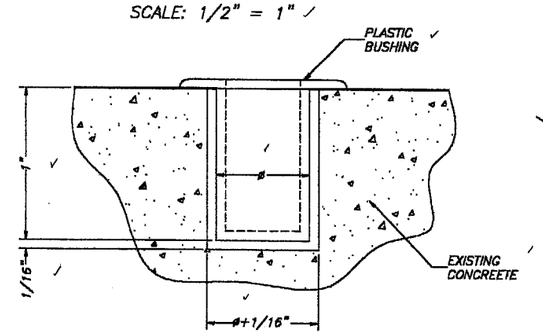

ENGAGEMENT HOLE DETAIL (IN CONCRETE) FOR REMOVABLE SPRING-LOADED STORM BARS

SCALE: 1" = 1"

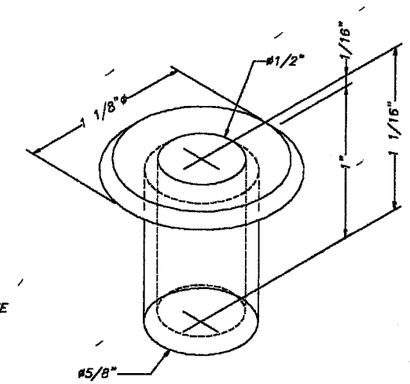

PLASTIC BUSHING: DETAIL 1(ISOMETRIC)

SCALE: 1" = 1"

NOTES:

(1) ENGAGEMENT HOLE DRILLED IN CONCRETE SHALL BE 5/8"øx1" DEEP, W/1/16" MAX. TOLERANCE IN BOTH DIAMETER & DEPTH.

(2) ENGAGEMENT HOLE DRILLED IN CONCRETE SHALL BE PERMANENTLY PROTECTED BY FITTING PLASTIC BUSHING (SEE DETAIL 1) INTO HOLE. IT SHALL BE THE RESPONSIBILITY OF SHUTTERS'S OWNER TO PERMANENTLY KEEP BUSHING FREE OF DUST & MOLD BY REMOVING IT FROM ENGAGEMENT HOLE, CLEANING IT AND REPOSITIONING IT INTO HOLE AS INDICATED ON ABOVE DETAIL.

PRODUCT REVISED as complying with the Florida Building Code
Acceptance No. 03-0123.11
Expiration Date 06/07/04
By Miami Dade Product Control

TYPICAL SPRING-LOADED SYSTEM FOR REMOVABLE STORM BARS AS ALTERNATE TO THE USE OF CALK-IN ANCHORS

F.B.C. (H.V.H.Z.) / MIAMI-DADE, COUNTY

JUN 0 3 2003

TILTECO INC.
TILLIT TESTING & ENGINEERING COMPANY
6595 N.W. 36th. St., Ste. 217 – VIRGINIA GARDENS, FL 33166
Phone : (305)871-1530 , Fax : (305)871-1531
EB-0006719
WALTER A. TILLIT Jr., P. E.
FLORIDA Lic. # 44167

60mm SLAT ROLL-UP SHUTTER

ROLLINGSHIELD, INC.
2500 N.W. 74th AVENUE
MIAMI, FLORIDA 33122

REV. No	DESCRIPTION	DATE	REV. No	DESCRIPTION	DATE
1	OLD 00-176	11/5/02	3	–	–
2	–	–	4	–	–

AS SHOWN SCALE

11/5/02 DATE

02-534 DRAWING No

SHEET 9 OF 16

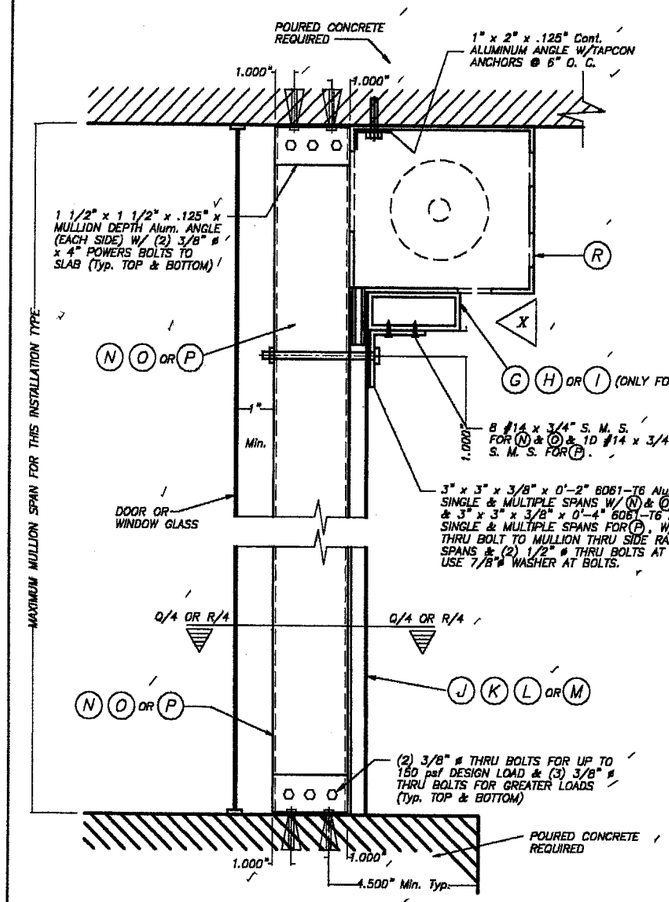

FLOOR/CEILING MOUNTING : SECTION W-W (1), W/O HEADER SECTION W-W (2), W/HEADER

SCALE : 1/8" = 1"

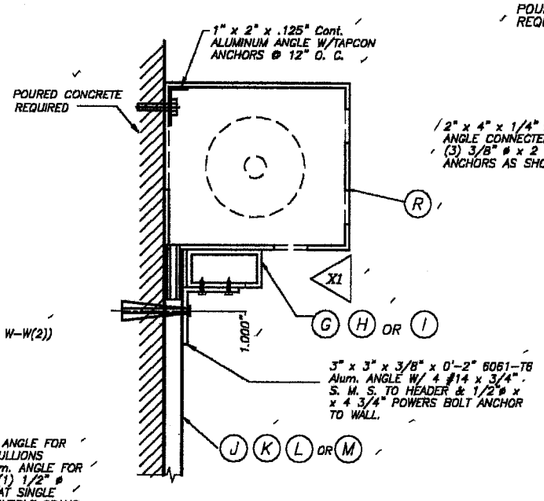

WALL MOUNTING : SECTION W-W (3)

SCALE : 1/8" = 1"

NOTE :
THIS INSTALLATION IS ONLY VALID FOR STORM BARS WITH Max. SPAN = 8'-0", HEADERS WITH 12'-0" Max. SINGLE SPAN & 80 psf MAXIMUM DESIGN LOAD OR FOR STORM BARS WITH MAX. SPAN=8'-0"; HEADERS WITH 15'-0" MAX. SINGLE SPAN & 80 p.s.f. MAXIMUM DESIGN LOAD.

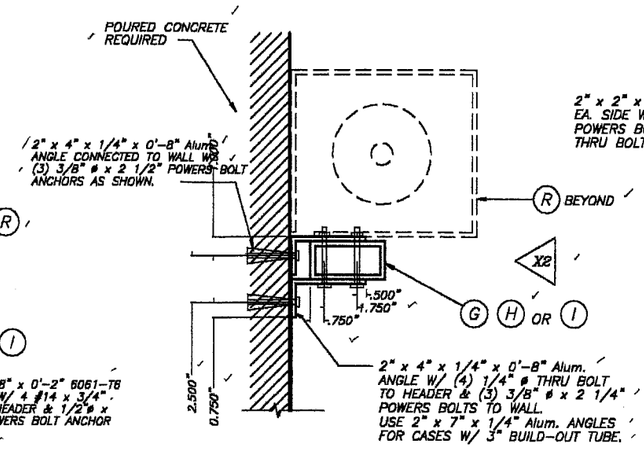

WALL MOUNTING : SECTION W-W(3)

SCALE : 1/8" = 1"

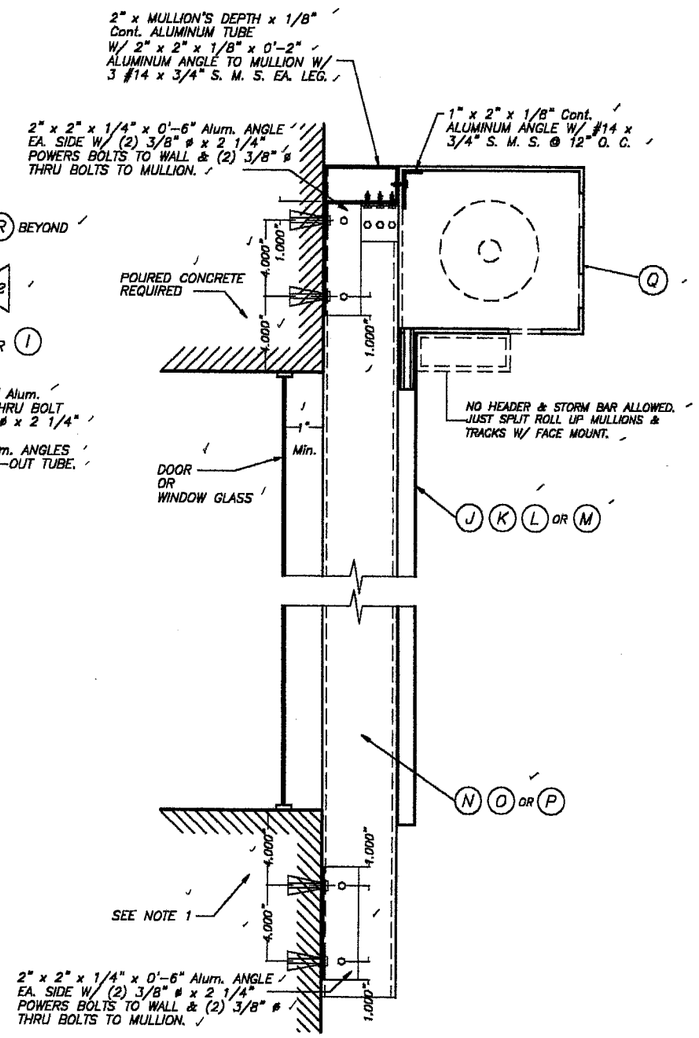

WALL MOUNTING : MULLION CONNECTION AT TOP & BOTTOM : SECTION W-W (1)

SCALE : 1/8" = 1"

NOTE 1 :
EXISTING WALL MAY BE POURED CONCRETE OR CONCRETE BLOCK FOR DESIGN LOADS UP TO 150.0 psf AND SHALL BE POURED CONCRETE OR CONCRETE FILLED BLOCKS FOR GREATER LOADS.

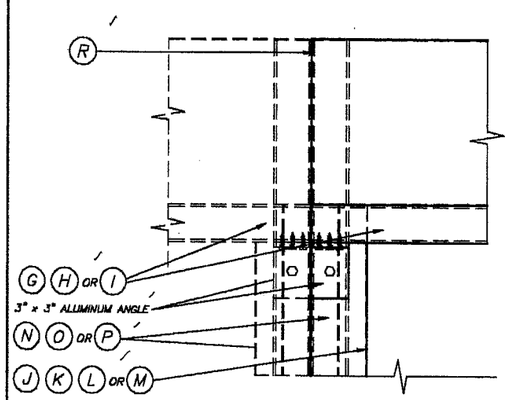

ELEVATION X

SCALE : 1/8" = 1"

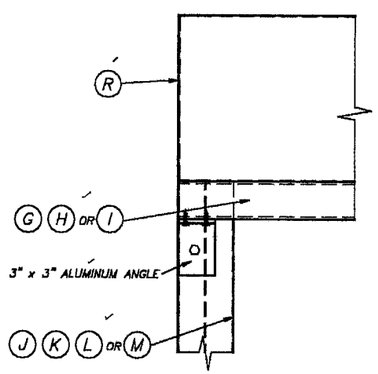

ELEVATION X1

SCALE : 1/8" = 1"

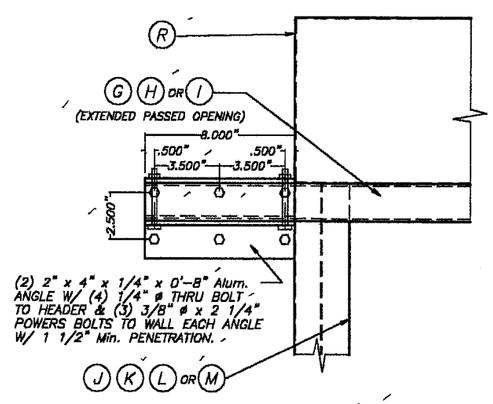

ELEVATION X2

SCALE : 1/8" = 1"

TYPICAL HEADER CONNECTION AT ENDS: SECTIONS W-W

JUN 03 2003

PRODUCT REVISED
as complying with the Florida Building Code
Acceptance No. 03-0123.11
Expiration Date 06/07/04
By
Miami Dade Product Control Division

F.B.C. (H.V.H.Z.) / MIAMI-DADE COUNTY

TILTECO INC.
TILLIT TESTING & ENGINEERING COMPANY
6595 N.W. 36th. St., Ste. 217 – VIRGINIA GARDENS, Fl. 33166
Phone : (305)871-1530 . Fax : (305)871-1531
EB-0006719
WALTER A. TILLIT Jr., P. E.
FLORIDA Lic. # 44167

60mm SLAT ROLL-UP SHUTTER

ROLLINGSHIELD, INC.
2500 N.W. 74th AVENUE
MIAMI, FLORIDA 33122

REV. No	DESCRIPTION	DATE	REV. No	DESCRIPTION	DATE
1	OLD 00-176	11/5/02	3	–	–
2	–	–	4	–	–

AS SHOWN SCALE
11/5/02 DATE
02-534 DRAWING No
SHEET 10 OF 16

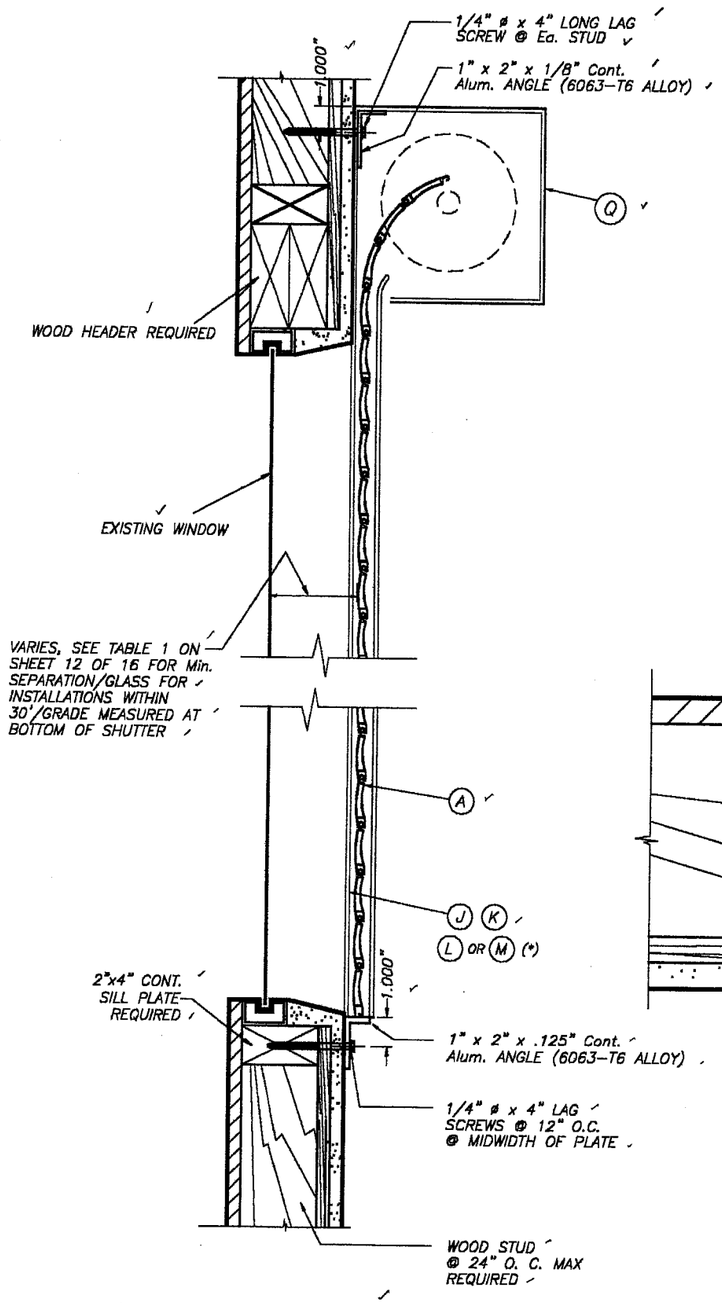

WALL MOUNTING INSTALLATION

SINGLE SPAN CONDITION

N. T. S.

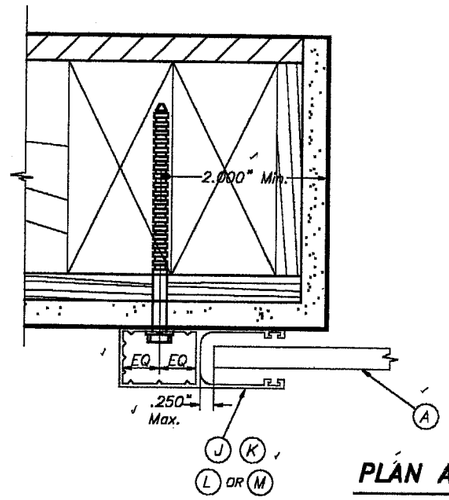

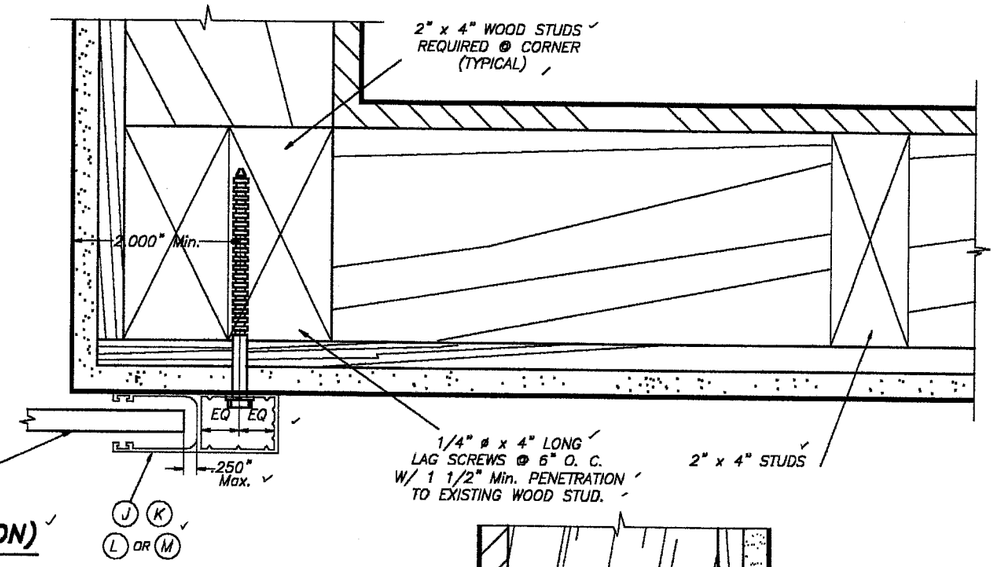

PLAN A (SECTION)

WALL MOUNT

SCALE : 3/8" = 1"

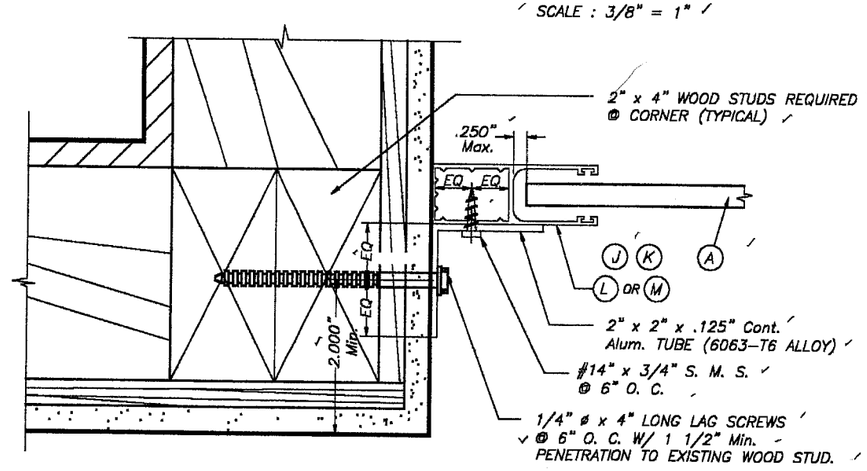

PLAN B (SECTION)

INSIDE MOUNT

SCALE : 3/8" = 1"

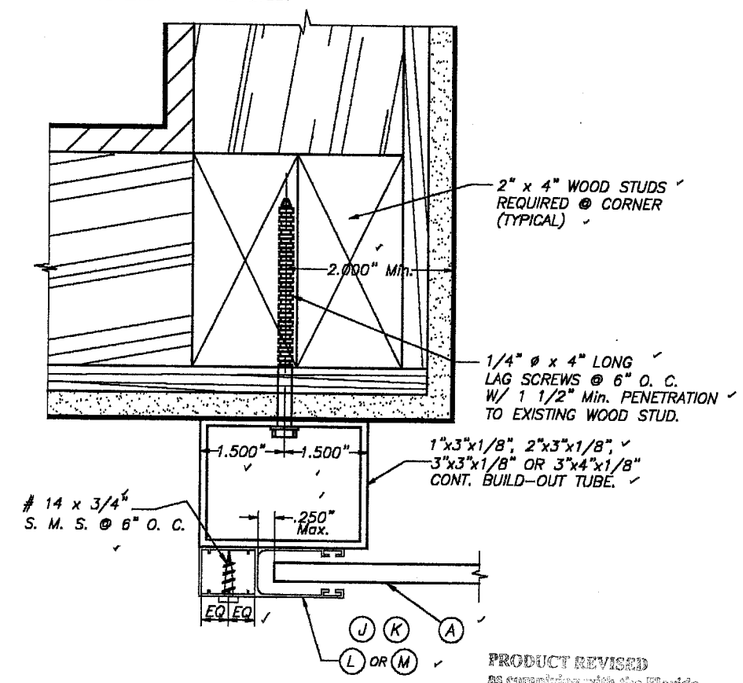

PLAN C (SECTION)

BUILD–OUT

SCALE : 3/8" = 1"

PRODUCT REVISED
as complying with the Florida Building Code
Acceptance No 03-0123.11
Expiration Date 06/07/09
By
Miami Dade Product Control Division

NOTES:

1. INSTALLATIONS ARE ONLY VALID FOR BUILDINGS WITH DESIGN LOADS UP TO 75.0 psf.
2. FOR NEW FRAME CONSTRUCTION: WOOD MEMBER TO BE SOUTHERN PINE No. 2 W/ SPECIFIC DENSITY OF 0.55 OR EQUAL.
3. MINIMUM PENETRATION OF LAG SCREWS INTO WOOD MEMBER TO BE 1 1/2".

JUN 03 2003

F.B.C. (H.V.H.Z.) / MIAMI–DADE COUNTY

TILTECO INC.
TILLIT TESTING & ENGINEERING COMPANY
6595 N.W. 36th. St., Ste. 217 – VIRGINIA GARDENS, Fl. 33166
Phone : (305)871–1530 . Fax : (305)871–1531
EB–0006719
WALTER A. TILLIT Jr., P. E.
FLORIDA Lic. # 44167

60mm SLAT ROLL–UP SHUTTER

ROLLINGSHIELD, INC.
2500 N.W. 74th AVENUE
MIAMI, FLORIDA 33122

REV. No	DESCRIPTION	DATE	REV. No	DESCRIPTION	DATE
1	OLD 00–176	11/8/02	3	–	–
2	–	–	4	–	–

AS SHOWN	SCALE
11/5/02	DATE
02–534	DRAWING No
SHEET 11 OF 16	

SLAT PERFORMANCE CHART
MAXIMUM NEGATIVE DESIGN PRESSURE RATING "W" (p. s. f.) AND CORRESPONDING MAXIMUM SLAT SPAN "L" FOR TYPE 1 SLAT

(USE NEGATIVE PRESSURE VALUES AS PER ASCE 7-98)

SLAT TYPE / Max. DESIGN LOAD "W" (p.s.f.)	MAXIMUM SLAT SPAN	MINIMUM SEPARATION TO GLASS	
	SINGLE & MULTIPLE UNIT *	SINGLE & MULTIPLE UNIT **	SINGLE & MULTIPLE UNIT ***
40.0	6'-8"	3"	3"
45.0	6'-6"	3"	3"
50.0	6'-3"	3"	3"
55.0	6'-1"	3"	3"
60.0	5'-11"	3"	3"
65.0	5'-9"	3"	3"
70.0	5'-7"	3"	3"
75.0	5'-6"	3"	3"
80.0	5'-5"	3"	3"
85.0	5'-3"	3"	3"
90.0	5'-2"	3"	3"
95.0	5'-1"	3"	3"
100.0	5'-0"	3"	3"
105.0	4'-11"	3"	3"
110.0	4'-10"	3"	3"
115.0	4'-9"	3"	3"
120.0	4'-8"	3"	3"
125.0	4'-8"	3"	3"
130.0	4'-7"	3"	3"
135.0	4'-6"	3"	3"
140.0	4'-5"	3"	3"
145.0	4'-5"	3"	3"
150.0	4'-4"	3"	3"
155.0	4'-3"	3"	3"
160.0	4'-2"	3"	3"
165.0	4'-1"	3"	3"
170.0	4'-0"	3"	3"
175.0	4'-0"	3"	3"
180.0	3'-11"	3"	3"
185.0	3'-10"	3"	3"
190.0	3'-10"	3"	3"
195.0	3'-9"	3"	3"
200.0	3'-9"	3"	3"
205.0	3'-8"	3"	3"
210.0	3'-8"	3"	3"
215.0	3'-7"	3"	3"
220.0	3'-7"	3"	3"
225.0	3'-6"	3"	3"

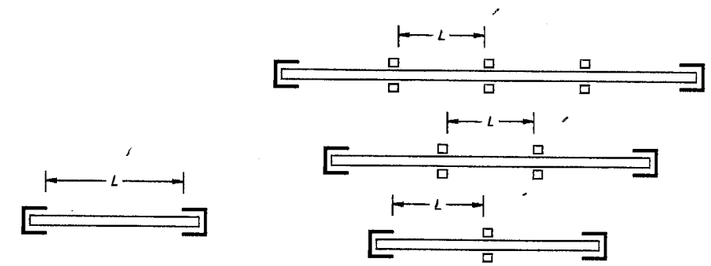

SINGLE SPAN

MULTIPLE SPAN

SPAN LAYOUT

* SPANS VALID FOR EVERY INSTALLATION LOCATED AT ANY ELEVATION OF BUILDING MEASURED AT BOTTOM OF SHUTTER. MINIMUM SEPARATION TO GLASS FOR SINGLE AND MULTIPLE UNITS SHALL BE MEASURED FROM BACK OF SLAT TO GLASS.

** MINIMUM SEPARATION TO GLASS FOR SHUTTERS INSTALLED WITHIN THE FIRST 30'-0" ELEVATION OF BUILDING AND MAXIMUM SPAN. SEE TABLE 1 FOR Min. SEPARATION TO GLASS FOR SPANS LESS THAN THE Max. ALLOWED.

*** MINIMUM SEPARATION TO GLASS FOR SHUTTERS INSTALLED ABOVE 30'-0" ELEVATION OF BUILDING, MEASURED AT BOTTOM OF SHUTTER.

TABLE 1:

SLAT SPAN (ft.)	MINIMUM SEPARATION TO GLASS
80" OR LESS	3"

NOTE : THE TOTAL SLAT DEFLECTION AFTER ADDING THE DEFLECTION OF THE HEADER AND/OR THE STORM BAR SHALL NOT EXCEED A MAXIMUM OF 2" OR L/30 IN THE POSITIVE DIRECTION AND A MAXIMUM OF L/30 IN THE NEGATIVE DIRECTION.

PRODUCT REVISED
as complying with the Florida Building Code
Acceptance No. 03-0123.11
Expiration Date 06/07/04
By
Miami Dade Product Control Division

F.B.C. (H.V.H.Z.) / MIAMI-DADE COUNTY

JUN 03 2003

TILTECO INC.
TILLIT TESTING & ENGINEERING COMPANY
6595 N.W. 36th. St., Ste. 217 – VIRGINA GARDENS, Fl. 33166
Phone : (305)871-1530 , Fax : (305)871-1531
EB-0006719
WALTER A. TILLIT Jr., P. E.
FLORIDA Lic. # 44167

60mm SLAT ROLL-UP SHUTTER

ROLLINGSHIELD, INC.
2500 N.W. 74th AVENUE
MIAMI, FLORIDA 33122

REV. No	DESCRIPTION	DATE	REV. No	DESCRIPTION	DATE
1	OLD 00-176	11/5/02	3	–	–
2	–	–	4	–	–

AS SHOWN
SCALE

11/5/02
DATE

02-534
DRAWING No

SHEET 12 OF 16

STORM BAR LOADING CHART

MAXIMUM DESIGN PRESSURE RATING "W" (p. s. f.) AND CORRESPONDING MAXIMUM SPAN "L" FOR A GIVEN TYPE OF STORM BAR AND STORM BAR SPACING.

(USE NEGATIVE PRESSURE VALUES AS PER ASCE 7-98)

MAX. SPAN FOR STORM BARS W/REGULAR CONCRETE ANCHORS

MAXIMUM DESIGN LOAD "W" (p.s.f.)	TYPE 1 STORM BAR 2" x 2" x .188"					TYPE 2 STORM BAR 2" x 3" x .125"					TYPE 3 STORM BAR 2" x 4" x .125"				
	STORM BAR SPACING *					STORM BAR SPACING *					STORM BAR SPACING *				
	≤ 3'-0"	3' TO 4'	4' TO 5'	5' TO 6'	6' TO 6.5'	≤ 3'-0"	3' TO 4'	4' TO 5'	5' TO 6'	6' TO 6.5'	≤ 3'-0"	3' TO 4'	4' TO 5'	5' TO 6'	6' TO 6.5'
40	6'-0"	6'-0"	6'-0"	6'-0"	6'-0"	8'-0"	8'-0"	7'-7"	7'-3"	7'-1"	10'-0"	9'-6"	9'-0"	8'-7"	8'-7"
45	6'-0"	6'-0"	6'-0"	5'-11"	5'-10"	8'-0"	7'-9"	7'-4"	6'-11"	6'-8"	10'-0"	9'-3"	8'-9"	8'-4"	8'-2"
50	6'-0"	6'-0"	6'-0"	5'-9"	5'-7"	8'-0"	7'-7"	7'-2"	6'-7"	6'-4"	9'-8"	9'-0"	8'-6"	8'-1"	7'-9"
55	6'-0"	6'-0"	5'-11"	5'-6"	5'-4"	7'-11"	7'-5"	6'-11"	6'-3"	–	9'-6"	8'-10"	8'-4"	7'-8"	–
60	6'-0"	6'-0"	5'-9"	5'-3"	5'-1"	7'-9"	7'-3"	6'-7"	6'-2"	–	9'-3"	8'-7"	8'-1"	7'-5"	–
65	6'-0"	6'-0"	5'-7"	5'-1"	4'-10"	7'-7"	7'-1"	6'-4"	5'-9"	–	9'-1"	8'-5"	7'-9"	7'-1"	–
70	6'-0"	5'-11"	5'-4"	4'-11"	4'-8"	7'-6"	6'-10"	6'-1"	5'-7"	–	8'-11"	8'-3"	7'-6"	6'-10"	–
75	6'-0"	5'-9"	5'-2"	4'-9"	4'-6"	7'-4"	6'-7"	5'-11"	5'-5"	–	8'-9"	8'-1"	7'-3"	6'-7"	–
80	6'-0"	5'-7"	5'-0"	4'-7"	4'-5"	7'-3"	6'-5'	5'-9"	5'-3"	–	8'-7"	7'-10"	7'-0"	6'-5"	–
85	6'-0"	5'-5"	4'-10"	4'-5"	4'-3"	7'-1"	6'-2"	5'-6"	5'-1"	–	8'-6"	7'-7"	6'-9"	6'-2"	–
90	5'-11"	5'-3"	4'-9"	4'-4"	4'-2"	6'-11"	6'-0"	5'-5"	4'-11"	–	8'-4"	7'-5"	6'-7"	6'-0"	–
95	5'-10"	5'-2"	4'-7"	4'-2"	4'-0"	6'-9"	5'-10"	5'-3"	4'-9"	–	8'-3"	7'-2"	6'-5"	5'-10"	–
100	5'-9"	5'-0"	4'-6"	4'-1"	3'-11"	6'-7"	5'-9"	5'-1"	4'-8"	–	8'-1"	7'-0"	6'-3"	5'-9"	–
105	5'-8'	4'-11"	4'-4"	4'-0"	3'-10"	6'-5"	5'-7"	5'-0"	4'-7"	–	7'-11"	6'-10"	6'-2"	5'-7"	–
110	5'-6"	4'-9"	4'-3"	3'-11"	3'-9"	6'-3"	5'-5"	4'-10"	4'-5"	–	7'-8"	6'-8"	6'-0"	5'-5"	–
115	5'-5"	4'-8"	4'-3"	3'-10"	3'-8"	6'-2"	5'-4"	4'-9"	4'-4"	–	7'-6"	6'-6"	5'-10"	5'-4"	–
120	5'-3"	4'-7"	4'-1"	3'-9"	3'-7"	6'-0"	5'-3"	4'-8"	4'-3"	–	7'-5"	6'-5"	5'-9"	5'-3"	–
125	5'-2"	4'-6"	4'-0"	3'-8"	3'-6"	5'-11"	5'-1"	4'-7"	4'-2"	–	7'-3"	6'-3"	5'-7"	5'-1"	–
130	5'-1"	4'-5"	3'-11"	3'-7"	3'-5"	5'-9"	5'-0"	4'-6"	4'-1"	–	7'-1"	6'-2"	5'-6"	5'-0"	–
135	5'-0"	4'-4"	3'-10"	3'-6"	3'-5"	5'-8"	4'-11"	4'-5"	4'-0"	–	6'-11"	6'-0"	5'-5"	4'-11"	–
140	4'-11"	4'-3"	3'-9"	3'-5"	3'-4"	5'-7"	4'-10"	4'-4"	3'-11"	–	6'-10"	5'-11"	5'-3"	4'-10"	–
145	4'-10"	4'-2"	3'-9"	3'-5"	3'-3"	5'-6"	4'-9"	4'-3"	3'-10"	–	6'-9"	5'-10"	5'-2"	4'-9"	–
150	4'-9"	4'-1"	3'-8"	3'-4"	3'-2"	5'-5"	4'-8"	4'-2"	3'-10"	–	6'-7"	5'-9"	5'-1"	4'-8"	–
155	4'-8"	4'-0"	3'-7"	3'-3"	3'-2"	5'-4"	4'-7"	4'-1"	3'-9"	–	6'-6"	5'-7"	5'-0"	4'-7"	–
160	4'-7"	3'-11"	3'-6"	3'-3"	3'-1"	5'-3"	4'-6"	4'-0"	3'-8"	–	6'-5"	5'-6"	4'-11"	4'-6"	–
165	4'-6"	3'-11"	3'-6"	3'-2"	3'-1"	5'-2"	4'-5"	4'-0"	3'-8"	–	6'-3"	5'-5"	4'-10'	4'-5"	–
170	4'-5"	3'-10"	3'-5"	3'-2"	3'-0"	5'-1"	4'-5"	3'-11"	3'-7"	–	6'-2"	5'-4"	4'-10'	4'-5"	–
175	4'-4"	3'-9"	3'-5"	3'-1"	3'-0"	5'-0"	4'-4"	3'-10"	3'-6"	–	6'-1"	5'-3"	4'-9"	4'-4"	–
180	4'-4"	3'-9"	3'-4"	3'-1"	2'-11"	4'-11"	4'-3"	3'-10"	3'-6"	–	6'-0"	5'-3"	4'-8"	4'-3"	–
185	4'-3"	3'-8"	3'-4"	3'-0"	2'-11"	4'-10"	4'-2"	3'-9"	3'-5"	–	5'-11"	5'-2"	4'-7"	4'-2"	–
190	4'-2"	3'-8"	3'-3"	3'-0"	2'-10"	4'-9"	4'-2"	3'-9"	3'-5"	–	5'-10"	5'-1"	4'-6"	4'-2"	–
195	4'-2"	3'-7"	3'-2"	2'-11"	2'-10"	4'-9"	4'-1"	3'-8"	3'-4"	–	5'-9"	5'-0"	4'-6"	4'-1"	–
200	4'-1"	3'-6"	3'-2"	2'-11"	2'-9"	4'-8"	4'-0"	3'-7"	3'-4"	–	5'-9"	4'-11"	4'-5"	4'-0"	–
205	4'-0"	3'-6"	3'-2"	2'-10"	2'-9"	4'-7"	4'-0"	3'-7"	3'-3"	–	5'-8"	4'-11"	4'-4"	4'-0"	–
210	4'-0"	3'-5"	3'-1"	2'-10"	2'-9"	4'-7"	3'-11"	3'-6"	3'-3"	–	5'-7"	4'-10'	4'-4"	3'-11"	–
215	3'-11"	3'-5"	3'-1"	2'-9"	2'-8"	4'-6"	3'-11"	3'-6"	3'-2"	–	5'-6"	4'-9"	4'-3"	3'-11"	–
220	3'-11"	3'-5"	3'-0"	2'-9"	2'-8"	4'-5"	3'-10"	3'-5"	3'-2"	–	5'-5"	4'-9"	4'-3"	3'-10"	–
225	3'-10"	3'-4"	3'-0"	2'-9"	2'-7"	4'-5"	3'-10"	3'-5"	3'-1"	–	5'-5"	4'-8"	4'-2"	3'-10"	–

* STORM BAR SPACING SHALL BE SUCH THAT MAXIMUM SLAT SPAN SHALL NOT BE EXCEEDED.

PRODUCT REVIEWED as complying with the Florida Building Code
Acceptance No. 03-0123.11
Expiration Date 06/07/04
By
Miami Dade Product Control Division

F.B.C. (H.V.H.Z.) / MIAMI-DADE COUNTY

JUN 03 2003

TILTECO INC.
TILLIT TESTING & ENGINEERING COMPANY
6595 N.W. 36th. St., Ste. 217 – VIRGINIA GARDENS, Fl. 33166
Phone : (305)871-1530 . Fax : (305)871-1531
EB-0006719
WALTER A. TILLIT Jr., P. E.
FLORIDA Lic. # 44167

60mm SLAT ROLL-UP SHUTTER

ROLLINGSHIELD, INC.
2500 N.W. 74th AVENUE
MIAMI, FLORIDA 33122

REV. No	DESCRIPTION	DATE	REV. No	DESCRIPTION	DATE
1	OLD 00-176	11/5/02	3	–	–
2	–	–	4	–	–

AS SHOWN
SCALE

11/5/02
DATE

02-534
DRAWING No

SHEET 13 OF 16

STORM BAR LOADING CHART

MAXIMUM DESIGN PRESSURE RATING "W" (p. s. f.) AND CORRESPONDING MAXIMUM SPAN "L" FOR A GIVEN TYPE OF STORM BAR AND STORM BAR SPACING.

(USE NEGATIVE PRESSURE VALUES AS PER ASCE 7-98)

MAX. SPAN FOR STORM BARS W/REGULAR CONCRETE ANCHORS

MAXIMUM DESIGN LOAD "W" (p.s.f.)	TYPE 4 STORM BAR 2" x 4" x .250"					TYPE 5 STORM BAR (2) 2" x 3" x .125"					TYPE 6 STORM BAR (2) 2" x 4" x .250"				
	STORM BAR SPACING *					STORM BAR SPACING *					STORM BAR SPACING *				
	⩽ 3'-0"	3' TO 4'	4' TO 5'	5' TO 6'	6' TO 6.5'	⩽ 3'-0"	3' TO 4'	4' TO 5'	5' TO 6'	6' TO 6.5'	⩽ 3'-0"	3' TO 4'	4' TO 5'	5' TO 6'	6' TO 6.5'
40	11'-10"	11'-0"	10'-5"	9'-11"	9'-11"	10'-3"	9'-6"	9'-0"	8'-7"	8'-5"	14'-1"	13'-1"	12'-5"	11'-10"	11'-7"
45	11'-6"	10'-8"	10'-1"	9'-8"	9'-8"	9'-11"	9'-3"	8'-9"	8'-4"	8'-2"	13'-8"	12'-9"	12'-0"	11'-6"	11'-3"
50	11'-2"	10'-5"	9'-10"	9'-5"	9'-5"	9'-8"	9'-0"	8'-7"	8'-1"	8'-0"	13'-4"	12'-5"	11'-9"	11'-2"	11'-0"
55	10'-11"	10'-2"	9'-7"	9'-2"	–	9'-5"	8'-9"	8'-4"	7'-11"	–	13'-0"	12'-1"	11'-5"	10'-11"	–
60	10'-8"	10'-0"	9'-5"	9'-0"	–	9'-3"	8'-7"	8'-1"	7'-9"	–	12'-9"	11'-10"	11'-2"	10'-8"	–
65	10'-6"	9'-9"	9'-3"	8'-10"	–	9'-1"	8'-5"	8'-0"	7'-7"	–	12'-6"	11'-7"	11'-0"	10'-6"	–
70	10'-4"	9'-7"	9'-1"	8'-8"	–	8'-11"	8'-3"	7'-10"	7'-6"	–	12'-3"	11'-5"	10'-9"	10'-4"	–
75	10'-1"	9'-5"	8'-11"	8'-6"	–	8'-9"	8'-1"	7'-8	7'-4"	–	12'-0"	11'-2"	10'-7"	10'-1"	–
80	9'-11"	9'-3"	8'-9"	8'-4"	–	8'-7"	8'-0"	7'-7"	7'-3"	–	11'-10"	11'-0"	10'-5"	9'-11"	–
85	9'-10"	9'-2"	8'-8"	8'-3"	–	8'-5"	7'-10"	7'-5"	7'-1"	–	11'-8"	10'-10"	10'-3"	9'-10"	–
90	9'-8"	9'-0"	8'-6"	8'-0"	–	8'-4"	7'-9"	7'-4"	6'-11"	–	11'-6"	10'-8"	10'-1"	9'-8"	–
95	9'-6"	8'-10"	8'-5"	7'-9"	–	8'-3"	7'-8"	7'-3"	6'-9"	–	11'-4"	10'-7"	10'-0"	9'-6"	–
100	9'-5"	8'-9"	8'-3"	7'-7"	–	8'-1"	7'-7"	7'-2"	6'-7"	–	11'-2"	10'-5"	9'-10"	9'-5"	–
105	9'-4"	8'-8"	8'-1"	7'-5"	–	8'-0"	7'-6"	7'-1"	6'-5"	–	11'-1"	10'-4"	9'-9"	9'-4"	–
110	9'-2"	8'-7"	7'-11"	7'-3"	–	7'-11"	7'-5"	6'-11"	6'-3"	–	10'-11"	10'-2"	9'-7"	9'-2"	–
115	9'-1"	8'-6"	7'-9"	7'-1"	–	7'-10"	7'-4"	6'-9"	6'-2"	–	10'-10"	10'-1"	9'-6"	9'-1"	–
120	9'-0"	8'-4"	7'-7"	6'-11"	–	7'-9"	7'-3"	6'-7"	6'-0"	–	10'-8"	9'-11"	9'-5"	9'-0"	–
125	8'-11"	8'-3"	7'-5"	6'-9"	–	7'-8"	7'-2"	6'-6"	5'-11"	–	10'-7"	9'-10"	9'-4"	8'-11"	–
130	8'-10"	8'-2"	7'-3"	6'-8"	–	7'-7"	7'-1"	6'-4"	5'-9"	–	10'-6"	9'-9"	9'-3"	8'-10"	–
135	8'-9"	8'-0"	7'-2"	6'-6"	–	7'-6"	6'-11"	6'-3"	5'-8"	–	10'-5"	9'-8"	9'-2"	8'-9"	–
140	8'-8"	7'-11"	7'-0"	6'-5"	–	7'-6"	6'-10"	6'-1"	5'-7"	–	10'-4"	9'-7"	9'-1"	8'-8"	–
145	8'-7"	7'-8"	6'-11"	6'-3"	–	7'-5"	6'-8"	6'-0"	5'-6"	–	10'-2"	9'-6"	9'-0"	8'-7"	–
150	8'-6"	7'-7"	6'-9"	6'-2"	–	7'-4"	6'-7"	5'-11"	5'-5"	–	10'-1"	9'-5"	8'-11"	8'-6"	–
155	8'-5"	7'-5"	6'-8"	6'-1"	–	7'-3"	6'-6"	5'-10"	5'-4"	–	10'-0"	9'-4"	8'-10"	8'-5"	–
160	8'-4"	7'-4"	6'-7"	6'-0"	–	7'-3"	6'-5"	5'-9"	5'-3"	–	9'-11"	9'-3"	8'-9"	8'-4"	–
165	8'-4"	7'-3"	6'-5"	5'-11"	–	7'-2"	6'-3"	5'-7"	5'-2"	–	9'-11"	9'-2"	8'-8"	8'-4"	–
170	8'-3"	7'-1"	6'-4"	5'-10"	–	7'-1"	6'-2"	5'-6"	5'-1"	–	9'-10"	9'-2"	8'-8"	8'-3"	–
175	8'-1"	7'-0"	6'-3"	5'-9"	–	7'-1"	6'-1"	5'-6"	5'-0"	–	9'-9"	9'-1"	8'-7"	8'-2"	–
180	8'-0"	6'-11"	6'-2"	5'-8"	–	6'-11"	6'-0"	5'-5"	4'-11"	–	9'-8"	9'-0"	8'-6"	8'-1"	–
185	7'-10"	6'-10"	6'-1"	5'-7"	–	6'-10"	5'-11"	5'-4"	4'-10"	–	9'-7"	8'-11"	8'-5"	8'-0"	–
190	7'-9"	6'-9"	6'-0"	5'-6"	–	6'-9"	5'-10"	5'-3"	4'-9"	–	9'-6"	8'-11"	8'-5"	7'-11"	–
195	7'-8"	6'-8"	5'-11"	5'-5"	–	6'-8"	5'-9"	5'-2"	4'-9"	–	9'-6"	8'-10"	8'-4"	7'-9"	–
200	7'-7"	6'-7"	5'-10"	5'-4"	–	6'-7"	5'-9"	5'-1"	4'-8"	–	9'-5"	8'-9"	8'-3	7'-8"	–
205	7'-6"	6'-6"	5'-10"	5'-3"	–	6'-6"	5'-8"	5'-1"	4'-7"	–	9'-4"	8'-9"	8'-3"	7'-7"	–
210	7'-5"	6'-5"	5'-9"	5'-3"	–	6'-5"	5'-7"	5'-0"	4'-7"	–	9'-4"	8'-8"	8'-2"	7'-6"	–
215	7'-4"	6'-4"	5'-8"	5'-2"	–	6'-4"	5'-6"	4'-11"	4'-6"	–	9'-3'	8'-7"	8'-1"	7'-5"	–
220	7'-3"	6'-2"	5'-7"	5'-1"	–	6'-3"	5'-5"	4'-10'	4'-5"	–	9'-2"	8'-7"	8'-0"	7'-4"	–
225	7'-2"	6'-1"	5'-6"	5'-1"	–	6'-3"	5'-5"	4'-10'	4'-5"	–	9'-2"	8'-6"	7'-11"	7'-3"	–

* STORM BAR SPACING SHALL BE SUCH THAT MAXIMUM SLAT SPAN SHALL NOT BE EXCEEDED.

PRODUCT REVISED
as complying with the Florida Building Code
Acceptance No. 03-0123.11
Expiration Date 06/07/04
By
Miami Dade Product Control Division

F.B.C. (H.V.H.Z.) / MIAMI-DADE COUNTY

JUN 03 2003

TILTECO INC.
TILLIT TESTING & ENGINEERING COMPANY
6595 N.W. 36th. St., Ste. 217 – VIRGINIA GARDENS, Fl. 33166
Phone : (305)871-1530 , Fax : (305)871-1531
EB-0006719
WALTER A. TILLIT Jr., P. E.
FLORIDA Lic. # 44167

60mm SLAT ROLL-UP SHUTTER

ROLLINGSHIELD, INC.
2500 N.W. 74th AVENUE
MIAMI, FLORIDA 33122

REV. No	DESCRIPTION	DATE	REV. No	DESCRIPTION	DATE
1	OLD 00-176	11/5/02	3	–	–
2	–	–	4	–	–

AS SHOWN
SCALE

11/5/02
DATE

02-534
DRAWING No

SHEET 14 OF 16

STORM BAR LOADING CHART

MAXIMUM DESIGN PRESSURE RATING "W" (p. s. f.) AND CORRESPONDING MAXIMUM SPAN "L" FOR A GIVEN TYPE OF STORM BAR AND STORM BAR SPACING.

(USE NEGATIVE PRESSURE VALUES AS PER ASCE 7-98)

MAX. SPAN FOR STORM BARS W/SPRING-LOADED SYSTEM

MAXIMUM DESIGN LOAD "W" (p.s.f.)	TYPE 1 STORM BAR 2" x 2" x .188"		TYPE 2 STORM BAR 2" x 3" x .125"		TYPE 3 STORM BAR 2" x 4" x .125"	
	STORM BAR SPACING *		STORM BAR SPACING *		STORM BAR SPACING *	
	⩽ 3'-0"	3' TO 4'	⩽ 3'-0"	3' TO 4'	⩽ 3'-0"	3' TO 4'
40	4'-5"	3'-4"	8'-0"	6'-0"	10'-0"	7'-9"
45	3'-11"	3'-0"	7'-1"	5'-4"	9'-2"	6'-11"
50	3'-7"	2'-8"	6'-5"	4'-10"	8'-3"	6'-2"
55	3'-3"	2'-5"	5'-10"	4'-4"	7'-6"	5'-8"
60	3'-0"	2'-3"	5'-4"	4'-0"	6'-11"	5'-2"
65	2'-9"	2'-1"	4'-11"	3'-8"	6'-4"	4'-9"
70	2'-6"	1'-11"	4'-7"	3'-5"	5'-11"	4'-5"
75	2'-4"	1'-9"	4'-3"	3'-2"	5'-6"	4'-1"

* STORM BAR SPACING SHALL BE SUCH THAT MAXIMUM SLAT SPAN SHALL NOT BE EXCEEDED.

STORM BAR LOADING CHART

MAXIMUM DESIGN PRESSURE RATING "W" (p. s. f.) AND CORRESPONDING MAXIMUM SPAN "L" FOR A GIVEN TYPE OF STORM BAR AND STORM BAR SPACING.

(USE NEGATIVE PRESSURE VALUES AS PER ASCE 7-98)

MAX. SPAN FOR STORM BARS W/SPRING-LOADED SYSTEM

MAXIMUM DESIGN LOAD "W" (p.s.f.)	TYPE 4 STORM BAR 2" x 4" x .250"		TYPE 5 STORM BAR (2) 2" x 3" x .125"		TYPE 6 STORM BAR (2) 2" x 4" x .250"	
	STORM BAR SPACING *		STORM BAR SPACING *		STORM BAR SPACING *	
	⩽ 3'-0"	3' TO 4'	⩽ 3'-0"	3' TO 4'	⩽ 3'-0"	3' TO 4'
40	10'-4"	7'-9"	10'-3"	9'-6"	14'-1"	12'-1"
45	9'-2"	6'-11"	9'-11"	8'-11"	13'-8"	10'-8"
50	8'-3"	6'-2"	9'-8"	8'-0"	12'-10"	9'-8"
55	7'-6"	5'-8"	9'-5"	7'-3"	11'-8"	8'-9"
60	6'-11"	5'-2"	8'-11"	6'-8"	10'-8"	8'-0"
65	6'-4"	4'-9"	8'-2"	6'-2"	9'-11"	7'-5"
70	5'-11"	4'-5"	7'-7"	5'-9"	9'-2"	6'-11"
75	5'-6"	4'-1"	7'-1"	5'-4"	8'-7"	6'-5"

* STORM BAR SPACING SHALL BE SUCH THAT MAXIMUM SLAT SPAN SHALL NOT BE EXCEEDED.

PRODUCT REVIEWED
is compliant with the Florida
Building Code
Acceptance No 03-0123.11
Expiration Date 06/07/09
By
Miami Dade Product Control
Division

JUN 03 2003

F.B.C. (H.V.H.Z.) / MIAMI-DADE COUNTY

TILTECO INC.
TILLIT TESTING & ENGINEERING COMPANY
6595 N.W. 36th. St., Sts. 217 – VIRGINIA GARDENS, FL 33166
Phone : (305)871-1530 . Fax : (305)871-1531
EB-0006719
WALTER A. TILLIT Jr., P. E.
FLORIDA Lic. # 44167

60mm SLAT ROLL-UP SHUTTER

ROLLINGSHIELD, INC.
2500 N.W. 74th AVENUE
MIAMI, FLORIDA 33122

REV. No	DESCRIPTION	DATE	REV. No	DESCRIPTION	DATE
1	OLD 00-176	11/6/02	3	–	–
2	–	–	4	–	–

AS SHOWN
SCALE

11/5/02
DATE

02-534
DRAWING No

SHEET 14A OF 16

HEADER LOADING CHART

MAXIMUM NEGATIVE DESIGN PRESSURE RATING "W" (p. s. f.) AND CORRESPONDING MAXIMUM SPAN "L" FOR A GIVEN TYPE OF HEADER.

(USE NEGATIVE PRESSURE VALUES AS PER ASCE 7-98)

MAXIMUM DESIGN LOAD "W" (p.s.f.)	TYPE 1 HEADER 2" x 3" X .125"		TYPE 2 HEADER 2" x 4" X .125"		TYPE 3 HEADER 2" x 4" X .250"				
	STORM BAR HEIGHT		STORM BAR HEIGHT		STORM BAR HEIGHT				
	≤ 5'-0"	5' TO 7'	≤ 5'-0"	5' TO 8'	≤ 6'-0"	6' TO 8'	8' TO 10'	10' TO 12'	12' TO 14'
40.0	11'-4"	9'-8"	13'-6"	11'-2"	14'-11"	13'-10"	13'-1"	12'-2"	11'-3"
45.0	10'-9"	9'-1"	13'-1"	10'-6"	14'-5"	13'-5"	12'-6"	11'-5"	10'-7"
50.0	10'-3"	8'-8"	12'-7"	10'-0"	14'-1"	13'-1"	11'-11"	10'-10"	10'-1"
55.0	9'-9"	8'-3"	12'-0"	9'-6"	13'-9"	12'-8"	11'-4"	10'-4"	9'-7"
60.0	9'-4"	7'-11"	11'-6"	9'-1"	13'-5"	12'-2"	10'-10"	9'-11"	9'-2"
65.0	8'-11"	7'-7"	11'-1"	8'-9"	13'-2"	11'-8"	10'-5"	9'-6"	8'-10"
70.0	8'-8"	7'-4"	10'-8"	8'-5"	12'-11"	11'-3"	10'-1"	9'-2"	8'-6"
75.0	8'-4"	7'-1"	10'-3"	8'-2"	12'-6"	10'-10"	9'-9"	8'-10"	8'-3"
80.0	8'-1"	6'-10"	10'-0"	7'-10"	12'-2"	10'-6"	9'-5"	8'-7"	7'-11"
85.0	7'-10"	6'-7"	9'-8"	7'-8"	11'-9"	10'-2"	9'-1"	8'-4"	7'-9"
90.0	7'-7"	6'-5"	9'-5"	7'-5"	11'-5"	9'-11"	8'-10"	8'-1"	7'-6"
95.0	7'-5"	6'-3"	9'-2"	7'-3"	11'-2"	9'-8"	8'-8"	7'-11"	7'-4"
100.0	7'-3"	6'-1"	8'-11"	7'-1"	10'-10"	9'-5"	8'-5"	7'-8"	7'-1"
105.0	7'-1"	6'-0"	8'-8"	6'-10"	10'-7"	9'-2"	8'-3"	7'-6"	6'-11"
110.0	6'-11"	5'-10"	8'-6"	6'-9"	10'-4"	9'-0"	8'-0"	7'-4"	6'-9"
115.0	6'-9"	5'-8"	8'-4"	6'-7"	10'-2"	8'-9"	7'-10"	7'-2"	6'-8"
120.0	6'-7"	5'-7"	8'-2"	6'-5"	9'-11"	8'-7"	7'-8"	7'-0"	6'-6"
125.0	6'-6"	5'-5"	8'-0"	6'-4"	9'-9"	8'-5"	7'-6"	6'-10"	6'-4"
130.0	6'-4"	5'-4"	7'-10"	6'-2"	9'-6"	8'-3"	7'-5"	6'-9"	6'-3"
135.0	6'-3"	5'-3"	7'-8"	6'-1"	9'-4"	8'-1"	7'-3"	6'-7"	6'-1"

MAXIMUM DESIGN LOAD "W" (p.s.f.)	TYPE 1 HEADER 2" x 3" X .125"		TYPE 2 HEADER 2" x 4" X .125"		TYPE 3 HEADER 2" x 4" X .250"				
	STORM BAR HEIGHT		STORM BAR HEIGHT		STORM BAR HEIGHT				
	≤ 5'-0"	5' TO 7'	≤ 5'-0"	5' TO 8'	≤ 6'-0"	6' TO 8'	8' TO 10'	10' TO 12'	12' TO 14'
140.0	6'-1"	5'-2"	7'-6"	5'-11"	9'-2"	7'-11"	7'-1"	6'-6"	6'-0"
145.0	6'-0"	5'-1"	7'-5"	5'-10"	9'-0"	7'-10"	7'-0"	6'-5"	5'-11"
150.0	5'-11"	5'-0"	7'-3"	5'-9"	8'-10"	7'-8"	6'-10"	6'-3"	5'-10"
155.0	5'-10"	4'-11"	7'-2"	5'-8"	8'-9"	7'-7"	6'-9"	6'-2"	5'-9"
160.0	5'-9"	4'-10"	7'-1"	5'-7"	8'-7"	7'-5"	6'-8"	6'-1"	5'-7"
165.0	5'-7"	4'-9"	6'-11"	5'-6"	8'-5"	7'-4"	6'-7"	6'-0"	5'-6"
170.0	5'-6"	4'-8"	6'-10"	5'-5"	8'-4"	7'-3"	6'-5"	5'-11"	5'-5"
175.0	5'-6"	4'-7"	6'-9"	5'-4"	8'-3"	7'-1"	6'-4"	5'-10"	5'-4"
180.0	5'-5"	4'-7"	6'-8"	5'-3"	8'-1"	7'-0"	6'-3"	5'-9"	5'-4"
185.0	5'-4"	4'-6"	6'-7"	5'-2"	8'-0"	6'-11"	6'-2"	5'-8"	5'-3"
190.0	5'-3"	4'-5"	6'-6"	5'-1"	7'-11"	6'-10"	6'-1"	5'-7"	5'-2"
195.0	5'-2"	4'-4"	6'-5"	5'-1"	7'-9"	6'-9"	6'-0"	5'-6"	5'-1"
200.0	5'-1"	4'-4"	6'-4"	5'-0"	7'-8"	6'-8"	5'-11"	5'-5"	5'-0"
205.0	5'-1"	4'-3"	6'-3"	4'-11"	7'-7"	6'-7"	5'-11"	5'-4"	5'-0"
210.0	5'-0"	4'-3"	6'-2"	4'-10"	7'-6"	6'-6"	5'-10"	5'-4"	4'-11"
215.0	4'-11"	4'-2"	6'-1"	4'-10"	7'-5"	6'-5"	5'-9"	5'-3"	4'-10"
220.0	4'-10"	4'-1"	6'-0"	4'-9"	7'-4"	6'-4"	5'-8"	5'-2"	4'-10"
225.0	4'-10"	4'-1"	5'-11"	4'-8"	7'-3"	6'-3"	5'-7"	5'-1"	4'-9"

PRODUCT REVISED
in complying with the Florida
Building Code
Acceptance No. 03-0123.11
Expiration Date 06/07/09
By
Miami Dade Product Control
Division

F.B.C. (H.V.H.Z.) / MIAMI-DADE COUNTY

JUN 03 2003

TILTECO INC.
TILLIT TESTING & ENGINEERING COMPANY
6595 N.W. 36th. St., Ste. 217 – VIRGINIA GARDENS, Fl. 33166
Phone : (305)871-1530 . Fax : (305)871-1531
EB-0006719
WALTER A. TILLIT Jr., P. E.
FLORIDA Lic. # 44167

60mm SLAT ROLL-UP SHUTTER

AS SHOWN
SCALE

ROLLINGSHIELD, INC.
2500 N.W. 74th AVENUE
MIAMI, FLORIDA 33122

11/5/02
DATE

02-534
DRAWING No

REV. No	DESCRIPTION	DATE	REV. No	DESCRIPTION	DATE
1	OLD 00-176	11/5/02	3	–	–
2	–	–	4	–	–

SHEET 15 OF 16

MULLION LOADING CHART

MAXIMUM DESIGN PRESSURE RATING "W" (p. s. f.) AND CORRESPONDING MAXIMUM SPAN "L"(Ft) FOR A GIVEN TYPE OF MULLION AND MULLION SPACING (Ft.).

(USE NEGATIVE PRESSURE VALUES AS PER ASCE 7-98)

MAXIMUM DESIGN LOAD "W" (p.s.f.)	TYPE 1 MULLION 3" x 4" x .125"				TYPE 2 MULLION 4" x 4" x .250"				TYPE 3 MULLION 4" x 6" x .250"					
	MULLION SPACING				MULLION SPACING				MULLION SPACING					
	⩽ 4'-0"	4' TO 5'	5' TO 6'	6' TO 8'	⩽ 4'-0"	4' TO 5'	5' TO 6'	6' TO 8'	⩽ 4'-0"	4' TO 5'	5' TO 6'	6' TO 8'	8' TO 10'	10' TO 12
40.0	9'-8"	8'-4"	7'-10"	8'-2"	11'-9"	10'-11"	10'-3"	10'-8"	16'-4"	15'-2"	14'-3"	14'-10"	13'-10"	13'-0"
45.0	8'-8"	8'-0"	7'-7"	7'-10"	11'-3"	10'-6"	9'-10"	10'-3"	15'-8"	14'-7"	13'-9"	14'-4"	13'-3"	12'-6"
50.0	8'-4"	7'-9"	7'-3"	7'-7"	10'-11"	10'-1"	9'-6"	9'-11"	15'-2"	14'-0"	13'-3"	13'-10"	12'-10"	12'-1"
55.0	8'-1"	7'-6"	7'-1"	7'-4"	10'-7"	9'-10"	9'-3"	9'-7"	14'-8"	13'-8"	12'-10"	13'-5"	12'-5"	11'-8"
60.0	7'-10"	7'-3"	6'-10"	7'-2"	10'-3"	9'-6"	8'-11"	9'-4"	14'-3"	13'-3"	12'-5"	13'-0"	12'-1"	11'-4"
65.0	7'-8"	7'-1"	6'-8"	7'-0"	10'-0"	9'-3"	8'-9"	9'-1"	13'-11"	12'-11"	12'-2"	12'-8"	11'-10"	11'-1"
70.0	7'-5"	6'-11"	6'-6"	6'-10"	9'-9"	9'-0"	8'-6"	8'-10"	13'-7"	12'-7"	11'-10"	12'-4"	11'-5"	10'-9"
75.0	7'-3"	6'-9"	6'-4"	6'-8"	9'-6"	8'-10"	8'-4"	8'-8"	13'-3"	12'-3"	11'-7"	12'-1"	11'-2"	10'-6"
80.0	7'-2"	6'-7"	6'-3"	6'-6"	9'-4"	8'-8"	8'-2"	8'-6"	12'-11"	12'-0"	11'-4"	11'-10"	11'-0"	10'-4"
85.0	7'-0"	6'-6"	6'-1"	6'-4"	9'-2"	8'-6"	8'-0"	8'-4"	12'-8"	11'-9"	11'-1"	11'-7"	10'-9"	10'-1"
90.0	6'-10"	6'-4"	6'-0"	6'-3"	8'-11"	8'-4"	7'-10"	8'-2"	12'-5"	11'-7"	10'-11"	11'-4"	10'-6"	9'-11"
95.0	6'-9"	6'-3"	5'-11"	6'-2"	8'-10"	8'-2"	7'-8"	8'-0"	12'-3"	11'-4"	10'-8"	11'-2"	10'-4"	9'-9"
100.0	6'-7"	6'-2"	5'-9"	6'-0"	8'-8"	8'-0"	7'-7"	7'-11"	12'-0"	11'-2"	10'-6"	11'-0"	10'-2"	9'-7"
105.0	6'-6"	6'-1"	5'-8"	5'-11"	8'-6"	7'-11"	7'-5"	7'-9"	11'-10"	11'-0"	10'-4"	10'-9"	–	–
110.0	6'-5"	5'-11"	5'-7"	5'-10"	8'-5"	7'-9"	7'-4"	7'-8"	11'-8"	10'-10"	10'-2"	10'-7"	–	–
115.0	6'-4"	5'-10"	5'-6"	5'-9"	8'-3"	7'-8"	7'-3"	7'-6"	11'-6"	10'-8"	10'-0"	10'-6"	–	–
120.0	6'-3"	5'-9"	5'-5"	5'-8"	8'-2"	7'-7"	7'-1"	7'-5"	11'-4"	10'-6"	9'-11"	10'-4"	–	–
125.0	6'-2"	5'-8"	5'-4"	5'-7"	8'-0"	7'-5"	7'-0"	7'-4"	11'-2"	10'-4"	9'-9"	10'-2"	–	–
130.0	6'-1"	5'-8"	5'-4"	5'-6"	7'-11"	7'-4"	6'-11"	7'-3"	11'-0"	10'-3"	9'-8"	10'-0"	–	–
135.0	6'-0"	5'-7"	5'-3"	5'-5"	7'-10"	7'-3"	6'-10"	7'-2"	10'-11"	10'-1"	9'-6"	9'-11"	–	–
140.0	5'-11"	5'-6"	5'-2"	5'-5"	7'-9"	7'-2"	6'-9"	7'-1"	10'-9"	10'-0"	9'-5"	9'-10"	–	–
145.0	5'-10"	5'-5"	5'-1"	5'-4"	7'-8"	7'-1"	6'-8"	7'-0"	10'-8"	9'-10"	9'-3"	9'-8"	–	–
150.0	5'-9"	5'-4"	5'-1"	5'-3"	7'-7"	7'-0"	6'-7"	6'-11"	10'-6"	9'-9"	9'-2"	9'-7"	–	–
155.0	5'-9"	5'-4"	5'-0"	5'-3"	7'-6"	6'-11"	6'-6"	6'-10"	10'-5"	9'-8"	9'-1"	9'-6"	–	–
160.0	5'-8"	5'-3"	4'-11"	5'-2"	7'-5"	6'-10"	6'-5"	6'-9"	10'-3"	9'-7"	9'-0"	9'-4"	–	–
165.0	5'-7"	5'-2"	4'-11"	5'-1"	7'-4"	6'-10"	6'-5"	6'-8"	10'-2"	9'-5"	8'-11"	9'-3"	–	–
170.0	5'-7"	5'-2"	4'-10"	5'-1"	7'-3"	6'-9"	6'-4"	6'-7"	10'-1"	9'-4"	8'-10"	9'-2"	–	–
175.0	5'-6"	5'-1"	4'-10"	5'-0"	7'-2"	6'-8"	6'-3"	6'-6"	10'-0"	9'-3"	8'-9"	9'-1"	–	–
180.0	5'-5"	5'-1"	4'-9"	5'-0"	7'-1"	6'-7"	6'-3"	6'-6"	9'-11"	9'-2"	8'-8"	9'-0"	–	–
185.0	5'-5"	5'-0"	4'-9"	4'-11"	7'-1"	6'-6"	6'-2"	6'-5"	9'-10"	9'-1"	8'-7"	8'-11"	–	–
190.0	5'-4"	5'-0"	4'-8"	4'-10"	7'-0"	6'-6"	6'-1"	6'-4"	9'-9"	9'-0"	8'-6"	8'-10"	–	–
195.0	5'-4"	4'-11"	4'-8"	4'-10"	6'-11"	6'-5"	6'-1"	6'-4"	9'-8"	8'-11"	8'-5"	8'-9"	–	–
200.0	5'-3"	4'-11"	4'-7"	4'-9"	6'-10"	6'-4"	6'-0"	6'-3"	9'-7"	8'-10"	8'-4"	8'-8"	–	–
205.0	5'-3"	4'-10"	4'-7"	4'-9"	6'-10"	6'-4'	5'-11"	6'-2"	9'-6"	8'-9"	8'-3"	8'-8"	–	–
210.0	5'-2"	4'-10"	4'-6"	4'-9"	6'-9"	6'-3"	5'-11"	6'-2"	9'-5"	8'-8"	8'-2"	8'-7"	–	–
215.0	5'-2"	4'-9"	4'-6"	4'-8"	6'-8"	6'-3"	5'-10"	6'-1"	9'-4"	8'-8"	8'-2"	8'-6"	–	–
220.0	5'-1"	4'-9"	4'-5"	4'-8"	6'-8"	6'-2"	5'-10"	6'-1"	9'-3"	8'-7"	8'-1"	8'-5"	–	–
225.0	5'-1"	4'-8"	4'-5"	4'-7"	6'-7"	6'-2"	5'-9"	6'-0"	9'-2"	8'-6"	8'-0"	8'-4"	–	–

NOTES : REFER TO ELEVATIONS ON SHEET 1 OF 16

1-. FOR MULLIONS INSTALLED W/O STORM BARS

A) MULLION SPACING SHALL BE SUCH THAT MAXIMUM SLAT SPAN SHALL NOT BE EXCEEDED

2-. FOR MULLIONS INSTALLED W/ STORM BARS & HEADERS

A) MULLION SPACING SHALL BE SUCH THAT MAXIMUM HEADER SPAN SHALL NOT BE EXCEEDED

B) STORM BAR SPACING SHALL BE SUCH THAT MAXIMUM SLAT SPAN SHALL NOT BE EXCEEDED

PRODUCT REVISED
as complying with the Florida
Building Code
Acceptance No 03-0123.11
Expiration Date 06/07/09
By
Miami Dade Product Control
Division

F.B.C. (H.V.H.Z.) / MIAMI-DADE COUNTY

JUN 03 2003

TILTECO INC.
TILLIT TESTING & ENGINEERING COMPANY
5595 N.W. 36th. St., Ste. 217 – VIRGINIA GARDENS, FL 33166
Phone : (305)871-1530 . Fax : (305)871-1531
EB-0006719
WALTER A. TILLIT Jr., P. E.
FLORIDA Lic. # 44167

60mm SLAT ROLL-UP SHUTTER

ROLLINGSHIELD, INC.
2500 N.W. 74th AVENUE
MIAMI, FLORIDA 33122

REV. No	DESCRIPTION	DATE	REV. No	DESCRIPTION	DATE
1	OLD 00-176	11/6/02	3	–	–
2	–	–	4	–	–

AS SHOWN
SCALE

11/5/02
DATE

02-534
DRAWING No

SHEET 16 OF 16