MIAMI-DADE

BUILDING CODE COMPLIANCE OFFICE (BCCO)
PRODUCT CONTROL DIVISION

MIAMI-DADE COUNTY, FLORIDA
METRO-DADE FLAGLER BUILDING
140 WEST FLAGLER STREET, SUITE 1603
MIAMI, FLORIDA 33130-1563
(305) 375-2901 FAX (305) 375-2908

NOTICE OF ACCEPTANCE (NOA)

Clopay Building Products Company.
8585 Duke Blvd.
Mason, OH 45040

SCOPE: This NOA is being issued under the applicable rules and regulations governing the use of construction materials. The documentation submitted has been reviewed by Miami-Dade County Product Control Division and accepted by the Board of Rules and Appeals (BORA) to be used in Miami Dade County and other areas where allowed by the Authority Having Jurisdiction (AHJ).

This NOA shall not be valid after the expiration date stated below. The Miami-Dade County Product Control Division (In Miami Dade County) and/or the AHJ (in areas other than Miami Dade County) reserve the right to have this product or material tested for quality assurance purposes. If this product or material fails to perform in the accepted manner, the manufacturer will incur the expense of such testing and the AHJ may immediately revoke, modify, or suspend the use of such product or material within their jurisdiction. BORA reserves the right to revoke this acceptance, if it is determined by Miami-Dade County Product Control Division that this product or material fails to meet the requirements of the applicable building code.

This product is approved as described herein, and has been designed to comply with the High Velocity Hurricane Zone of the Florida Building Code.

DESCRIPTION: Sectional Garage Door12'- 2" Wide.

APPROVAL DOCUMENT: Drawing No. 102645, titled "M/N 524/520/C4ST/Cost/224", dated 11/13/02 with last revision on April 2003, sheets 1 of 1, prepared by Clopay Building Products Company, signed and sealed by M.W. Westerfield, P.E., bearing the Miami-Dade County Product Control Approval stamp with the Notice of Acceptance number and approval date by the Miami-Dade County Product Control Division.

MISSILE IMPACT RATING: Large and Small Missile Impact

LABELING: Each unit shall bear a permanent label with the manufacturer's name or logo, city, state and following statement: "Miami-Dade County Product Control Approved", unless otherwise noted herein.

RENEWAL of this NOA shall be considered after a renewal application has been filed and there has been no change in the applicable building code negatively affecting the performance of this product.

TERMINATION of this NOA will occur after the expiration date or if there has been a revision or change in the materials, use, and/or manufacture of the product or process. Misuse of this NOA as an endorsement of any product, for sales, advertising or any other purposes shall automatically terminate this NOA. Failure to comply with any section of this NOA shall be cause for termination and removal of NOA.

LIMITATION: This approval requires the manufacturer to do testing of all coils used to fabricate door panels under this Notice of Acceptance. A minimum of 2 specimens shall be cut from each coil and tensile tested according to ASTM E-8 by a Dade County approved laboratory selected and paid by the manufacturer. Every 3 months, four times a year, the manufacturer shall mail to this office: a copy of the tested reports with confirmation that the specimen were selected from coils at the manufacturer production facilities. And a notarized statement from the manufacturer that only coils with yield strength of 42,800 psi or more shall be used to make door panels for Dade County under this Notice of Acceptance

ADVERTISEMENT: The NOA number preceded by the words Miami-Dade County, Florida, and followed by the expiration date may be displayed in advertising literature. If any portion of the NOA is displayed, then it shall be done in its entirety.

INSPECTION: A copy of this entire NOA shall be provided to the user by the manufacturer or its distributors and shall be available for inspection at the job site at the request of the Building Official.

This NOA consists of this page 1 as well as the approval document mentioned above.

The submitted documentation was reviewed by **Candido F. Font PE.**

4/14/3

PRODUCT CONTROL ACCEPTED

Clopay Building Products Company.

NOTICE OF ACCEPTANCE: EVIDENCE SUBMITTED
(For File ONLY. Not part of NOA)

A DRAWINGS

1. Drawing prepared by Clopay Building Products Company titled "M/N 524/520/C4ST/COST/224", Drawing No. 102645 dated 11/13/02 with latest revision on April 2003 Sheets 1 of 1 signed and sealed by M. W. Westerfield, PE.

B TEST

1. Test Report on Large Missile Impact Test and Cyclic Wind Pressure Test of "Sectional Commercial Overhead Door" prepared by Hurricane Engineering and Testing Inc. Report #02-1268 dated 11/21/02 signed and sealed by R. E. Droz-Seda, PE.
2. Test Report on Uniform Static Air Pressure & Forced Entry Resistance Test "Sectional Commercial Overhead Door" prepared by Hurricane Engineering and Testing Inc., Report No. 02-1267, dated 11/21/02, signed and sealed by R. E. Droz-Seda, PE.

C CALCULATIONS

1. Anchor Calculations Sheets 1 and 2, prepared by Mark Westerfield PE, signed and sealed by M. W. Westerfield, PE on 01/19/03.

D MATERIAL CERTIFICATION

1 Tensile Test Report No. 9EM-1144, prepared by Q. C. Metallurgical, Inc dated 08/03/99, signed and sealed by K. Grate, PE.

E STATEMENTS

1 Letter of Compliance prepared by Mark Westerfield, PE, dated 01/19/03 signed & sealed by M. W. Westerfield, PE.

2 Letter on Non Financial Interest prepared by Mark Westerfield PE, dated 01/19/03 signed by M. W. Westerfield, PE

Candido F. Font, PE.
Senior Product Control Division
NOA No 03-0128.09
Expiration Date: May 08, 2008
Approval Date: May 08, 2003

CLOPAY MODELS 524, 520
IDEAL MODELS C4ST, CØST
HOLMES MODEL 224

MODELS 520, CØST: 20 GA STEEL SKIN
MODELS 524, C4ST, 224: 24 GA STEEL SKIN

REV	DATE	DESCRIPTION
1	4/2003	MISC. EDITORIAL REVISIONS

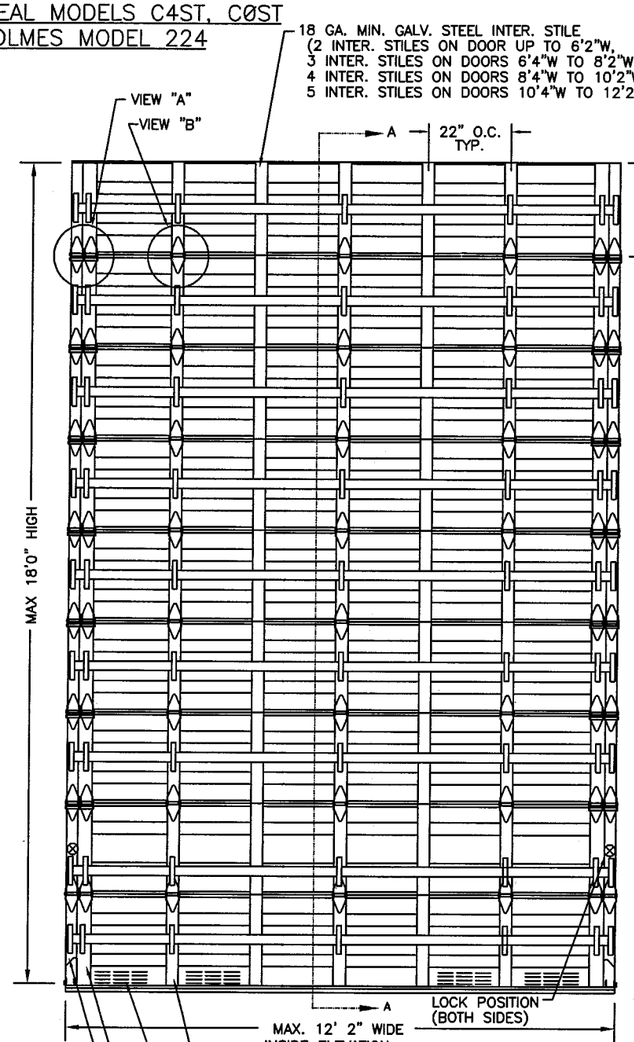

INSIDE ELEVATION

INTERMEDIATE STILES ATTACHED TO DOOR SKIN WITH PATENTED TOG-L-LOC SYSTEM (TOP & BOTTOM) AND ONE 1/8" RIVET AT EACH MAJOR RIB

LOCATION OF OPTIONAL VENTS (MAX. OPEN AREA: 60 IN^2)

INNER END STILES ATTACHED TO DOOR SKIN WITH #8 PHILLIPS TRUSS SHEET METAL SCREWS (4 TOTAL) TOP & BOTTOM.

OUTER END STILES ATTACHED TO DOOR SKIN WITH PATENTED TOG-L-LOC SYSTEM (TOP, BOTTOM, & CENTER)

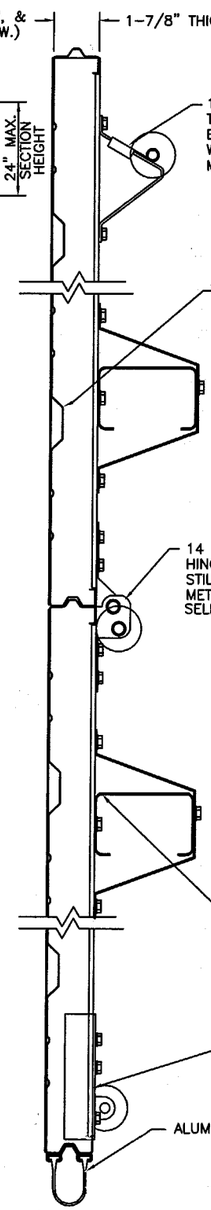

12 GA. GALV. STEEL TOP ROLLER BRACKET. EACH BRACKET ATTACHED W/4 #14X5/8" SHEET METAL SCREWS.

24 GA. (0.023" MIN.) G-40 MIN. GALV. STEEL SKIN (MIN. YIELD: 42.8 KSI) WITH BAKED-ON PRIMER AND POLYESTER TOP COAT APPLIED TO BOTH SIDES OF STEEL SKIN. EACH SECTION HAS TWO 1/2" DEEP RIBS ROLL-FORMED INTO PANEL.

14 GA. GALV. STEEL ROLLER (END) HINGE. EACH FASTENED TO END STILES W/(4) #14x5/8" SHEET METAL SCREWS AND W/(4) 1/4"x3/4" SELF TAPPING SCREWS.

(1) 4" TALL x 2-1/2" WIDE x 14 GA. GALV. C-CHANNEL PER DOOR SECTION, FASTENED TO DOOR AT STILE LOCATIONS: BY ONE 1/4"x3/4" SELF TAPPING SCREW AND BY (7) 1-1/4" WIDE MIN. x 16 GA. GALV. STEEL STRAPS WITH 1/4" x 3/4" SELF TAPPING SCREWS. STRAPS ARE ATTACHED TO STILE WITH (2) SELF TAPPING SCREWS AND TO SECTION WITH (1) SELF TAPPING SCREW TO C-CHANNEL.

12 GA. MIN. GALV. STEEL BOTTOM BRACKET. ATTACHED W/(4) #14x5/8" SHEET METAL SCREWS. & 12 GA. MIN. GALV. STEEL INNER BOTTOM BRACKETS ATTACHED W/(2) #14x5/8 SMS.

ALUMINUM EXTRUSION & VINYL WEATHERSTRIP.

SECTION A-A

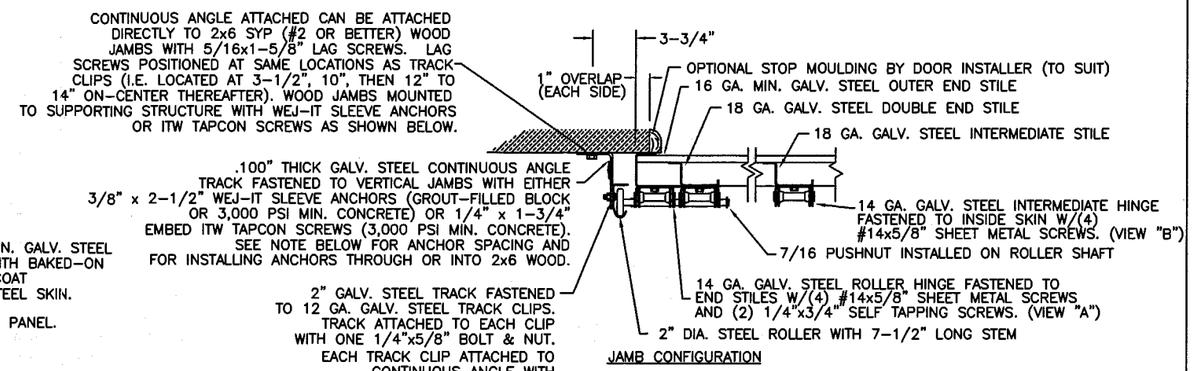

JAMB CONFIGURATION

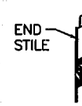

SLIDE BOLT LOCK ENGAGES INTO VERTICAL TRACK. ONE LOCK ON EACH SIDE OF DOOR. 7/8" x .139" x 2.64" THROW BAR. LOCK CONNECTED TO END STILES WITH W/(4) 1/4" x 3/4" SELF TAPPING SCREWS.

INSIDE SLIDE BOLT

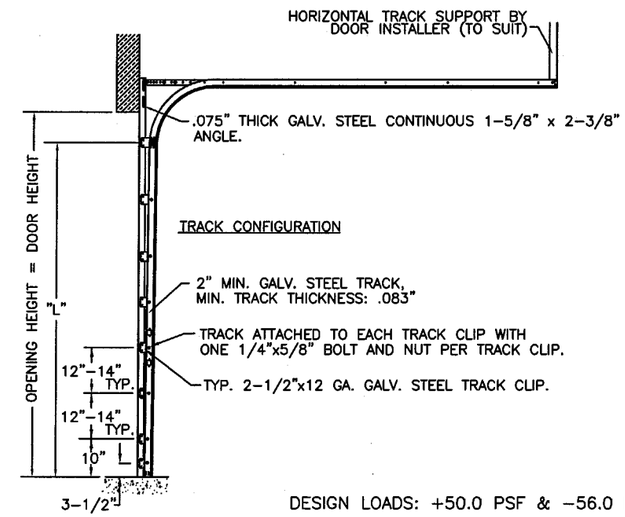

TRACK CONFIGURATION

DESIGN LOADS: +50.0 PSF & -56.0 PSF

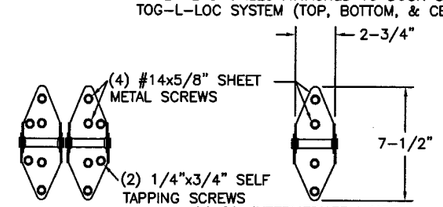

14 GA. END HINGE — VIEW "A"

14 GA. INTERMEDIATE HINGE — VIEW "B"

NOTE: 2x6 WOOD JAMBS ARE NOT REQUIRED, HOWEVER, IF DESIRED ON CONCRETE OR BLOCK WALLS, SLEEVE ANCHORS OR TAPCONS SHOULD BE INCREASED IN LENGTH BY 1-1/2" AND INSTALLED DIRECTLY THROUGH THE ANGLE AND 2x6 WOOD JAMBS INTO THE CONCRETE OR BLOCK WALLS. ANCHORS CAN BE (BUT NOT REQUIRED TO BE) COUNTERSUNK TO PROVIDE A FLUSH MOUNTING SURFACE. CONTINUOUS ANGLE TRACK CAN BE ANCHORED DIRECTLY TO GROUT REINFORCED BLOCK WALL OR 3,000 PSI MIN. CONCRETE COLUMN.

BLOCK CELLS SHALL BE FILLED WITH CONCRETE AND REINFORCED WITH CONTINUOUS #5 BAR EXTENDING INTO THE FOOTING AND INTO TIE BEAMS. ANCHORS CAN BE 3/8" x 2-1/2" WEJ-IT SLEEVE ANCHORS (GROUT-FILLED BLOCK OR 3,000 PSI MIN. CONCRETE WITH 3-3/4" MIN. EDGE DISTANCE) OR 1/4" x 1-3/4" EMBED ITW TAPCONS 3,000 PSI MIN. CONCRETE). ANCHORS POSITIONED AT SAME LOCATIONS AS TRACK CLIPS (I.E. ANCHORS LOCATED STARTING FROM BOTTOM AT 3-1/2", 10", THEN 12" TO 14" ON-CENTER THEREAFTER).

Approved as complying with the Florida Building Code
Date 05/08/03
NOA# 03-0128.07
Miami Dade Product Control Division
By

4/4/03

DESIGN ENGINEER
MARK W. WESTERFIELD, P.E.
MECHANICAL ENGINEERING
FLORIDA REGISTRATION No. 48495

THE SUPPORTING STRUCTURAL ELEMENTS ARE TO BE DESIGNED BY THE BUILDING ARCHITECT OR ENGINEER OF RECORD FOR THE LOADS SHOWN ON THIS DRAWING.

Clopay Building Products Company

CLOPAY BUILDING PRODUCTS COMPANY
8585 DUKE BLVD.
MASON, OH 45040
(513) 770 - 4800

SCALE:	CLASSIFICATION:	MAXIMUM DOOR SIZE: 12'2"W x 18'0"H	
DATE: 11/13/02	DESCRIPTION: M/N 524/520/C4ST/CØST/224		
DRAWN BY: RJK	B	DRAWING NUMBER: 102645	REV: 1
CHECKED BY: MWW			