MIAMI-DADE

BUILDING CODE COMPLIANCE OFFICE (BCCO)
PRODUCT CONTROL DIVISION

MIAMI-DADE COUNTY, FLORIDA
METRO-DADE FLAGLER BUILDING
140 WEST FLAGLER STREET, SUITE 1603
MIAMI, FLORIDA 33130-1563
(305) 375-2901 FAX (305) 375-2908

NOTICE OF ACCEPTANCE (NOA)

Best Access Systems
6161 East 75th Street
Indianapolis, IN 46250

SCOPE:
This NOA is being issued under the applicable rules and regulations governing the use of construction materials. The documentation submitted has been reviewed by Miami-Dade County Product Control Division and accepted by the Board of Rules and Appeals (BORA) to be used in Miami Dade County and other areas where allowed by the Authority Having Jurisdiction (AHJ).

This NOA shall not be valid after the expiration date stated below. The Miami-Dade County Product Control Division (In Miami Dade County) and/or the AHJ (in areas other than Miami Dade County) reserve the right to have this product or material tested for quality assurance purposes. If this product or material fails to perform in the accepted manner, the manufacturer will incur the expense of such testing and the AHJ may immediately revoke, modify, or suspend the use of such product or material within their jurisdiction. BORA reserves the right to revoke this acceptance, if it is determined by Miami-Dade County Product Control Division that this product or material fails to meet the requirements of the applicable building code.

This product is approved as described herein, and has been designed to comply with the Florida Building Code, including the High Velocity Hurricane Zone.

DESCRIPTION: Series "35H" Mortise Lockset w/ Deadbolt Hardware-Component Approval

APPROVAL DOCUMENT: Drawing No. **04-000-021a**, titled "**Series 35H Mortise Lockset With Deadbolt**", sheets 1 through 2 of 2, prepared by manufacturer, dated 03/22/04 and last revised on 04/20/04, signed and sealed by Frank L. Bennardo, P.E., bearing the Miami-Dade County Product Control Approval stamp with the Notice of Acceptance number and approval date by the Miami-Dade County Product Control Division.

MISSILE IMPACT RATING: Large and Small Missile Impact

LABELING: Each unit shall bear a permanent label with the manufacturer's name or logo, city, state and following statement: "Miami-Dade County Product Control Approved", unless otherwise noted herein.

RENEWAL of this NOA shall be considered after a renewal application has been filed and there has been no change in the applicable building code negatively affecting the performance of this product.

TERMINATION of this NOA will occur after the expiration date or if there has been a revision or change in the materials, use, and/or manufacture of the product or process. Misuse of this NOA as an endorsement of any product, for sales, advertising or any other purposes shall automatically terminate this NOA. Failure to comply with any section of this NOA shall be cause for termination and removal of NOA.

ADVERTISEMENT: The NOA number preceded by the words Miami-Dade County, Florida, and followed by the expiration date may be displayed in advertising literature. If any portion of the NOA is displayed, then it shall be done in its entirety.

INSPECTION: A copy of this entire NOA shall be provided to the user by the manufacturer or its distributors and shall be available for inspection at the job site at the request of the Building Official.
This NOA, consists of this page 1 and evidence page E-1, as well as approval document mentioned above
The submitted documentation was reviewed by **Ishaq I. Chanda, P.E.**

PRODUCT CONTROL ACCEPTED

NOA No 03-0128.10
Expiration Date: April 29, 2009
Approval Date: April 29, 2004

4/23/14

Best Access Systems

NOTICE OF ACCEPTANCE: EVIDENCE SUBMITTED

A. DRAWINGS

1. Manufacturer's parts and sections drawings.
2. Drawing No. **04-000-021a**, titled "**Series 35H Mortise Lockset With Deadbolt**", sheets 1 through 2 of 2, prepared by manufacturer, dated 03/22/04 and last revised on 04/20/04, signed and sealed by Frank L. Bennardo, P.E.

B. TESTS

1. Test Reports No. **FTL- 1684 & FTL-1860**, prepared by Fenestration Testing Laboratory, Inc., dated September 22, 1997 and February 25, 1998 respectively, signed and sealed by Late Gilbert Diamond, P.E., for the following tests:
   1) Air Infiltration Test, per FBC, PA 202-94
   2) Uniform Static Air Pressure Test, Loading per FBC, PA 202-94
   3) Water Resistance Test per FBC, PA 202-94
   4) Large Missile Impact Test per FBC, PA 201-94
   5) Cyclic Wind Pressure Loading per FBC, PA 203-94
   6) Forced Entry Test, per FBC 2411.3.2.1 (b) and PA 202-94

   along with manufacturer's parts and section drawings marked by Fenestration Testing Laboratory, Inc.

C. CALCULATIONS

1. None

D. QUALITY ASSURANCE

1. Miami Dade Building Code Compliance Office (BCCO).

E. MATERIAL CERTIFICATIONS

1. None

F. STATEMENTS

1 Letter of conformance & "No financial interest" dated March 22, 2004 issued by Frank L. Bennardo, P.E., Inc., Consulting Engineers, signed by Frank L. Bennardo, P.E.

2 Statement letter dated March 22, 2004, issued by Best Access System, designating Frank L. Bennardo, P. E. as consulting representative.

3 Statement letter by Republic Builder Products dated October 30, 2002, authorizing Best Access System to use above referenced test reports for obtaining component approval of the hardware that were used in Republic Bldg Product test report.

G. OTHER

1. Republic Builders NOA(s) 02-0328.03,01-0907.08, 98-1214.07 & 98-0515.04.

Ishaq I. Chanda

Ishaq I. Chanda, P.E.
Product Control Examiner
NOA No 03-0128.10
Expiration Date: April 29, 2009
Approval Date: April 29, 2004

SERIES 35H MORTISE LOCKSET WITH DEADBOLT

GENERAL NOTE:

1) THE SYSTEM DESCRIBED HEREIN HAS BEEN DESIGNED AND TESTED IN COMPLIANCE WITH THE FLORIDA BUILDING CODE 2001, HIGH VELOCITY HURRICANE ZONES, AND TEST PROTOCOLS TAS 201, 202, & 203.

LIMITATIONS:

1) THIS DEVICE IS APPROVED AS AN EQUAL ALTERNATIVE TO BE USED IN SINGLE OR DOUBLE 16ga STEEL COMMERCIAL DOORS, HOLDING CURRENT NOA. THE LOWEST DESIGN PRESSURE SHALL APPLY.

2) INSTALLATION OF THESE DEVICES REQUIRES A 16ga FORMED STEEL REINFORCEMENT PLATE (0.057" X 1.557" X 8.018") AT LOCK SIDE (STILE).

3) ELECTRICAL DEVICE INSTALLATION IS NOT PART OF THIS APPROVAL AND SUCH INSTALLATION MUST BE REVIEWED BY THE APPROPRIATE BUILDING AUTHORITY.

4) SINGLE DOOR: THIS DEVICE SHALL BE INSTALLED IN SINGLE 48" WIDE x 96" HIGH MAX COMMERCIAL STEEL DOORS. THE PANEL SHALL BE "CORE" FILLED, WITH 1-3/4" MINIMUM OVERALL THICKNESS.

5) DOUBLE DOORS: THIS DEVICE SHALL BE INSTALLED IN DOUBLE 74" WIDE x 86" HIGH MAX (37" WIDE PER PANEL) COMMERCIAL STEEL DOOR. THE PANEL SHALL BE "CORE" FILLED, WITH 1-3/4" MINIMUM OVERALL THICKNESS. THE INACTIVE PANEL OF THE DOUBLE DOOR SHALL BE SECURED WITH BOLTS AT TOP AND BOTTOM.

6) THIS PANIC DEVICE CAN BE INSTALLED AS PART OF A LARGE MISSILE IMPACT RESISTANT UNIT.

7) SCREW FOR 1 3/4" - 2" THICK DOOR SHOWN. LENGTH OF SCREW TO BE:
- 1.750" FOR 2 1/4" - 2 1/2" DOOR
- 2.250" FOR 2 3/4" - 3 1/2" DOOR
- 2.750" FOR 3 3/4" - 4 1/2" DOOR
- 3.250" FOR 4 3/4" - 5" DOOR

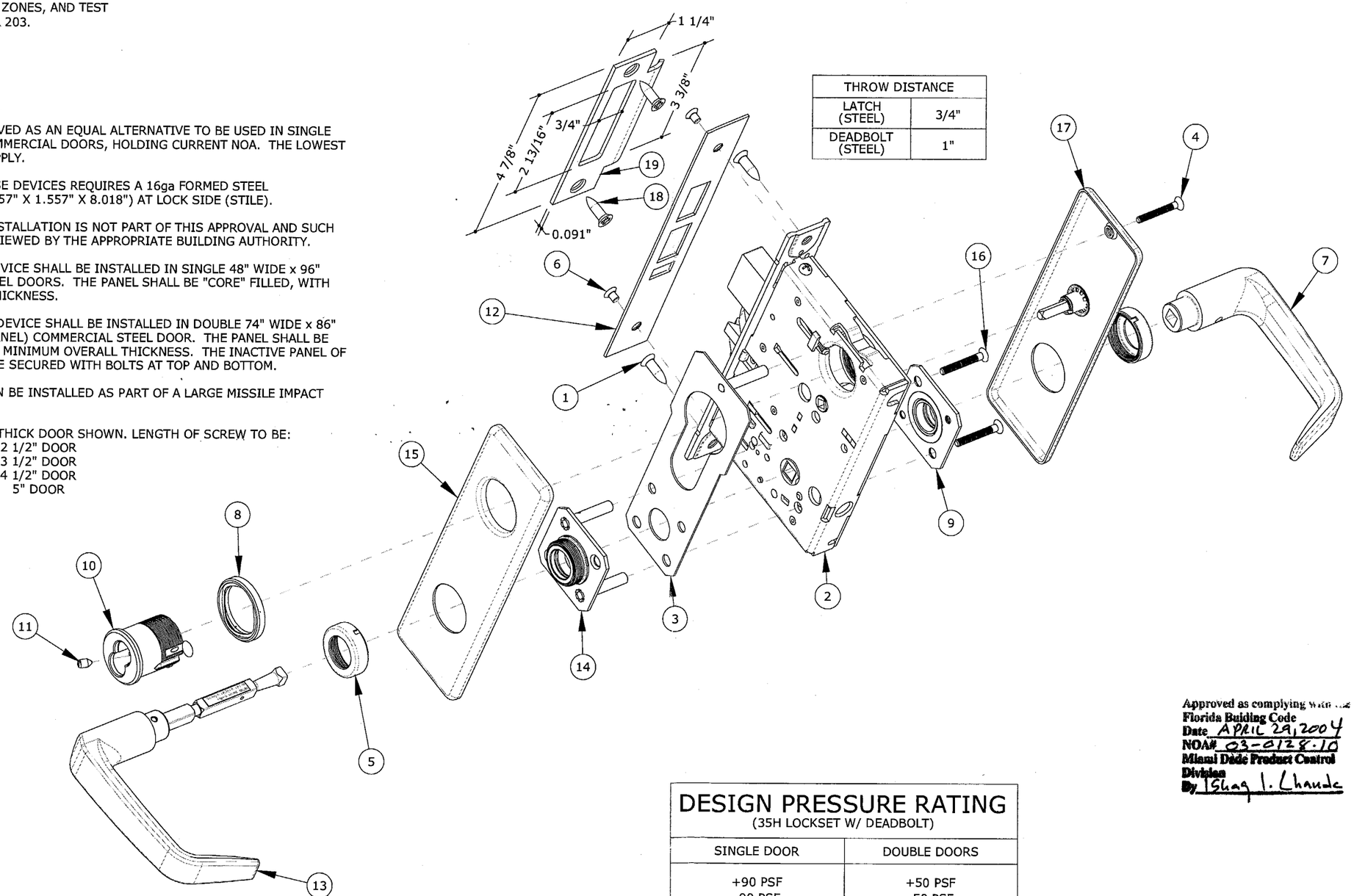

THROW DISTANCE	
LATCH (STEEL)	3/4"
DEADBOLT (STEEL)	1"

A/1 EXPLODED ISOMETRIC
N.T.S.

DESIGN PRESSURE RATING
(35H LOCKSET W/ DEADBOLT)

SINGLE DOOR	DOUBLE DOORS
+90 PSF -90 PSF	+50 PSF -50 PSF

Approved as complying with the Florida Buiding Code
Date APRIL 29, 2004
NOA# 03-0128.10
Miami Dade Product Control Division
By Ishaq I. Chande

FRANK L. BENNARDO, P.E.
PE0046549
04/20/2004

FRANK L. BENNARDO, P.E., INC.
CONSULTING ENGINEERS
4441 NORTH DIXIE HIGHWAY
BOCA RATON, FL 33431
(561) 391-2888 FAX: (561) 391-2862
WWW.FLBENGINEERING.COM

BEST ACCESS SYSTEMS
6161 EAST 75th STREET
INDIANAPOLIS, IN 46250
www.bestaccess.com

SERIES 35H MORTISE LOCKSET WITH DEADBOLT
COMPONENT APPROVAL - LARGE MISSILE IMPACT RESISTANT

REMARKS	DWN	CHKD	DATE
INIT ISSUE	CL	FLB	3/18/04
PROPRIETARY INFO OFF	CL	FLB	4/7/04
VALID W/ SEAL OFF	cl	flb	4/20/04
-	-	-	-
-	-	-	-

04-000-0021a
PAGE SCALE: VARIES
DESCRIPTION:
-
-

1 OF 2

04/20/2004 - 12:03pm clangley F:\Project Data\Client Project Files_Non Recurring Client Projects\04-000-0021 Best Access Systems - 2 Lockset NOAs\04-000-021a Mo04-000-021a_1a 35H Mortise Lockset + Deadbolt (NOA).dwg

SERIES 35H MORTISE LOCKSET WITH DEADBOLT

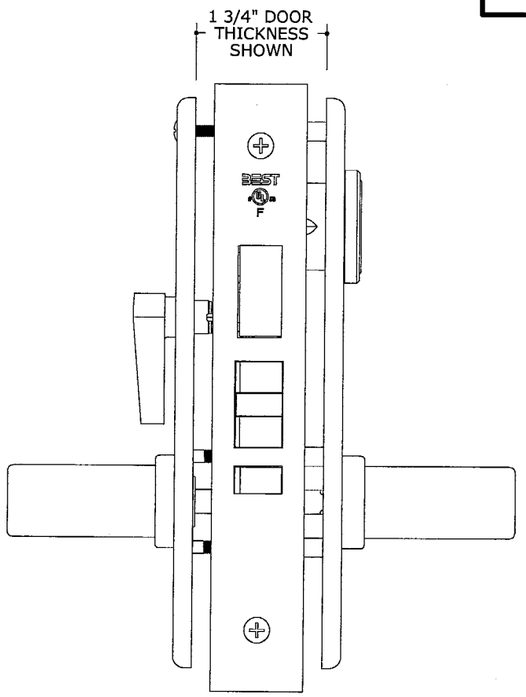

FRONT

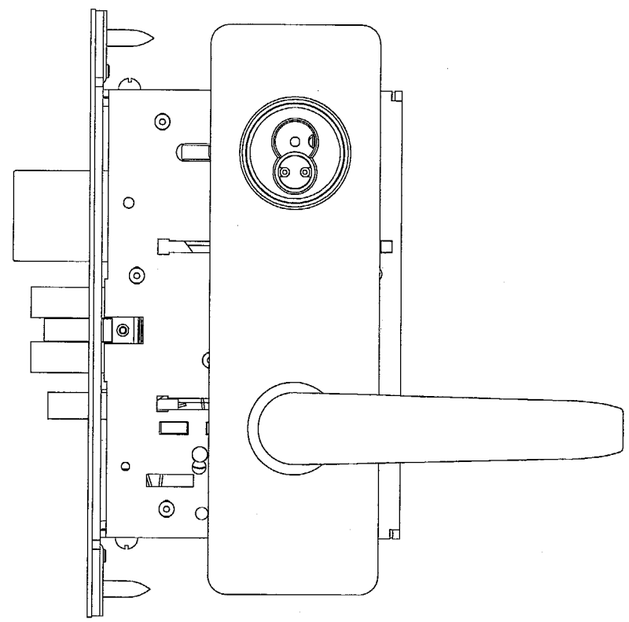

SIDE

B/2 LOCKSET ELEVATIONS
6" = 1'-0" FRONT & SIDE

Approved as complying with the Florida Building Code
Date APRIL 29, 2004
NOA# 03-0128.10
Miami Dade Product Control Division
By Ishaq J. Chand

MATERIAL & PARTS LIST

ITEM	DRAWING	DESCRIPTION	APPROXIMATE SIZE	MATERIAL	QTY REQ'D
19	C29517	LEFT HAND MORTISE 35H3S STRIKE	1.90 X 4.865 X .091	BRASS	1
	C29516	RIGHT HAND MORTISE 35HS3 STRIKE	1.90 X 4.865 X .091		
18	A18724	#12-24/#12-12 X 3/4" UNDERCUT PFHCS	#12-24 X .750	STEEL	2
17	A35462	STAMPED ESCUTCHEON AND TURN KNOB ASS'Y FOR 30O "J" TRIM	7.500 X 2.270 X .250	BRASS	1
16	A18991	S.A.T. CLAMP STUD SCREW FOR 35H/35H	#8-32 X 1.250 (SEE LIMITATIONS)	STEEL	2
15	C34413	O/S STAMPED ESCUTCHEON FOR 35H "J" TRIM	7.500 X 2.270 X .250	BRASS	1
14	B35027	O/S MOUNTING PLATE ASSEMBLY FOR 35H S.A.T.	1.912 X 1.912 X .445	STEEL	1
13	A35455	O/S #15 LEVER AND SPINDLE GROUP	4.910 X 6.189 X .945	BRASS	1
12	D34095	MORTISE FACEPLATE FOR 30H	7.995 X 1.246 X .062	BRASS	1
11	A34123	LOCKING SCREW FOR 34H/35H MORTISE CYLINDER	#10-24 X .330	STEEL	1
10	CYLINDER/CAM	INSTALL CYLINDER AND CAM PER ORDER	(INSTALL PER ORDER)	BRASS	1
9	A35028	INSIDE MOUNTING PLATE ASS'Y FOR 35H S.A.T.	1.912 X 1.912 X .445	STEEL	1
8	B35100	IE CYLINDER SLIP RING ASSEMBLY FOR 35H	Ø.485 X .205-.800	BRASS	1
7	A35454	I/S #15 LEVER GROUP	4.890 X 2.550 X .945	BRASS	1
6	A18722	FACEPLATE SCREW FOR MORTISE LOCKS	#8-32 X .250	STEEL	2
5	B34131	ESCUTCHEON RING FOR 35H	Ø1.222 X .330	BRASS	2
4	A34418	CLAMP STUD SCREW FOR 35H "HF" TRIM	#8-32 X 1.250 (SEE LIMITATIONS)	STEEL	1
3	A35466	ALIGNMENT PLATE ASSEMBLY FOR 35H "HF" TRIM	6.10 X 1.91 X .049	STEEL	1
2	D35320	35H CASE ASSEMBLY	5.892 X 4.179 X .830	STEEL	1
1	A18724	#12-24/ #12-12 X 3/4" UNDERCUT PHILLIPS FLAT HEAD COMBINATION SCREW	#12-12 X .750	STEEL	2

FRANK L. BENNARDO, P.E.
PE0046549
04/20/2004

FRANK L. BENNARDO, P.E., INC.
CONSULTING ENGINEERS
4441 NORTH DIXIE HIGHWAY
BOCA RATON, FL 33431
(561) 391-2888 FAX: (561) 391-2862
WWW.FLBENGINEERING.COM

BEST ACCESS SYSTEMS™
6161 EAST 75th STREET
INDIANAPOLIS, IN 46250
www.bestaccess.com

SERIES 35H MORTISE LOCKSET WITH DEADBOLT
COMPONENT APPROVAL - LARGE MISSILE IMPACT RESISTANT

REMARKS	DWN	CHKD	DATE
INIT ISSUE	CL	FLB	3/18/04
PROPRIETARY INFO OFF	CL	FLB	4/7/04
VALID W/ SEAL OFF	cl	flb	4/20/04
-	-	-	-
-	-	-	-

04-000-0021a
PAGE SCALE: VARIES
DESCRIPTION:
-
-

04/20/2004 - 12:03pm clangley F:\Project Data\Client Project Files_Non Recurring Client Projects\04-000-0021 Best Access Systems - 2 Lockset NOAs\04-000-021a Mo04-000-021a_1a 35H Mortise Lockset + Deadbolt (NOA).dwg