MIAMI-DADE

BUILDING CODE COMPLIANCE OFFICE (BCCO)
PRODUCT CONTROL DIVISION

MIAMI-DADE COUNTY, FLORIDA
METRO-DADE FLAGLER BUILDING
140 WEST FLAGLER STREET, SUITE 1603
MIAMI, FLORIDA 33130-1563
(305) 375-2901 FAX (305) 375-2908

NOTICE OF ACCEPTANCE (NOA)

Hurricane Buster Brothers, Inc.
8752 S.W. 129th Street
Miami, Florida 33176

SCOPE:

This NOA is being issued under the applicable rules and regulations governing the use of construction materials. The documentation submitted has been reviewed by Miami-Dade County Product Control Division and accepted by the Board of Rules and Appeals (BORA) to be used in Miami Dade County and other areas where allowed by the Authority Having Jurisdiction (AHJ).

This NOA shall not be valid after the expiration date stated below. The Miami-Dade County Product Control Division (In Miami Dade County) and/or the AHJ (in areas other than Miami Dade County) reserve the right to have this product or material tested for quality assurance purposes. If this product or material fails to perform in the accepted manner, the manufacturer will incur the expense of such testing and the AHJ may immediately revoke, modify, or suspend the use of such product or material within their jurisdiction. BORA reserves the right to revoke this acceptance, if it is determined by Miami-Dade County Product Control Division that this product or material fails to meet the requirements of the applicable building code.

This product is approved as described herein, and has been designed to comply with the High Velocity Hurricane Zone of the Florida Building Code.

DESCRIPTION: ASSA / Residential Bertha Accordion Shutter

APPROVAL DOCUMENT: Drawing No. **03-020**, titled " ASSA / Residential Bertha Accordion Shutter ", sheets 1 through 10 of 10, prepared by Tilteco, Inc., dated January 23, 2003, last revision #1 dated January 23, 2003 bearing the Miami-Dade County Product Control Revision stamp with the Notice of Acceptance number and expiration date by the Miami-Dade County Product Control Division.

MISSILE IMPACT RATING: Large and Small Missile Impact

LABELING: Each unit shall bear a permanent label with the manufacturer's name or logo, city, state and the following statement: "Miami-Dade County Product Control Approved", unless otherwise noted herein.

RENEWAL of this NOA shall be considered after a renewal application has been filed and there has been no change in the applicable building code negatively affecting the performance of this product.

TERMINATION of this NOA will occur after the expiration date or if there has been a revision or change in the materials, use, and/or manufacture of the product or process. Misuse of this NOA as an endorsement of any product, for sales, advertising or any other purposes shall automatically terminate this NOA. Failure to comply with any section of this NOA shall be cause for termination and removal of NOA.

ADVERTISEMENT: The NOA number preceded by the words Miami-Dade County, Florida, and followed by the expiration date may be displayed in advertising literature. If any portion of the NOA is displayed, then it shall be done in its entirety.

INSPECTION: A copy of this entire NOA shall be provided to the user by the manufacturer or its distributors and shall be available for inspection at the job site at the request of the Building Official.

This NOA **revises & renews NOA # 99-1227.12 &** consists of this page 1 & approval document mentioned above The submitted documentation was reviewed by **Helmy A. Makar, P.E.**

PRODUCT CONTROL ACCEPTED

NOA No 03-0130.10
Expiration Date: 02/11/2008
Approval Date: 04/10/2003

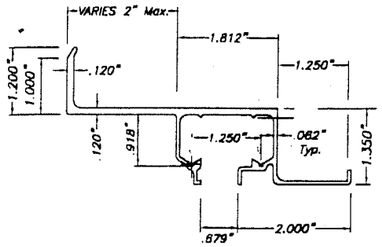

(A1) WALL HEADERS
(A1) WALL HEADERS (INVERTED USE)
SCALE: 3/8" = 1"

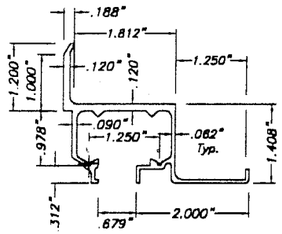

(A2) WALL HEADER
(A2) WALL HEADER (INVERTED USE)
SCALE: 3/8" = 1"

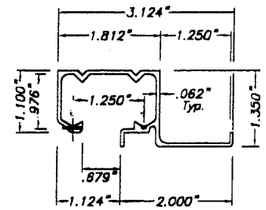

(B) CEILING HEADER
SCALE: 3/8" = 1"

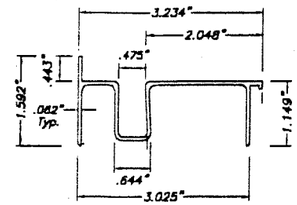

(C) SILL
SCALE: 3/8" = 1"

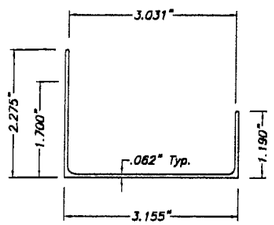

(D) SILL ADAPTER
SCALE: 3/8" = 1"

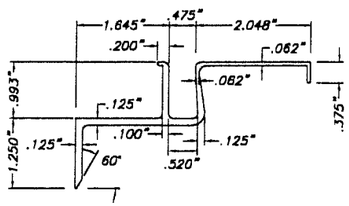

(E) BOTTOM BUILT-OUT
SCALE: 3/8" = 1"

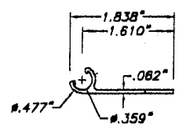

(F) FEMALE END SLAT
SCALE: 3/8" = 1"

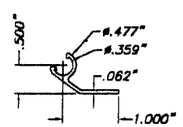

(F1) STARTER STRIP
SCALE: 3/8" = 1"

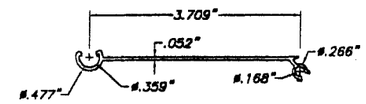

(G) RESIDENTIAL BLADE
SCALE: 3/8" = 1"

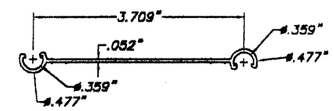

(G1) FEMALE RESIDENTIAL BLADE
SCALE: 3/8" = 1"

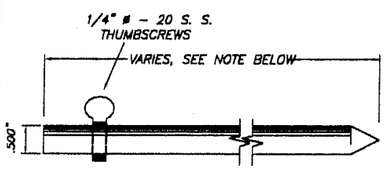

(H) LOCKING PIN
SCALE: 3/8" = 1"

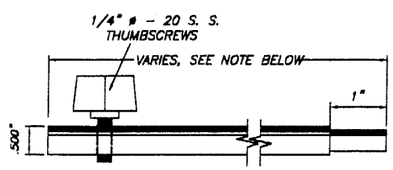

(H1) ALTERNATE LOCKING PIN
SCALE: 3/8" = 1"

6" Min. FOR UP TO 9'-0" SHUTTER BLADE LENGTHS,
& 12" Min. FOR SHUTTER BLADE LENGTHS GREATER THAN
9'-0" UP TO 12'-0".

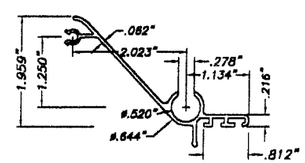

(I) MALE LOCK SLAT
SCALE: 3/8" = 1"

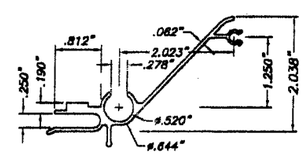

(J) FEMALE LOCK SLAT
SCALE: 3/8" = 1"

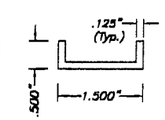

(K) LOCK CLIP
4" LONG
SCALE: 3/8" = 1"

COMPONENTS

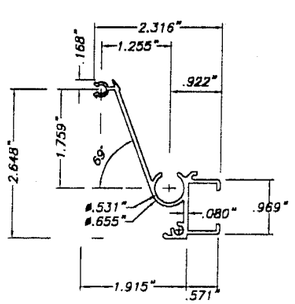

(L) MALE LOCK SLAT
SCALE: 3/8" = 1"

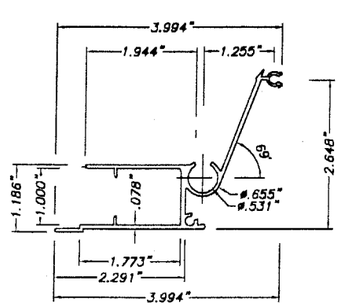

(M) FEMALE LOCK SLAT
SCALE: 3/8" = 1"

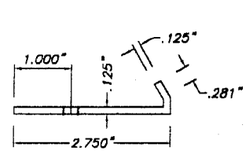

PLAN

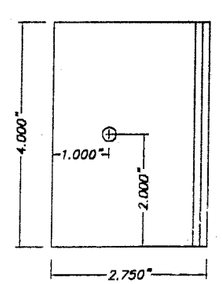

FRONT ELEVATION

(N) LOCKER
SCALE: 3/8" = 1"

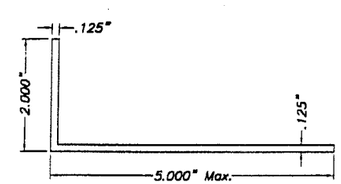

(O) ALUMINUM ANGLE
SCALE: 3/8" = 1"

GENERAL NOTES:

1. ACCORDION SHUTTER SHOWN ON THIS PRODUCT APPROVAL DOCUMENT HAS BEEN DESIGNED IN ACCORDANCE WITH THE 2001 EDITION OF THE FLORIDA BUILDING CODE.
DESIGN WIND LOADS SHALL BE DETERMINED AS PER SECTION 1619 OF THE ABOVE MENTIONED CODE, FOR A BASIC WIND SPEED OF 146 m.p.h., AND IN ACCORDANCE W/ ASCE 7-98 STANDARD.
ACCORDION SHUTTER'S ADEQUACY FOR IMPACT AND FATIGUE RESISTANCE HAS BEEN VERIFIED IN ACCORDANCE WITH SECTION 1606.1.4 OF THE ABOVE MENTIONED CODE AS PER ATL REPORT # 0902.01-98 AND PA-201, PA-202, AND PA-203.

2. STAINLESS STEEL SHEET METAL SCREWS USED AT LOUVER PIN SHALL BE # 10 x 3", 410-HT MINIMUM SERIES W/ 135.0 ksi YIELD POINT & 180 ksi TENSILE STRENGTH. SCREWS SHALL BE COATED WITH XYLAN 5000 SERIES FLUOROPOLYMER COATINGS AS MANUFACTURED BY WHITFORD Co, BOX 507 WEST CHESTER PA. 19381.

3. ALL ALUMINUM EXTRUSIONS SHALL BE 6063-T6 ALLOY.

4. ALL SCREWS TO BE STAINLESS STEEL 304 OR 316 SERIES W/ 50 ksi YIELD POINT AND 90 ksi TENSILE STRENGTH OR CORROSION RESISTANT COATED CARBON STEEL AS PER DIN 50018.

5. ALL ALUMINUM POP RIVETS TO BE 5052 ALUMINUM ALLOY WITH ALUMINUM MANDREL.

6. BOLTS TO BE 2024-T4 ALUMINUM ALLOY GALVANIZED OR STAINLESS STEEL WITH 35 ksi MINIMUM MINIMUM YIELD POINT.

7. ANCHORS TO WALL SHALL BE AS FOLLOWS: (UNLESS OTHERWISE NOTED)
(A) TO EXISTING POURED CONCRETE:
- 1/4"# TAPCON ANCHORS, AS MANUFACTURED BY I.T.W. BUILDEX OR ELCO TEXTRON, INC.
- 1/4"# ZAMAC NAILIN ANCHORS, AS MANUFACTURED BY POWERS FASTENING, INC.
- 1/4"# x 7/8" CALK-IN AS MANUFACTURED BY POWERS FASTENING.

NOTES:
A.1) MINIMUM EMBEDMENT OF TAPCON ANCHORS INTO POURED CONCRETE IS 1 3/4". MINIMUM EMBEDMENT OF ZAMAC NAILIN IS 1 3/8".
A.2) 1/4"# x 7/8" CALK-IN ANCHORS SHALL BE ENTIRELY EMBEDDED INTO THE POURED CONCRETE. NO EMBEDMENT INTO STUCCO SHALL BE PERMITTED. 1/4" #-20 SCREWS USED SHALL BE 1 1/2" LONG MINIMUM SHOULD STUCCO EXIST.
A.3) IN CASE THAT PRECAST STONE, PRECAST CONCRETE PANELS, OR PAVERS BE FOUND ON THE EXISTING WALL OR FLOOR, ANCHORS SHALL BE LONG ENOUGH TO REACH THE MAIN STRUCTURE BEHIND SUCH PANELS. ANCHORAGE SHALL BE AS INDICATED ON NOTES A.1 & A.2 ABOVE.

(B) TO EXISTING CONCRETE BLOCK WALL:
- 1/4"# TAPCON ANCHORS AS MANUFACTURED BY I.T.W. BUILDEX OR ELCO TEXTRON, INC.
- 1/4"# ZAMAC NAILIN ANCHORS AS MANUFACTURED POWERS FASTENING, INC.
- 1/4"# x 7/8" CALK-IN AS MANUFACTURED BY POWERS FASTENING, INC.

NOTES:
B.1) MINIMUM EMBEDMENT OF TAPCON ANCHORS, AND ZAMAC NAILIN ANCHORS INTO THE CONCRETE BLOCK UNIT SHALL BE 1 1/4".
B.2) 1/4"# x 7/8" CALK-IN ANCHORS SHALL BE ENTIRELY EMBEDDED INTO THE CONCRETE BLOCK UNIT. NO EMBEDMENT INTO STUCCO SHALL BE PERMITTED. 1/4" #-20 SCREWS USED SHALL BE 1 1/2" LONG MINIMUM SHOULD STUCCO EXIST.
B.3) IN CASE THAT PRECAST STONE OR PRECAST CONCRETE PANELS BE FOUND ON THE EXISTING WALL, ANCHORS SHALL BE LONG ENOUGH TO REACH THE MAIN STRUCTURE BEHIND SUCH PANELS. ANCHORAGE SHALL BE 1 1/4" MINIMUM FOR ANCHORS MENTIONED IN B.1.), & 7/8" FOR ANCHORS MENTIONED IN B.2.).

(C) ANCHORS SHALL BE INSTALLED FOLLOWING ALL OF THE RECOMMENDATIONS AND SPECIFICATIONS OF THE ANCHOR'S MANUFACTURER.

8. BLADE (G), AND THE KNUCKLES FOR CENTERMATES (J), (G), (L) & (M), & THE STARTERS (F) & (F1) ARE UNDER THE PATENT OF EASTERN METALS.

9. IT SHALL BE THE RESPONSIBILITY OF THE CONTRACTOR TO VERIFY THE SOUNDNESS OF THE STRUCTURE WHERE SHUTTER IS TO BE ATTACHED TO INSURE PROPER ANCHORAGE.

10. EACH UNIT MUST BEAR A PERMANENT LABEL IN A VISIBLE PLACE WITH A WARNING NOTE INSTRUCTING THE TENANT OR HOME OWNER THAT ALL LOCKING PINS, AS WELL AS BOTH LOCKERS MUST BE PROPERLY INSTALLED & BOLTED DURING PERIODS OF HURRICANE WARNING.

11. SHUTTER'S MANUFACTURER STAMP SHALL BE PLACED ON THE EXPOSED SURFACE OF THE FEMALE LOCK SLAT (COMPONENT) (J) OR (L))
ONE LABEL SHALL BE PLACED FOR EVERY OPENING, LABEL SHALL READ AS FOLLOWS:
HURRICANE BUSTER BROTHERS, INC.
MIAMI, FL.
MIAMI-DADE COUNTY PRODUCT CONTROL APPROVED.

12. (a) THIS PRODUCT APPROVAL DOCUMENT (P.A.D.) PREPARED BY THIS ENGINEER IS GENERIC AND DOES NOT PROVIDE INFORMATION FOR A SITE SPECIFIC PROJECT; i.e. WHERE THE SITE CONDITIONS DEVIATE FROM THE P.A.D.

(b) CONTRACTOR TO BE RESPONSIBLE FOR THE SELECTION, PURCHASE AND INSTALLATION OF THIS PRODUCT BASED ON THIS PRODUCT APPROVAL PROVIDED HE/SHE DOES NOT DEVIATE FROM THE CONDITIONS DETAILED ON THIS DOCUMENT.

(c) THIS PRODUCT APPROVAL DOCUMENT WILL BE CONSIDERED INVALID IF MODIFIED.

(d) SITE SPECIFIC PROJECTS SHALL BE PREPARED BY A FLORIDA REGISTERED ENGINEER OR ARCHITECT WHICH WILL BECOME THE PROFESSIONAL OF RECORD (P.O.R.) FOR THE PROJECT AND WHO WILL BE RESPONSIBLE FOR THE PROPER USE OF THE P.A.D. PROFESSIONAL OF RECORD, ACTING AS DELEGATED ENGINEER TO THE P.A.D. ENGINEER, SHALL SUBMIT TO THIS LATTER THE SITE SPECIFIC DRAWINGS FOR REVIEW.

(e) THIS P.A.D. SHALL BEAR THE DATE AND ORIGINAL SEAL AND SIGNATURE OF THE PROFESSIONAL ENGINEER THAT PREPARED IT.

PRODUCT REVISED
as complying with the Florida Buiding Code
Acceptance No 03-0130.10
Expiration Date 02/11/2008
By Helena A. Molina
Miami Dade Product Control Division

F.B.C.(H.V.H.Z.)/MIAMI-DADE COUNTY

JAN 23 2003

TILTECO INC.
TILLIT TESTING & ENGINEERING COMPANY
6595 N.W. 36th. St., Ste. 217, VIRGINIA GARDENS, FLORIDA 33166
Phone : (305)871-1530 . Fax : (305)871-1531
EB-0006719
WALTER A. TILLIT Jr., P. E.
FLORIDA Lic. # 44167

ASSA / RESIDENTIAL BERTHA ACCORDION SHUTTER

HURRICANE BUSTER BROTHERS, INC.
(ASSA # 155)
8752 S.W. 129th ST.
MIAMI, FL 33176

REV. No	DESCRIPTION	DATE	REV. No	DESCRIPTION	DATE
1	OLD DWG 99-352	1/23/03	3	-	-
2	-	-	4	-	-

AS SHOWN
SCALE

1/23/03
DATE

03-020
DRAWING No

SHEET 1 OF 10

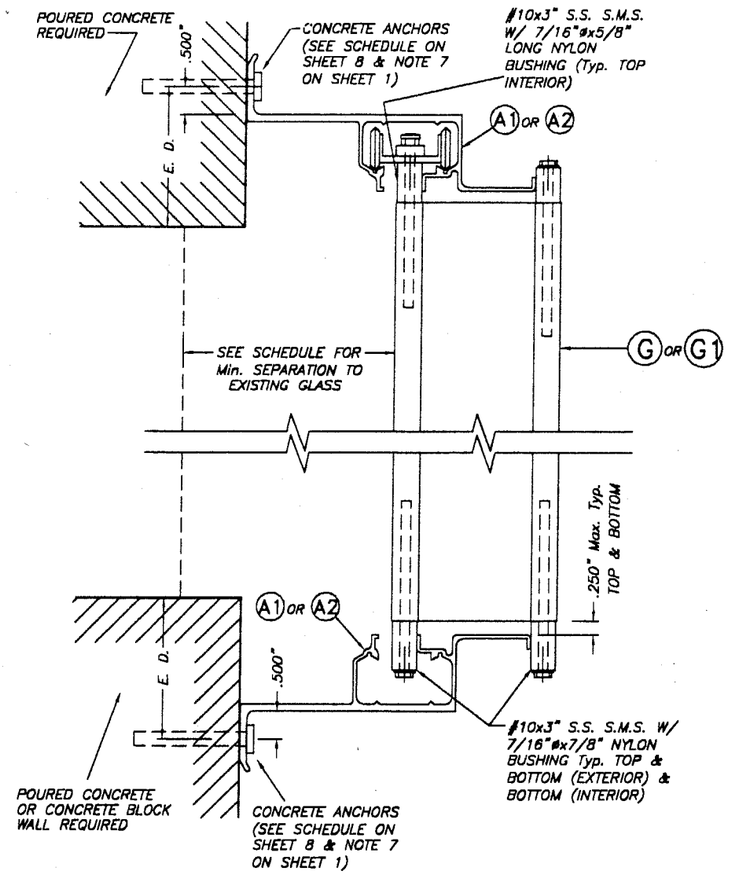

WALL MOUNTING INSTALLATION – SECTION A

SCALE: 3/8" = 1"

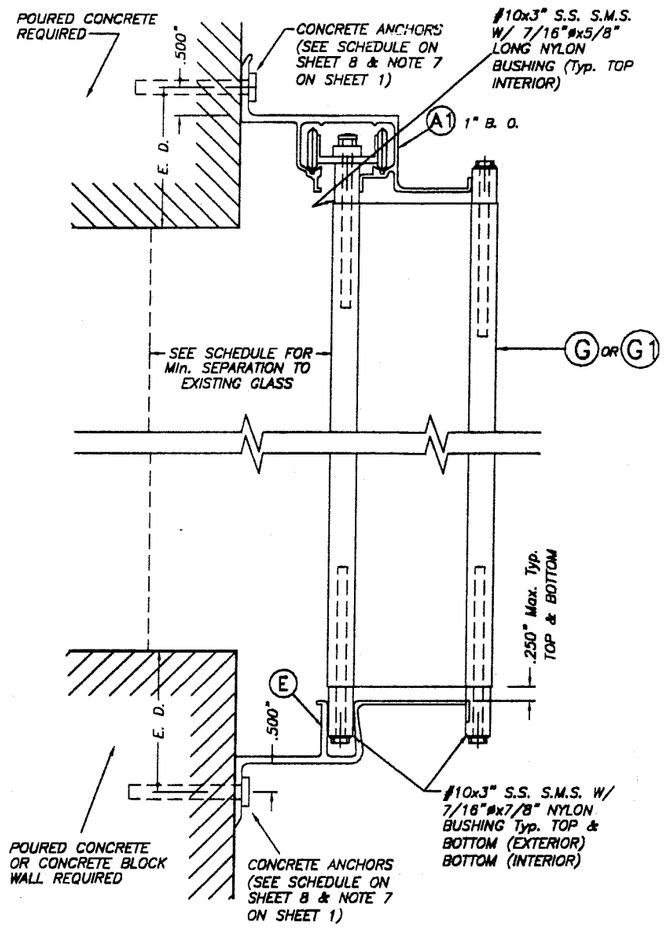

WALL MOUNTING INSTALLATION – SECTION A1

SCALE: 3/8" = 1"

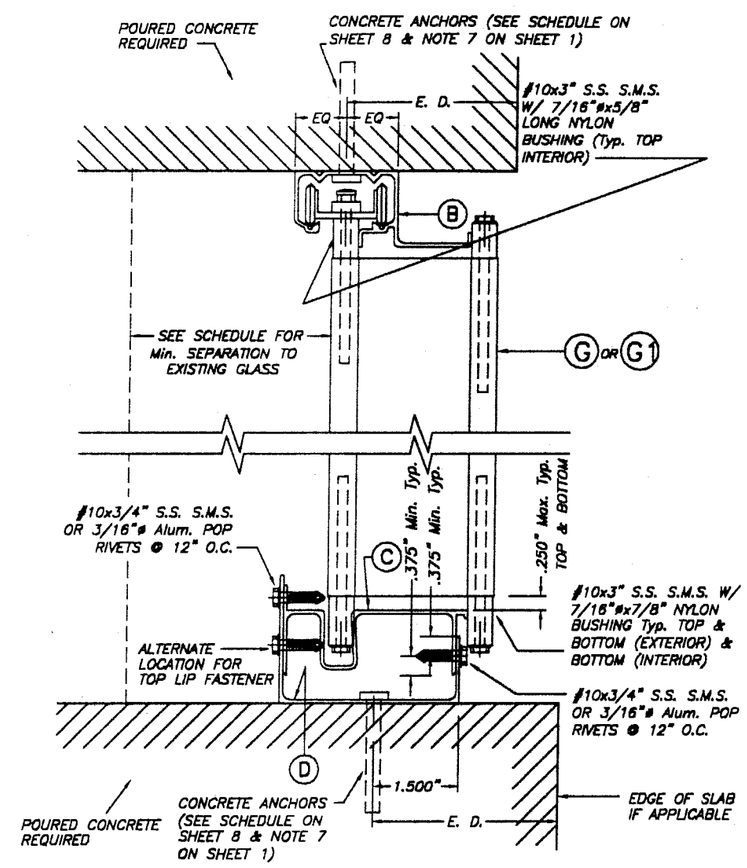

CEILING & FLOOR MOUNT. INSTALLAT. – SECTION B

SCALE: 3/8" = 1"

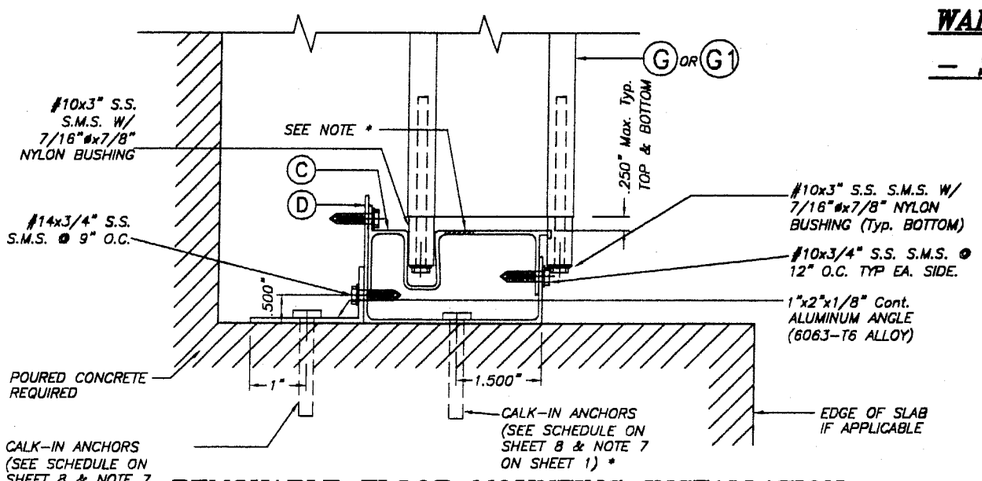

REMOVABLE FLOOR MOUNTING INSTALLATION – SECTION B1

SCALE: 3/8" = 1"

* ALTERNATIVELY TO 1" x 2" Alum. ANGLE W/ ANCHOR, DRILL HOLE AT Ⓒ TO INSTALL CALK-IN AT Ⓓ. COVER HOLE WITH NYLON CAPS.

E. D. = EDGE DISTANCE (SEE SCHEDULE ON SHEET 8 OF 10)

NOTE FOR COMBINATION OF SECTIONS :

WALL/FLOOR/CEILING MOUNTING SECTIONS CAN BE COMBINED IN ANY WAY TO SUIT ANY INSTALLATION.

PRODUCT REVISED
as complying with the Florida Building Code
Acceptance No 03-0130.10
Expiration Date 02/11/2008
By Helena A. Malan
Miami Dade Product Control Division

F.B.C.(H.V.H.Z.)/MIAMI-DADE COUNTY

JAN 23 2003

TILTECO INC.
TILLIT TESTING & ENGINEERING COMPANY
6585 N.W. 36th. St., Ste. 217, VIRGINIA GARDENS, FLORIDA 33166
Phone : (305)871-1530 . Fax : (305)871-1531
EB-0006719
WALTER A. TILLIT Jr., P. E.
FLORIDA Lic. # 44167

ASSA / RESIDENTIAL BERTHA ACCORDION SHUTTER

HURRICANE BUSTER BROTHERS, INC.
(ASSA # 155)
8752 S.W. 129th ST.
MIAMI, FL 33176

AS SHOWN SCALE

1/23/03 DATE

03-020 DRAWING No

REV. No	DESCRIPTION	DATE	REV. No	DESCRIPTION	DATE
1	OLD DWG 99-352	1/23/03	3	–	–
2	–	–	4	–	–

SHEET 2 OF 10

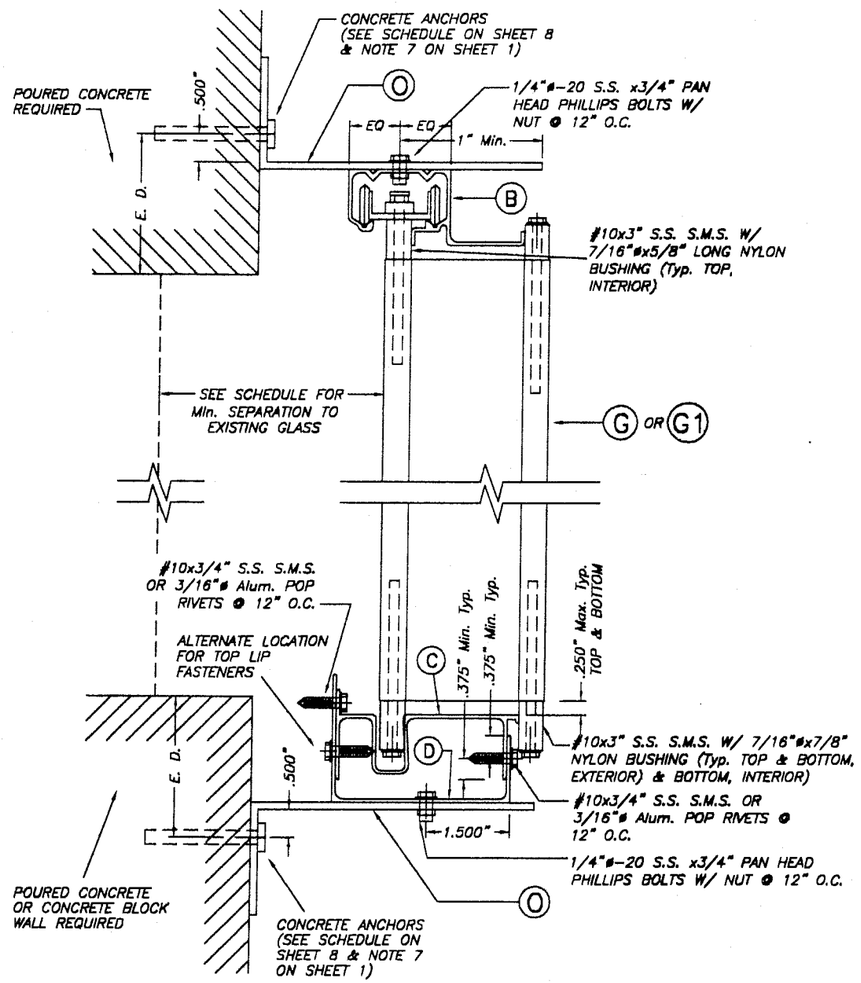

WALL MOUNTING INSTALLATION (BUILD-OUT) – SECTION C

SCALE : 3/8" = 1'

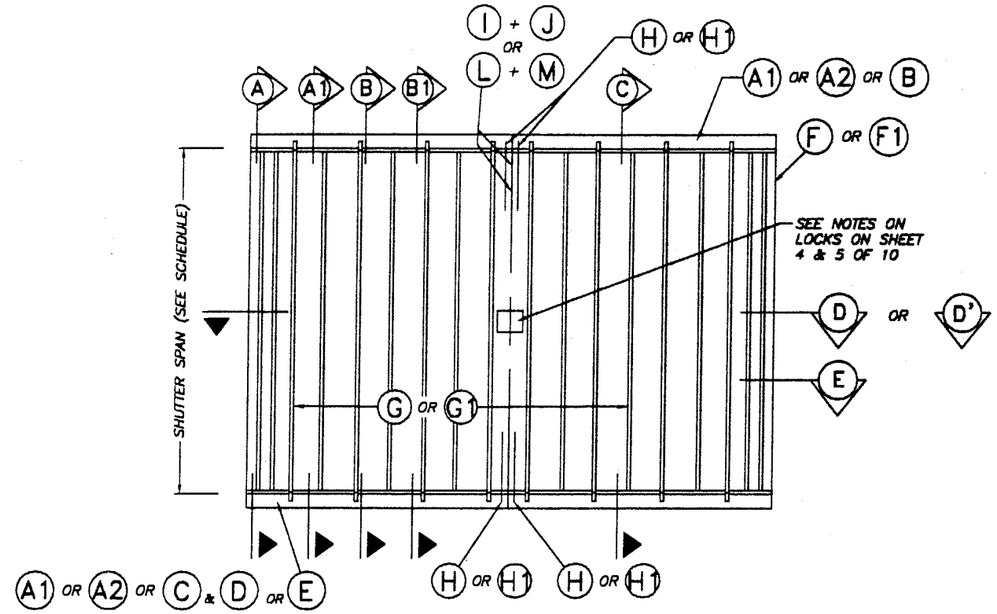

TYPICAL ELEVATION N. T. S.

E. D. = EDGE DISTANCE (SEE SCHEDULE ON SHEET 8 OF 10)

NOTE FOR COMBINATION OF SECTIONS :

WALL/FLOOR/CEILING MOUNTING SECTIONS CAN BE COMBINED IN ANY WAY TO SUIT ANY INSTALLATION.

PRODUCT REVISED
as complying with the Florida Buiding Code
Acceptance No 03-0130.10
Expiration Date 02/11/2008
By Helmy A. Moler
Miami Dade Product Control Division

F.B.C.(H.V.H.Z.)/MIAMI-DADE COUNTY

JAN 23 2003

TILTECO INC.
TILLIT TESTING & ENGINEERING COMPANY
8395 N.W. 36th. St., Ste. 217, VIRGINIA GARDENS, FLORIDA 33166
Phone : (305)871-1530 . Fax : (305)871-1531
EB-0006719
WALTER A. TILLIT Jr., P. E.
FLORIDA Lic. # 44167

ASSA / RESIDENTIAL BERTHA ACCORDION SHUTTER

HURRICANE BUSTER BROTHERS, INC.
(ASSA # 155)
8752 S.W. 129th ST.
MIAMI, FL 33176

REV. No	DESCRIPTION	DATE	REV. No	DESCRIPTION	DATE
1	OLD DWG 99-352	1/23/03	3	–	–
2	–	–	4	–	–

AS SHOWN SCALE

1/23/03 DATE

03-020 DRAWING No

SHEET 3 OF 10

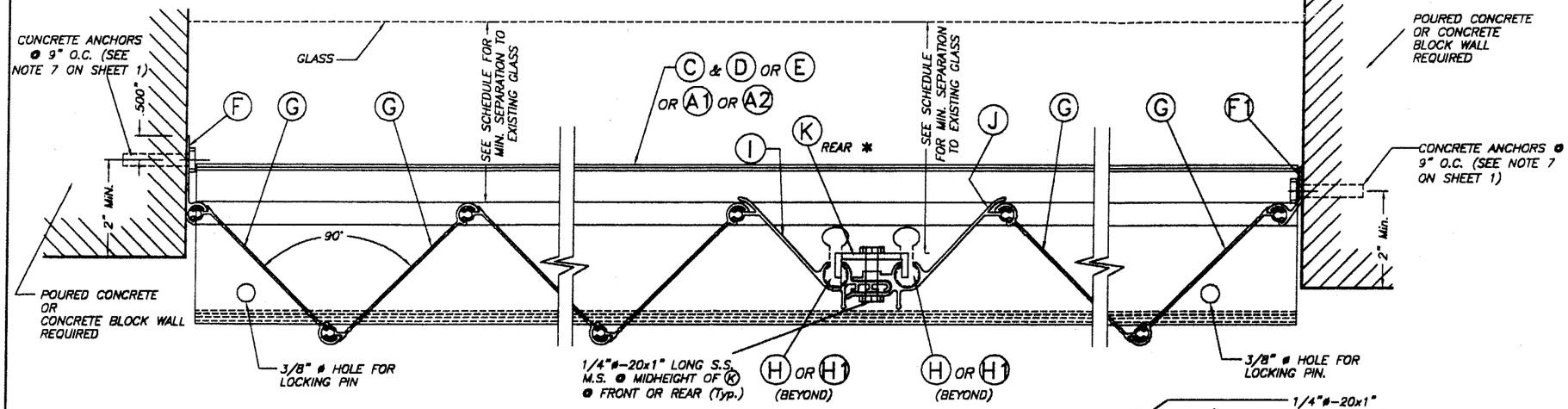

SECTION D

SCALE: 3/8" = 1"

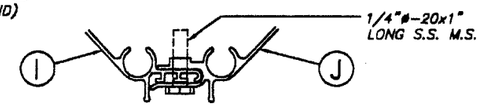

NOTES ON LOCKS: APPLICABLE TO LOCK DETAILS SHOWN ON THIS SHEET.

* CENTERMATES I & J SHALL ALWAYS BE LOCKED BY USING LOCK CLIP K INSTALLED FROM THE INSIDE OF SHUTTER W/ 1/4" ø-20 x 1" S. S. SIDEWALK BOLT AS SHOWN ON SECTIONS D & E. BOLT SHALL PENETRATE K LOCK CLIP, AS WELL AS I & J ENTIRELY. LOCK CLIP K 1/2" FLANGES SHALL FIT ENTIRELY INTO I & J LOCKING PIN GROOVES BEFORE SIDEWALK BOLT IS TIGHTENED.

** ALTERNATIVELY TO USING K LOCK CLIP, CENTERMATES I & J SHALL ALWAYS BE LOCKED BY INSTALLING A 1/4" ø-20 x 1" S. S. SIDEWALK BOLT DIRECTLY THRU BOTH CENTERMATES. FOR THIS PURPOSE, I & J CENTERMATES SHALL BE PRE-DRILLED AT THE BOLT LOCATION AS WELL AS TAPPED THRU IN ORDER TO ACCEPT THE 1/4" ø-20 SIDEWALK BOLT. THIS BOLT MAY BE INSTALLED FROM EITHER THE FRONT OR REAR OF SHUTTER.

SECTIONS D, D' & E W/O K **

SCALE: 3/8" = 1"

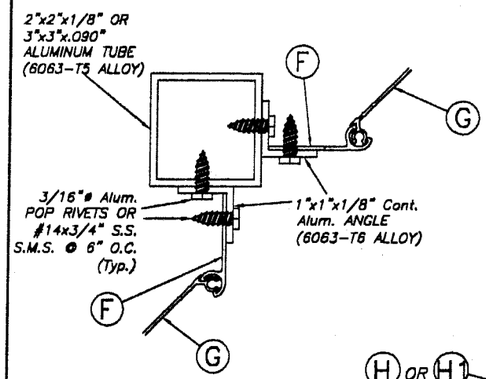

CASE 1

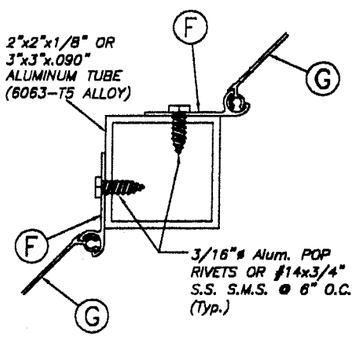

CASE 3

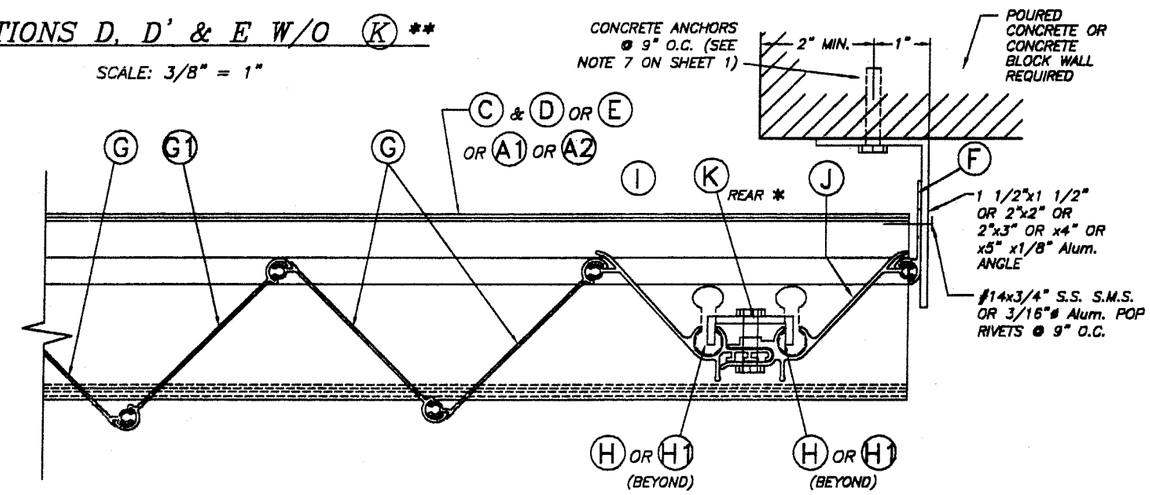

SECTION D' : ONE SIDED SHUTTER END CONNECTION DETAIL

SCALE: 3/8" = 1"

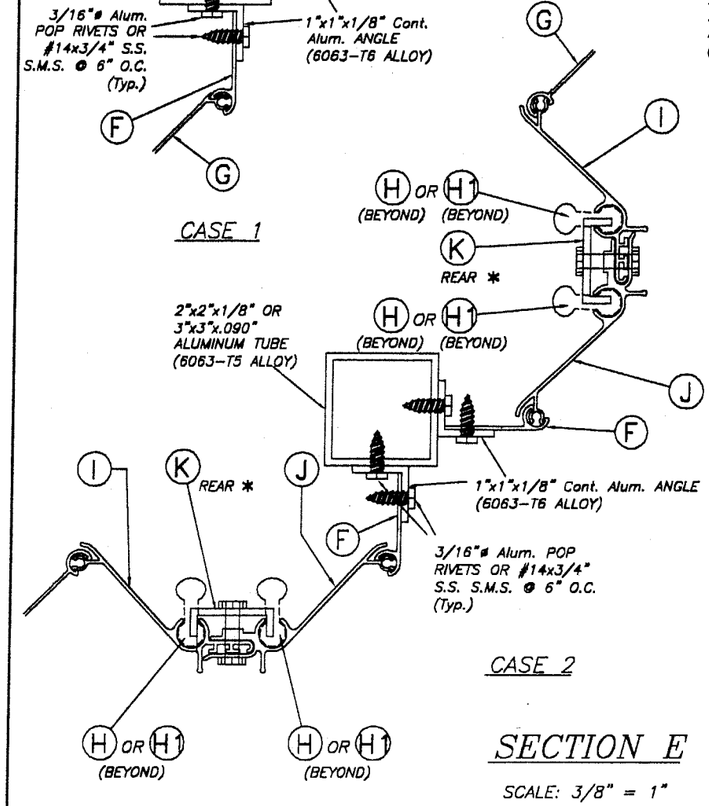

CASE 2

SECTION E

SCALE: 3/8" = 1"

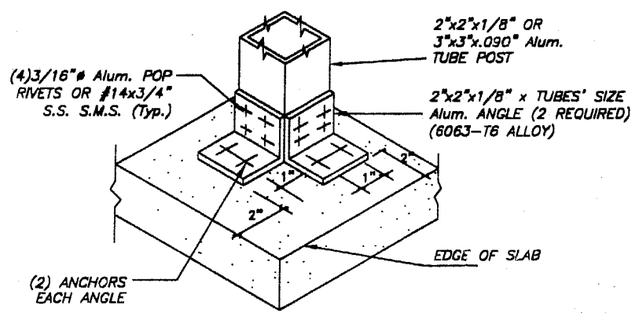

ISOMETRIC (CORNER POST) (Typ. AT TOP & BOTTOM SLABS)

PRODUCT REVISED
as complying with the Florida Buiding Code
Acceptance No 03-0130.10
Expiration Date 02/11/2008
By Helena A. Molina
Miami Dade Product Control Division

F.B.C.(H.V.H.Z.)/MIAMI-DADE COUNTY

JAN 23 2003

TILTECO INC.
TILLIT TESTING & ENGINEERING COMPANY
4595 N.W. 36th. St., Ste. 217, VIRGINIA GARDENS, FLORIDA 33166
Phone : (305)871-1530 . Fax : (305)871-1531
EB-0006719
WALTER A. TILLIT Jr., P. E.
FLORIDA Lic. # 44167

ASSA / RESIDENTIAL BERTHA ACCORDION SHUTTER

HURRICANE BUSTER BROTHERS, INC.
(ASSA # 155)
8752 S.W. 129th ST.
MIAMI, FL 33176

REV. No	DESCRIPTION	DATE	REV. No	DESCRIPTION	DATE
1	OLD DWG 99-352	1/23/03	3	-	-
2	-	-	4	-	-

AS SHOWN SCALE
1/23/03 DATE
03-020 DRAWING No
SHEET 4 OF 10

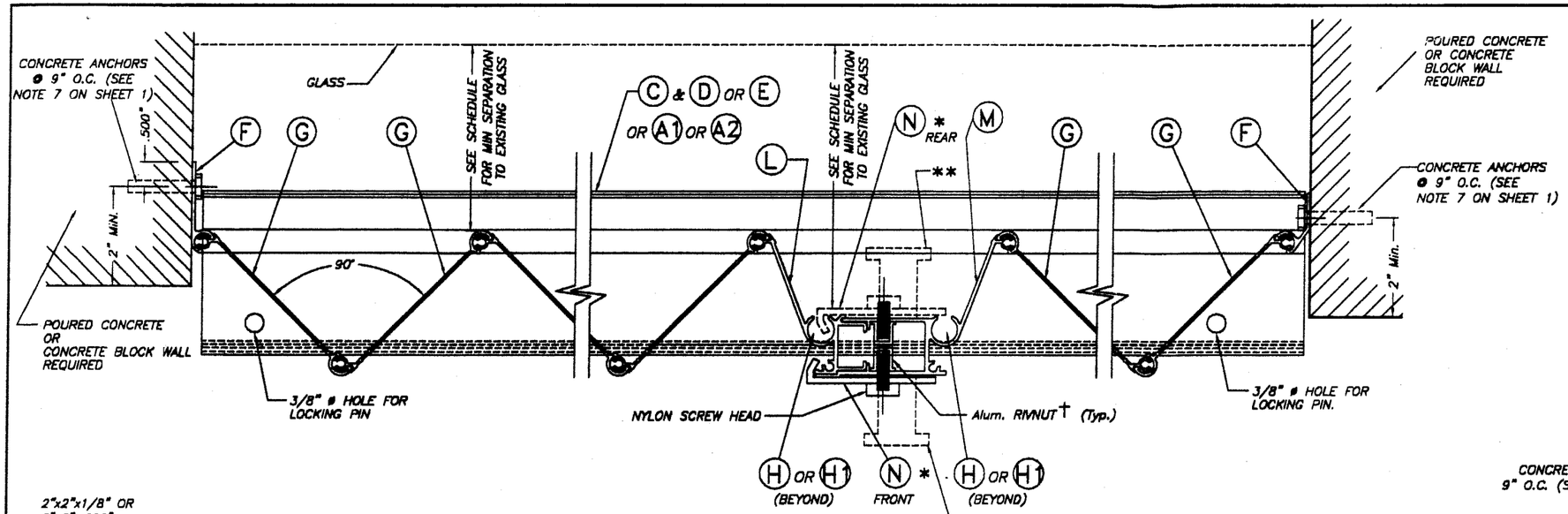

SECTION D

SCALE: 3/8" = 1"

NOTES ON LOCKS : APPLICABLE TO LOCK DETAILS SHOWN ON THIS SHEET.

* LOCKER (N) SHALL ALWAYS BE USED FOR ANY SPAN AND INSTALLATIONS AT ANY ELEVATION.
LOCKER (N) MAY BE USED AS AN INSIDE OR OUTSIDE LOCKER IF ATTACHED TO (L) & (M) W/ 1/4" ø–20 x 1" LONG S. S. THREADED BOLT W/ 1/4" ø–20 x 5/8" INTERNALLY THREADED ALUMINUM RIVNUT. SEE INSTALLATION DETAIL ON THIS SHEET.

** FOR INSTALLATIONS AT ANY ELEVATION OF BUILDING AND IN ADDITION TO (N) LOCKERS, A REGULAR T LOCK MAY BE USED FOR SECURITY PURPOSES AT ANY DESIRED LOCATION OF CENTERMATE (INSIDE OR OUTSIDE).
WHEN USED INSIDE, MINIMUM SEPARATION TO GLASS SHALL ALSO BE VERIFIED FROM THE TIP OF SUCH T LOCK OR FROM THE OTHER SHUTTER COMPONENTS SHOWN ON SECTION D (WHICHEVER IS MORE CRITICAL).

†: SERIES 9444 ALUMINUM (2024–T3 ALLOY) LARGE FLANGE THIN SHEET NUTSERT, PART # 0820, AS MANUFACTURED BY AVDEL CHERRY TEXTORN, PARSIPPENY, NEW JERSEY 07054 OR EQUAL.

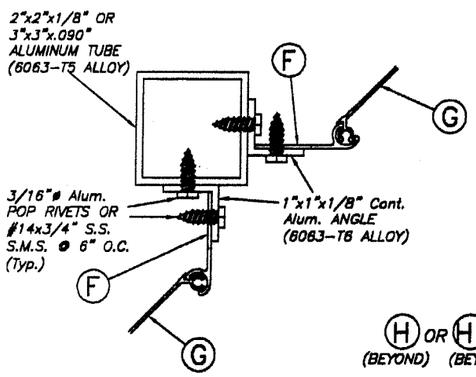

CASE 1

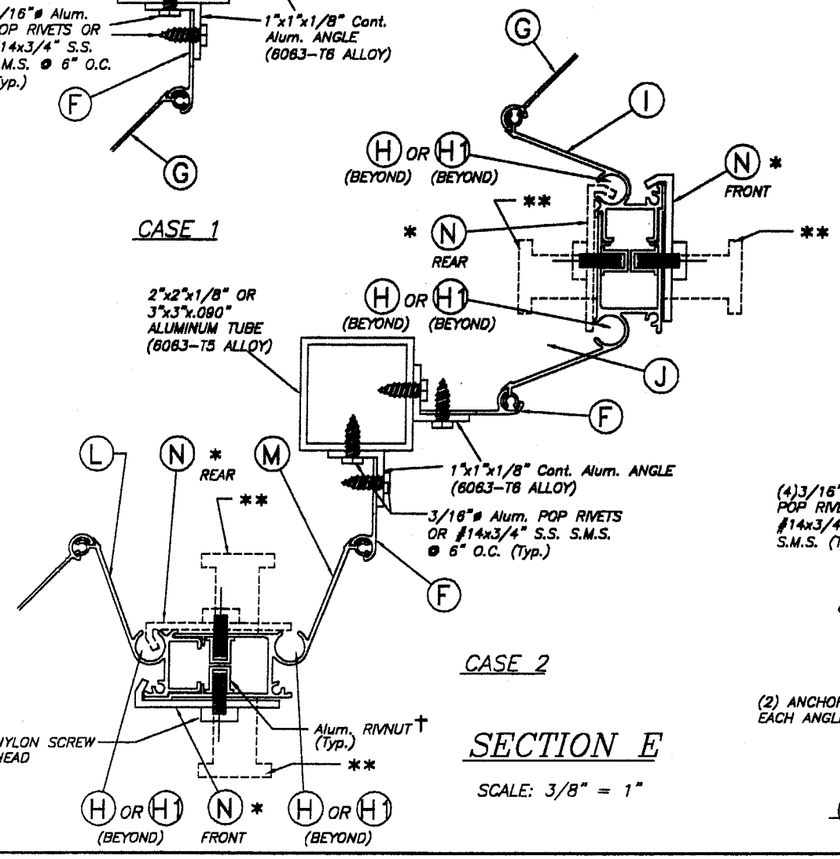

CASE 2

SECTION E

SCALE: 3/8" = 1"

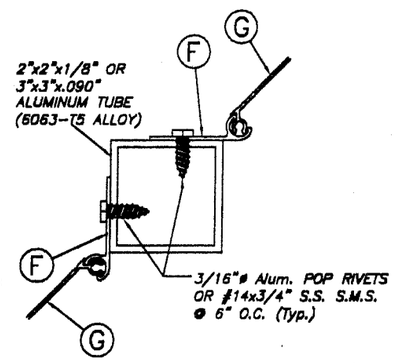

CASE 3

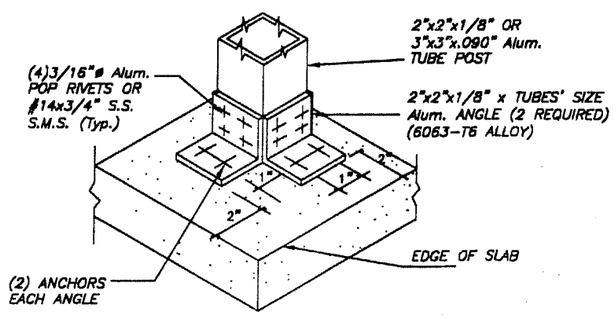

ISOMETRIC (CORNER POST) (Typ. AT TOP & BOTTOM SLABS)

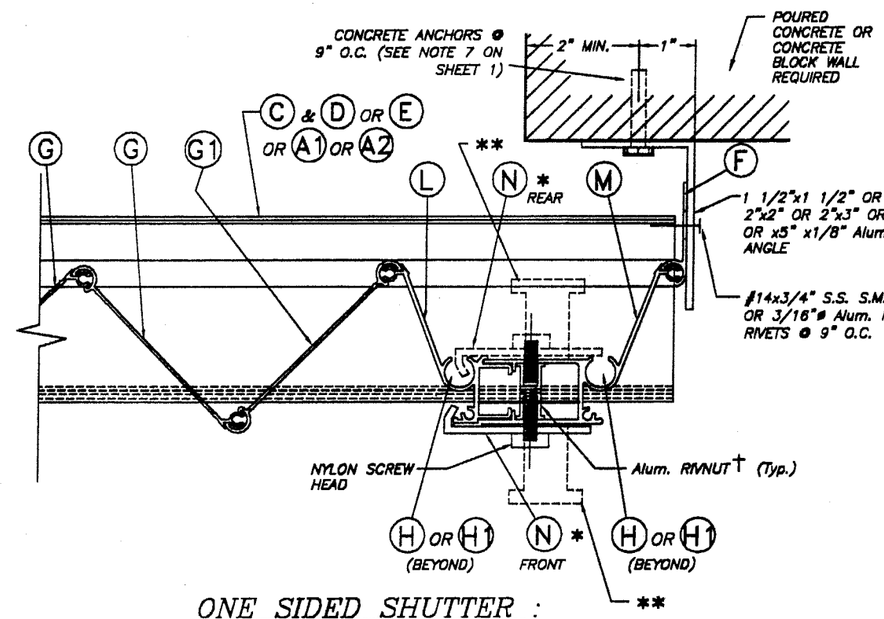

ONE SIDED SHUTTER : END CONNECTION DETAIL

SCALE: 3/8" = 1"

PRODUCT REVISED
as complying with the Florida Building Code
Acceptance No 03-0130.10
Expiration Date 02/11/2008
By Helmy A. Malek
Miami Dade Product Control Division

F.B.C.(H.V.H.Z.)/MIAMI–DADE COUNTY

JAN 23 2003

TILTECO INC.
TILLIT TESTING & ENGINEERING COMPANY
8595 N.W. 38th. St., Ste. 217, VIRGINIA GARDENS, FLORIDA 33166
Phone : (305)871-1530 . Fax : (305)871-1531
EB-0006719
WALTER A. TILLIT Jr., P. E.
FLORIDA Lic. # 44167

ASSA / RESIDENTIAL BERTHA ACCORDION SHUTTER

HURRICANE BUSTER BROTHERS, INC.
(ASSA # 155)
8752 S.W. 129th ST.
MIAMI, FL 33176

REV. No	DESCRIPTION	DATE	REV. No	DESCRIPTION	DATE
1	OLD DWG 99–352	1/23/03	3	–	–
2	–	–	4	–	–

AS SHOWN SCALE
1/23/03 DATE
03–020 DRAWING No
SHEET 5 OF 10

MAXIMUM DESIGN PRESSURE RATING "W" (p.s.f.) AND CORRESPONDING MAXIMUM SPAN "L" SCHEDULE.

(VALID FOR SECTIONS A, A1 & C ON SHEET 2 & 3 OF 10).

NOTE: DESIGN PRESSURE RATING CORRESPONDS ONLY TO NEGATIVE PRESSURE (SUCTION) LOADS, IN ACCORDANCE WITH ASCE 7-98 CRITERIA FOR A GIVEN OPENING.
IF NEGATIVE PRESSURE VALUES COMPLY WITH THE REQUIRED PRESSURE FOR THE OPENING, THE POSITIVE PRESSURE WILL AUTOMATICALLY QUALIFY AND NEED NOT TO BE CHECKED.

MAXIMUM DESIGN LOAD "W" (p.s.f.)	MAXIMUM SHUTTER SPAN "L" (ft.)	MINIMUM SEPARATION TO GLASS (in.)	
		*	**
40.0	12'-1"	3 7/8"	3"
42.5	11'-11"	3 7/8"	3"
45.0	11'-9"	3 7/8"	3"
47.5	11'-7"	3 7/8"	3"
50.0	11'-5"	3 7/8"	3"
52.5	11'-1"	3 7/8"	3"
55.0	10'-10"	3 7/8"	3"
57.5	10'-7"	3 7/8"	3"
60.0	10'-5"	3 7/8"	3"
62.5	10'-2"	3 7/8"	3"
65.0	10'-0"	3 7/8"	3"
67.5	9'-10"	3 7/8"	3"
70.0	9'-7"	3 7/8"	3"
72.5	9'-5"	3 7/8"	3"
75.0	9'-4"	3 7/8"	3"
77.5	9'-2"	3 7/8"	3"
80.0	9'-0"	3 7/8"	3"
82.5	8'-9"	3 7/8"	3"

MAXIMUM DESIGN LOAD "W" (p.s.f.)	MAXIMUM SHUTTER SPAN "L" (ft.)	MINIMUM SEPARATION TO GLASS (in.)	
		*	**
85.0	8'-6"	3 7/8"	3"
87.5	8'-3"	3 7/8"	3"
90.0	8'-0"	3 3/8"	3"
92.5	7'-9"	3 3/8"	3"
95.0	7'-7"	3 3/8"	3"
97.5	7'-5"	3 3/8"	3"
100.0	7'-2"	3 3/8"	3"
102.5	7'-0"	3 3/8"	3"
105.0	6'-10"	3 3/8"	3"
107.5	6'-8"	3 3/8"	3"
110.0	6'-7"	3 3/8"	3"
112.5	6'-5"	3 3/8"	3"
115.0	6'-3"	3 3/8"	3"
117.5	6'-2"	3 3/8"	3"
120.0	6'-0"	3 3/8"	3"
122.5	5'-11"	3 3/8"	3"
125.0	5'-9"	3 3/8"	3"
127.5	5'-8"	3 3/8"	3"
130.0	5'-6"	3 3/8"	3"
132.5	5'-5"	3 3/8"	3"
135.0	5'-4"	3 3/8"	3"
137.5	5'-3"	3 3/8"	3"

MAXIMUM DESIGN LOAD "W" (p.s.f.)	MAXIMUM SHUTTER SPAN "L" (ft.)	MINIMUM SEPARATION TO GLASS (in.)	
		*	**
140.0	5'-2"	3 3/8"	3"
142.5	5'-1"	3 3/8"	3"
145.0	5'-0"	3 3/8"	3"
147.5	4'-11"	3 3/8"	3"
150.0	4'-10"	3 3/8"	3"
152.5	4'-9"	3 3/8"	3"
155.0	4'-8"	3 3/8"	3"
157.5	4'-7"	3 3/8"	3"
160.0	4'-6"	3 3/8"	3"
162.5	4'-5"	3 3/8"	3"
165.0	4'-4"	3 3/8"	3"
167.5	4'-4"	3 3/8"	3"
170.0	4'-3"	3 3/8"	3"
172.5	4'-2"	3 3/8"	3"
175.0	4'-1"	3 3/8"	3"
177.5	4'-1"	3 3/8"	3"
180.0	4'-0"	3 3/8"	3"

TABLE 1:

MINIMUM SEPARATION BETWEEN GLASS AND SHUTTER FOR A GIVEN SHUTTER SPAN "L" FOR SHUTTERS INSTALLED WITHIN THE FIRST 30'-0" ABOVE GRADE OF A GIVEN BUILDING. 30'-0" ELEVATION SHALL BE MEASURED AT BOTTOM OF SHUTTER SEPARATION TO BE MEASURED AS INDICATED ON SECTION D, SHEET 4 OF 10.

SHUTTER SPAN "L" (ft.)	MINIMUM SEPARATION
LESS OR EQUAL THAN 8'-0"	3 3/8"
>8'-0" TO 12'-0"	3 7/8"

PRODUCT REVISED
as complying with the Florida Buiding Code
Acceptance No 03-0130.10
Expiration Date 02/11/2008
By Helena A. Molina
Miami Dade Product Control Division

* FOR SHUTTERS INSTALLED WITHING THE FIRST 30'-0" ELEVATION OF BUILDING. SEE TABLE 1 FOR MINIMUM SEPARATION TO GLASS FOR SPANS SHORTER THAN THE MAXIMUM ALLOWED SHOWN ON SCHEDULE.

** FOR SHUTTERS INSTALLED ABOVE 30'-0" ELEVATION OF BUILDING, MEASURED AT BOTTOM OF SHUTTER

JAN 23 2003

F.B.C.(H.V.H.Z.)/MIAMI-DADE COUNTY

TILLECO INC.
TILLIT TESTING & ENGINEERING COMPANY
8595 N.W. 38th. St., Ste. 217, VIRGINIA GARDENS, FLORIDA 33166
Phone : (305)871-1530 . Fax : (305)871-1531
EB-0006719
WALTER A. TILLIT Jr., P. E.
FLORIDA Lic. # 44167

ASSA / RESIDENTIAL BERTHA ACCORDION SHUTTER

HURRICANE BUSTER BROTHERS, INC.
(ASSA # 155)
8752 S.W. 129th ST.
MIAMI, FL 33176

REV. No	DESCRIPTION	DATE	REV. No	DESCRIPTION	DATE
1	OLD DWG 99-352	1/23/03	3	–	–
2	–	–	4	–	–

AS SHOWN SCALE
1/23/03 DATE
03-020 DRAWING No
SHEET 6 OF 10

MAXIMUM DESIGN PRESSURE RATING "W" (p.s.f.) AND CORRESPONDING MAXIMUM SPAN "L" SCHEDULE.

(VALID FOR SECTION B & B1 ON SHEET 2 OF 10).

NOTE: DESIGN PRESSURE RATING CORRESPONDS ONLY TO NEGATIVE PRESSURE (SUCTION) LOADS, IN ACCORDANCE WITH ASCE 7-98 CRITERIA FOR A GIVEN OPENING.
IF NEGATIVE PRESSURE VALUES COMPLY WITH THE REQUIRED PRESSURE FOR THE OPENING, THE POSITIVE PRESSURE WILL AUTOMATICALLY QUALIFY AND NEED NOT TO BE CHECKED.

MAXIMUM DESIGN LOAD "W" (p.s.f.)	MAXIMUM SHUTTER SPAN "L" (ft.)	MINIMUM SEPARATION TO GLASS (in.)	
		*	**
40.0	12'-0"	3 7/8"	3"
42.5	11'-11"	3 7/8"	3"
45.0	11'-9"	3 7/8"	3"
47.5	11'-7"	3 7/8"	3"
50.0	11'-5"	3 7/8"	3"
52.5	11'-3"	3 7/8"	3"
55.0	11'-1"	3 7/8"	3"
57.5	10'-10"	3 7/8"	3"
60.0	10'-7"	3 7/8"	3"
62.5	10'-4"	3 7/8"	3"
65.0	10'-2"	3 7/8"	3"
67.5	10'-0"	3 7/8"	3"
70.0	9'-10"	3 7/8"	3"
72.5	9'-8"	3 7/8"	3"
75.0	9'-6"	3 7/8"	3"
77.5	9'-4"	3 7/8"	3"
80.0	9'-2"	3 7/8"	3"
82.5	9'-0"	3 7/8"	3"

MAXIMUM DESIGN LOAD "W" (p.s.f.)	MAXIMUM SHUTTER SPAN "L" (ft.)	MINIMUM SEPARATION TO GLASS (in.)	
		*	**
85.0	8'-11"	3 7/8"	3"
87.5	8'-9"	3 7/8"	3"
90.0	8'-5"	3 7/8"	3"
92.5	8'-3"	3 7/8"	3"
95.0	8'-1"	3 7/8"	3"
97.5	7'-10"	3 3/8"	3"
100.0	7'-8"	3 3/8"	3"
102.5	7'-6"	3 3/8"	3"
105.0	7'-3"	3 3/8"	3"
107.5	7'-1"	3 3/8"	3"
110.0	6'-11"	3 3/8"	3"
112.5	6'-10"	3 3/8"	3"
115.0	6'-8"	3 3/8"	3"
117.5	6'-6"	3 3/8"	3"
120.0	6'-5"	3 3/8"	3"
122.5	6'-3"	3 3/8"	3"
125.0	6'-1"	3 3/8"	3"
127.5	6'-0"	3 3/8"	3"
130.0	5'-11"	3 3/8"	3"
132.5	5'-9"	3 3/8"	3"
135.0	5'-8"	3 3/8"	3"
137.5	5'-7"	3 3/8"	3"

MAXIMUM DESIGN LOAD "W" (p.s.f.)	MAXIMUM SHUTTER SPAN "L" (ft.)	MINIMUM SEPARATION TO GLASS (in.)	
		*	**
140.0	5'-6"	3 3/8"	3"
142.5	5'-4"	3 3/8"	3"
145.0	5'-3"	3 3/8"	3"
147.5	5'-2"	3 3/8"	3"
150.0	5'-1"	3 3/8"	3"
152.5	5'-0"	3 3/8"	3"
155.0	4'-11"	3 3/8"	3"
157.5	4'-10"	3 3/8"	3"
160.0	4'-9"	3 3/8"	3"
162.5	4'-8"	3 3/8"	3"
165.0	4'-8"	3 3/8"	3"
167.5	4'-7"	3 3/8"	3"
170.0	4'-6"	3 3/8"	3"
172.5	4'-5"	3 3/8"	3"
175.0	4'-4"	3 3/8"	3"
177.5	4'-4"	3 3/8"	3"
180.0	4'-3"	3 3/8"	3"

TABLE 1:

MINIMUM SEPARATION BETWEEN GLASS AND SHUTTER FOR A GIVEN SHUTTER SPAN "L" FOR SHUTTERS INSTALLED WITHIN THE FIRST 30'-0" ABOVE GRADE OF A GIVEN BUILDING. 30'-0" ELEVATION SHALL BE MEASURED AT BOTTOM OF SHUTTER SEPARATION TO BE MEASURED AS INDICATED ON SECTION D, SHEET 4 OF 10.

SHUTTER SPAN "L" (ft.)	MINIMUM SEPARATION
LESS OR EQUAL THAN 8'-0"	3 3/8"
>8'-0" TO 12'-0"	3 7/8"

PRODUCT REVISED
as complying with the Florida
Buiding Code
Acceptance No 03-0130.10
Expiration Date 02/11/2008
By Helena A. Molina
Miami Dade Product Control
Division

* FOR SHUTTERS INSTALLED WITHING THE FIRST 30'-0" ELEVATION OF BUILDING. SEE TABLE 1 FOR MINIMUM SEPARATION TO GLASS FOR SPANS SHORTER THAN THE MAXIMUM ALLOWED SHOWN ON SCHEDULE.

** FOR SHUTTERS INSTALLED ABOVE 30'-0" ELEVATION OF BUILDING, MEASURED AT BOTTOM OF SHUTTER

JAN 23 2003

F.B.C.(H.V.H.Z.)/MIAMI-DADE COUNTY

TILTECO INC.
TILLIT TESTING & ENGINEERING COMPANY
6595 N.W. 36th. St., Ste. 217, VIRGINIA GARDENS, FLORIDA 33166
Phone : (305)871-1530 . Fax : (305)871-1531
EB-0006719
WALTER A. TILLIT Jr., P. E.
FLORIDA Lic. # 44167

ASSA / RESIDENTIAL BERTHA ACCORDION SHUTTER

HURRICANE BUSTER BROTHERS, INC.
(ASSA # 155)
8752 S.W. 129th ST.
MIAMI, FL 33176

REV. No	DESCRIPTION	DATE	REV. No	DESCRIPTION	DATE
1	OLD DWG 99-352	1/23/03	3	–	–
2	–	–	4	–	–

AS SHOWN
SCALE

1/23/03
DATE

03-020
DRAWING No

MAXIMUM DESIGN PRESSURE RATING "W" (p.s.f.) AND CORRESPONDING MAXIMUM ANCHOR SPACING (in.) SCHEDULE. +

MAXIMUM DESIGN LOAD "W" (p.s.f.)	SECTIONS A, A1, C — WALL MOUNTING INSTALLATION AT TOP OR BOTTOM (TO CONCRETE)			SECTIONS A, A1, C — WALL MOUNTING INSTALLATION AT BOTTOM (TO MASONRY)			SECTIONS B, & B1 — CEILING & FLOOR MOUNTING INSTALLATION AT TOP OR BOTTOM (TO CONCRETE)		
	NOTE 1	NOTE 2	NOTE 3	NOTE 1	NOTE 2	NOTE 3	NOTE 1	NOTE 2	NOTE 3
FROM 40.0 TO 62.5	9"	9"	9"	9"	8"	6 1/2"	9"	7"	5 1/2"
	9"	9"	9"	9"	5 1/2"	4 1/2"	9"	9"	9"
FROM 62.6 TO 75.0	9"	9"	8"	9"	6 1/2"	6"	9"	6"	5"
	9"	9"	9"	8"	4 1/2"	4"	9"	9"	8"
FROM 75.1 TO 92.5	9"	7"	7"	9"	5 1/2"	5 1/2"	8"	5"	–
	9"	9"	9"	6 1/2"	4"	4"	9"	7 1/2"	7 1/2"
FROM 92.6 TO 120.0	9"	7"	–	7"	5 1/2"	–	6"	5"	–
	9"	9"	–	5"	4"	–	9"	7 1/2"	–
FROM 120.1 TO 180.0	7"	7"	–	5 1/2"	5 1/2"	–	5"	5"	–
	9"	9"	–	4"	4"	–	7 1/2"	7 1/2"	–

ANCHOR SPACING LEGEND

(1) Max. ANCHOR SPCG. VALID FOR SPANS OF 5'-0" OR LESS.
(2) Max. ANCHOR SPCG. VALID FOR SPANS GREATER THAN 5'-0" TO 8'-6".
(3) Max. ANCHOR SPCG. VALID FOR SPANS GREATER THAN 8'-6" TO Max. ALLOWED.

ZAMAC NAILIN
TAPCON OR CALK-IN

ANCHOR SPACING LEGEND

NOTES ON ANCHOR SPACING SCHEDULE

\+ SEE SHEET 9 & 10 OF 10 FOR ANCHOR TYPE & SPACING FOR INSTALLATIONS INTO WOOD FRAME BUILDINGS.
MAXIMUM ANCHOR SPACINGS ARE VALID FOR 3 1/2" EDGE DISTANCE. FOR E. D. LESS THAN 3 1/2", REDUCE ANCHOR SPACING BY MULTIPLYING SPACINGS SHOWN ON SCHEDULE BY THE FOLLOWING FACTORS. (Min. E. D. FOR CALK-IN IS 2 1/2").
THIS OPERATION SHALL ONLY BE PERFORMED WHEN REQUIRED SPACING RESULTS INTO A MINIMUM OF 3" O.C.

ACTUAL E. D.= EDGE DISTANCE	FACTOR	
	TAPCON / ZAMAC NAILIN	CALK-IN
3"	.86	.75
2 1/2"	.71	.50
2"	.50	–

PRODUCT REVISED
as complying with the Florida
Buiding Code
Acceptance No 03-0130.10
Expiration Date 02/11/2008
By Helena A. Molina
Miami Dade Product Control
Division

F.B.C.(H.V.H.Z.)/MIAMI-DADE COUNTY

JAN 23 2003

TILTECO INC.
TILLIT TESTING & ENGINEERING COMPANY
8595 N.W. 38th. St., Ste. 217, VIRGINIA GARDENS, FLORIDA 33166
Phone : (305)871-1530 . Fax : (305)871-1531
EB-0006719
WALTER A. TILLIT Jr., P. E.
FLORIDA Lic. # 44167

ASSA / RESIDENTIAL BERTHA ACCORDION SHUTTER

HURRICANE BUSTER BROTHERS, INC.
(ASSA # 155)
8752 S.W. 129th ST.
MIAMI, FL 33176

REV. No	DESCRIPTION	DATE	REV. No	DESCRIPTION	DATE
1	OLD DWG 99-352	1/23/03	3	–	–
2	–	–	4	–	–

AS SHOWN
SCALE
1/23/03
DATE
03-020
DRAWING No
SHEET 8 OF 10

INSTALLATION DETAILS ON EXISTING WOOD BUILDINGS

NOTES:

1. INSTALLATIONS ARE ONLY VALID FOR INSTALLATIONS WITH DESIGN WIND LOADS LESS OR EQUAL THAN 75 p.s.f. AND 9'-0" Max. SHUTTER SPAN.
2. FOR NEW WOOD FRAME CONSTRUCTION: WOOD MEMBERS TO BE SOUTHERN PINE No. 2, W/ SPECIFIC DENSITY OF 0.55 OR EQUAL.

NOTE FOR COMBINATION OF SECTIONS:

WALL/FLOOR/CEILING MOUNTING SECTIONS CAN BE COMBINED IN ANY WAY TO SUIT ANY INSTALLATION.

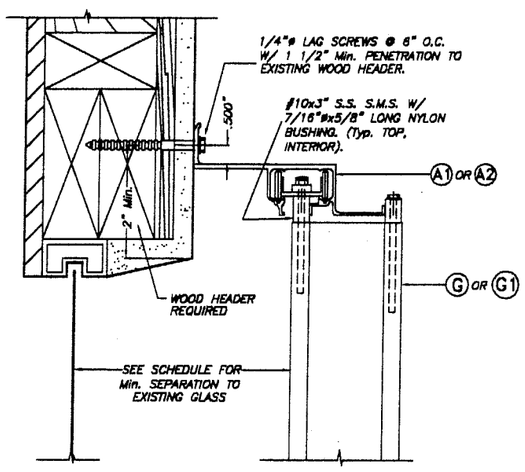

ALTERNATIVE 1

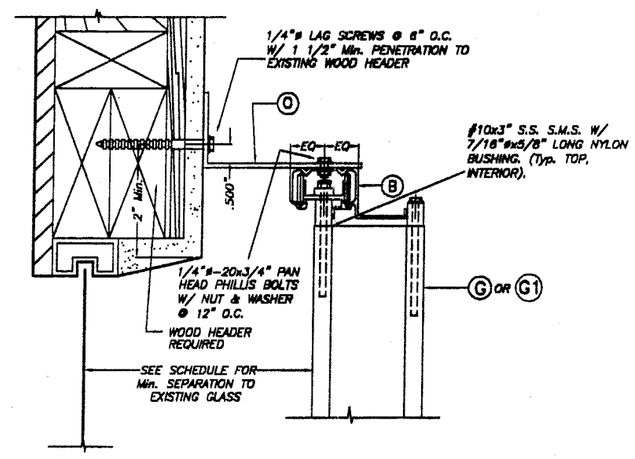

ALTERNATIVE 2

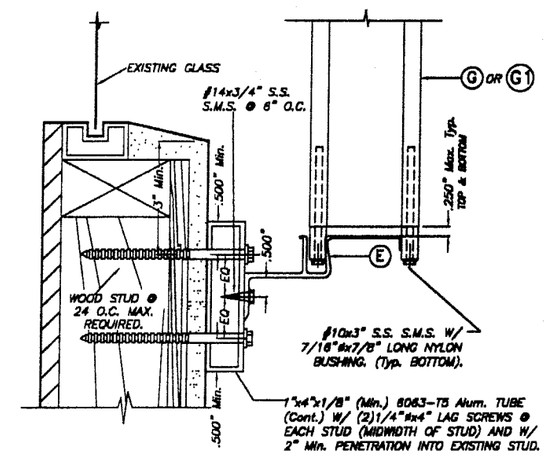

ALTERNATIVE 3

PRODUCT REVISED
as complying with the Florida
Buiding Code
Acceptance No 03-0130.10
Expiration Date 02/11/2008
By Helmy A. Moler
Miami Dade Product Control
Division

WALL MOUNTING INSTALLATION – SECTION A

SCALE: 1/4" = 1"

F.B.C.(H.V.H.Z.)/MIAMI-DADE COUNTY

JAN 23 2003

TILTECO INC.
TILLIT TESTING & ENGINEERING COMPANY
8595 N.W. 38th. St., Ste. 217, VIRGINIA GARDENS, FLORIDA 33166
Phone : (305)871-1530 . Fax : (305)871-1531
EB-0006719
WALTER A. TILLIT Jr., P. E.
FLORIDA Lic. # 44167

ASSA / RESIDENTIAL BERTHA ACCORDION SHUTTER

HURRICANE BUSTER BROTHERS, INC.
(ASSA # 155)
8752 S.W. 129th ST.
MIAMI, FL 33176

REV. No	DESCRIPTION	DATE	REV. No	DESCRIPTION	DATE
1	OLD DWG 99-352	1/23/03	3	–	–
2	–	–	4	–	–

AS SHOWN SCALE
1/23/03 DATE
03-020 DRAWING No
SHEET 9 OF 10

INSTALLATION DETAILS ON EXISTING WOOD BUILDINGS

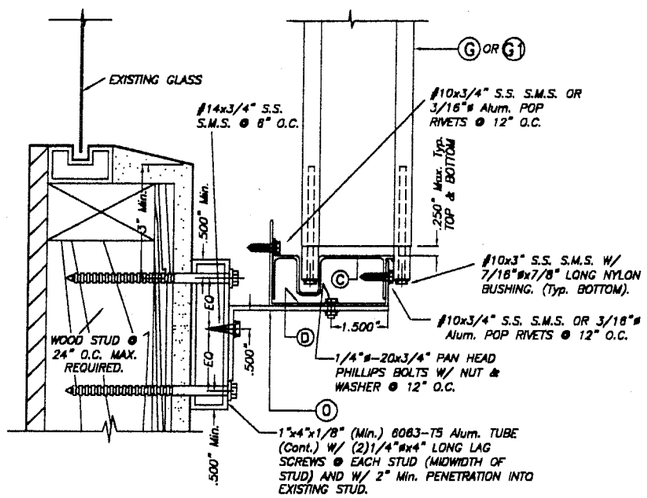

ALTERNATIVE 5

SCALE: 1/4" = 1"

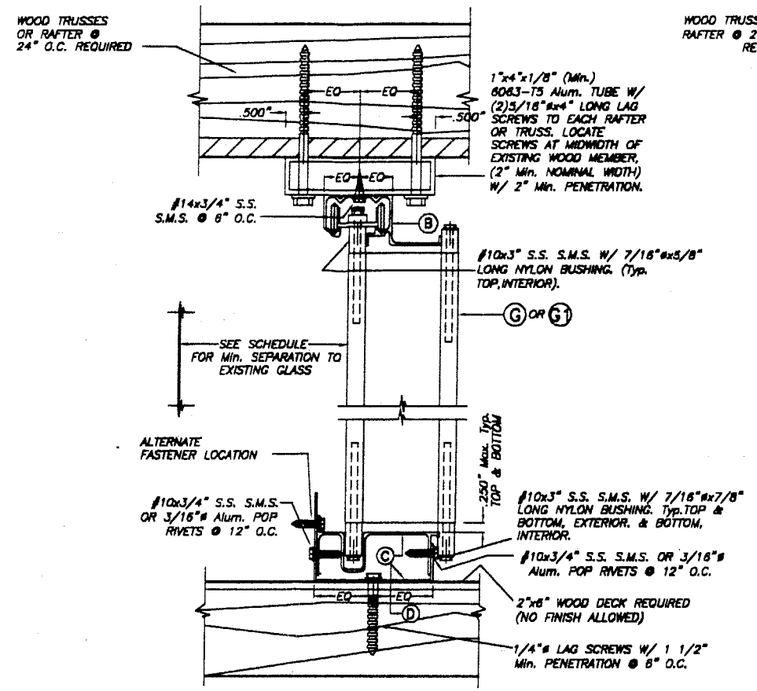

CEILING & FLOOR MOUNTING INSTALLATION — SECTION B

SCALE: 1/4" = 1"

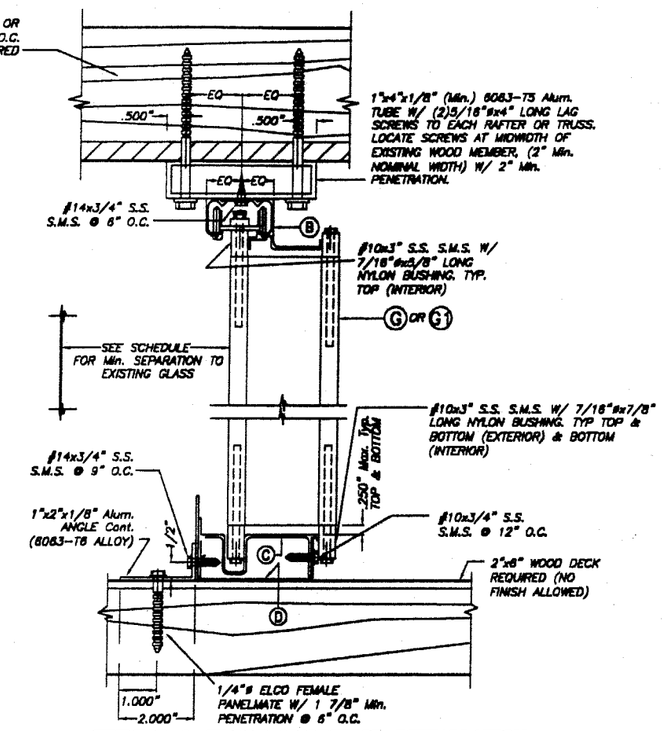

CEILING & FLOOR MOUNTING INSTALLATION — SECTION B1

SCALE: 1/4" = 1"

NOTE :

WALL/FLOOR/CEILING MOUNTING SECTIONS CAN BE COMBINED IN ANY WAY TO SUIT ANY INSTALLATION.

NOTES :

1. INSTALLATIONS ARE ONLY VALID FOR INSTALLATIONS WITH DESIGN WIND LOADS LESS OR EQUAL THAN 75 p.s.f. AND 9'-0" Max. SHUTTER SPAN.
2. FOR NEW WOOD FRAME CONSTRUCTION: WOOD MEMBERS TO BE SOUTHERN PINE No. 2, W/ SPECIFIC DENSITY OF 0.55 OR EQUAL.

PRODUCT REVISED
as complying with the Florida
Buiding Code
Acceptance No 03-0130.10
Expiration Date 02/11/2008
By Helmy A. Melen
Miami Dade Product Control
Division

F.B.C.(H.V.H.Z.)/MIAMI-DADE COUNTY

JAN 23 2003

TILTECO INC.
TILLIT TESTING & ENGINEERING COMPANY
6585 N.W. 38th. St., Ste. 217, VIRGINIA GARDENS, FLORIDA 33166
Phone : (305)871-1530 . Fax : (305)871-1531
EB-0006719
WALTER A. TILLIT Jr., P. E.
FLORIDA Lic. # 44167

ASSA / RESIDENTIAL BERTHA ACCORDION SHUTTER

HURRICANE BUSTER BROTHERS, INC.
(ASSA # 155)
8752 S.W. 129th ST.
MIAMI, FL 33176

REV. No	DESCRIPTION	DATE	REV. No	DESCRIPTION	DATE
1	OLD DWG 99-352	1/23/03	3	-	-
2	-	-	4	-	-

AS SHOWN SCALE
1/23/03 DATE
03-020 DRAWING No
SHEET 10 OF 10