MIAMI-DADE

BUILDING CODE COMPLIANCE OFFICE (BCCO)
PRODUCT CONTROL DIVISION

MIAMI-DADE COUNTY, FLORIDA
METRO-DADE FLAGLER BUILDING
140 WEST FLAGLER STREET, SUITE 1603
MIAMI, FLORIDA 33130-1563
(305) 375-2901 FAX (305) 375-2908

NOTICE OF ACCEPTANCE (NOA)

Caradco Windows & Doors
201 Evans Road
Rantoul, IL 61866

SCOPE:
This NOA is being issued under the applicable rules and regulations governing the use of construction materials. The documentation submitted has been reviewed by Miami-Dade County Product Control Division and accepted by the Board of Rules and Appeals (BORA) to be used in Miami Dade County and other areas where allowed by the Authority Having Jurisdiction (AHJ).

This NOA shall not be valid after the expiration date stated below. The Miami-Dade County Product Control Division (In Miami Dade County) and/or the AHJ (in areas other than Miami Dade County) reserve the right to have this product or material tested for quality assurance purposes. If this product or material fails to perform in the accepted manner, the manufacturer will incur the expense of such testing and the AHJ may immediately revoke, modify, or suspend the use of such product or material within their jurisdiction. BORA reserves the right to revoke this acceptance, if it is determined by Miami-Dade County Product Control Division that this product or material fails to meet the requirements of the applicable building code.

This product is approved as described herein, and has been designed to comply with the High Velocity Hurricane Zone of the Florida Building Code.

DESCRIPTION: Series "Car-Clad" Clad Radius & Geometric Spandrel Wood Fixed Window

APPROVAL DOCUMENT: Drawing No.W98-80, titled " 'Car-Clad' Wood Fixed Window", sheets 1 through 8 of 8, prepared by Al Farooq Corporation, dated 10/10/98 with revision on 10/19/02, signed and sealed by Humayoun Farooq, P.E., bearing the Miami-Dade County Product Control Revision stamp with the Notice of Acceptance number and expiration date by the Miami-Dade County Product Control Division.

MISSILE IMPACT RATING: Large and Small Missile Impact

LABELING: Each unit shall bear a permanent label with the manufacturer's name or logo, city, state and following statement: "Miami-Dade County Product Control Approved", unless otherwise noted herein.

RENEWAL of this NOA shall be considered after a renewal application has been filed and there has been no change in the applicable building code negatively affecting the performance of this product.

TERMINATION of this NOA will occur after the expiration date or if there has been a revision or change in the materials, use, and/or manufacture of the product or process. Misuse of this NOA as an endorsement of any product, for sales, advertising or any other purposes shall automatically terminate this NOA. Failure to comply with any section of this NOA shall be cause for termination and removal of NOA.

ADVERTISEMENT: The NOA number preceded by the words Miami-Dade County, Florida, and followed by the expiration date may be displayed in advertising literature. If any portion of the NOA is displayed, then it shall be done in its entirety.

INSPECTION: A copy of this entire NOA shall be provided to the user by the manufacturer or its distributors and shall be available for inspection at the job site at the request of the Building Official.
This NOA **revises NOA # 01-1203.13** and, consists of this page 1 as well as approval document mentioned above.
The submitted documentation was reviewed by **Theodore Berman, P.E.**

NOTICE OF ACCEPTANCE: EVIDENCE SUBMITTED

(For File ONLY. Not part of NOA)

A. DRAWINGS

1. Manufacturer's die drawings and sections.
2. Drawing No.W98-80, titled " 'Car-Clad' Wood Fixed Window", sheets 1 through 8 of 8, prepared by Al Farooq Corporation, dated 10/10/98 with revision on 10/19/02, signed and sealed by Humayoun Farooq, P.E.

B. TESTS

1. Test reports on 1) Air Infiltration Test, per FBC, TAS 202-94
   2) Uniform Static Air Pressure Test, Loading per FBC, TAS 202-94
   3) Water Resistance Test, per FBC, TAS 202-94
   4) Large Missile Impact Test per FBC, TAS 201-94
   5) Cyclic Wind Pressure Loading per FBC, TAS 203-94

   along with marked-up drawings and installation diagram of a wood fixed window, prepared by Stork Twin City Testing Corporation, Test Report No. **180-6359**, dated 4/29/02, signed and sealed by Derrick Swanson, P.E.

Submitted under NOA# 99-0302.01

2. Test reports on 1) Air Infiltration Test, per FBC, TAS 202-94
   2) Uniform Static Air Pressure Test, Loading per FBC, TAS 202-94
   3) Water Resistance Test, per FBC, TAS 202-94
   4) Large Missile Impact Test per FBC, TAS 201-94
   5) Cyclic Wind Pressure Loading per FBC, TAS 203-94
   6) Forced Entry Test, per FBC 2411 3.2.1 and TAS 202-94

   along with marked-up drawings and installation diagram of a rectangular, arched top/rectangular, and mulled aluminum clad wood fixed window, prepared by Hurricane Test Laboratories, Inc., Test Report No. **HTL-0119-0603-98**, dated from 6/4/98 to 6/12/98, signed and sealed by Timothy S. Marshall, P.E.

3. Test reports on 1) Air Infiltration Test, per FBC, TAS 202-94
   2) Uniform Static Air Pressure Test, Loading per FBC, TAS 202-94
   3) Water Resistance Test, per FBC, TAS 202-94

   along with marked-up drawings and installation diagram of a rectangular aluminum clad wood fixed window, prepared by Hurricane Test Laboratories, Inc., Test Report No. **HTL-0119-0705-98**, dated 7/7//98, signed and sealed by Timothy S. Marshall, P.E.

Theodore Berman, P.E.
Deputy Director, Product Control Division
NOA No 03-0210.06
Expiration Date: February 26, 2006
Approval Date: April 24 2003

NOTICE OF ACCEPTANCE: EVIDENCE SUBMITTED

(For File ONLY. Not part of NOA)

4. Test reports on 1) Air Infiltration Test, per FBC, TAS 202-94
2) Uniform Static Air Pressure Test, Loading per FBC, TAS 202-94
3) Water Resistance Test, per FBC, TAS 202-94
along with marked-up drawings and installation diagram of a rectangular, arched top/rectangular, and mulled aluminum clad wood fixed window, prepared by Hurricane Test Laboratories, Inc., Test Report No. **HTL-0119-1105-98**, dated 11/5//98, signed and sealed by Timothy S. Marshall, P.E.

5. Test reports on 1) Air Infiltration Test, per FBC, TAS 202-94
2) Uniform Static Air Pressure Test, Loading per FBC, TAS 202-94
3) Water Resistance Test, per FBC, TAS 202-94
4) Large Missile Impact Test per FBC, TAS 201-94
5) Cyclic Wind Pressure Loading per FBC, TAS 203-94
6) Forced Entry Test, per FBC 2411 3.2.1 and TAS 202-94
along with marked-up drawings and installation diagram of a rectangular aluminum clad wood fixed window, prepared by Hurricane Test Laboratories, Inc., Test Report No. **HTL-0119-1207-98**, dated 12/23/98, signed and sealed by Timothy S. Marshall, P.E.

Submitted under NOA# 98-1028.01

6. Test reports on 1) Air Infiltration Test, per FBC, TAS 202-94
2) Uniform Static Air Pressure Test, Loading per FBC, TAS 202-94
3) Water Resistance Test, per FBC, TAS 202-94
along with marked-up drawings and installation diagram of an mulled quarter standing arch/rectangular aluminum clad wood fixed window, prepared by National Certified Testing Laboratories, Test Report No. **NCTL-210-1852-1(S)**, dated 7/24/96, signed and sealed by Barry D. Portnoy, P.E.

7. Test reports on 1) Air Infiltration Test, per FBC, TAS 202-94
2) Uniform Static Air Pressure Test, Loading per FBC, TAS 202-94
3) Water Resistance Test, per FBC, TAS 202-94
along with marked-up drawings and installation diagram of a fin mounted "clad radius and geometric spandrel" aluminum clad wood fixed windows, prepared by National Certified Testing Laboratories, Test Reports No. **NCTL-210-1800-1, 2, 3 & 4**, dated 01/03/96, signed and sealed by Barry D. Portnoy, P.E.

8. Test reports on 1) Air Infiltration Test, per FBC, TAS 202-94
2) Uniform Static Air Pressure Test, Loading per FBC, TAS 202-94
3) Water Resistance Test, per FBC, TAS 202-94
along with marked-up drawings and installation diagram of a radius aluminum clad wood fixed window, prepared by National Certified Testing Laboratories, Test Report No. **NCTL-210-1695-1S,2S,3S**, dated 1/6/96, signed and sealed by Barry D. Portnoy, P.E.

Theodore Berman, P.E.
Deputy Director, Product Control Division
NOA No 03-0210.06
Expiration Date: February 26, 2006
Approval Date: April 24 2003

NOTICE OF ACCEPTANCE: EVIDENCE SUBMITTED

(For File ONLY. Not part of NOA)

C. CALCULATIONS

1. Anchor Calculations, dated 10/25/02, prepared by Al Farooq Corporation, signed and sealed by Humayoun Farooq, P.E.

Submitted under NOA# 99-0302.01

2. Anchor Calculations and structural analysis for clad radius & geometric spandrel picture window, prepared by Al Farooq Corporation, dated January 13, 1999,

D. MATERIAL CERTIFICATIONS

1. Notice of Acceptance No. **00-0524.06** issued to Nebula Glass International, Inc. for "Glasslam Safety-Plus Laminated Glass" dated 9/21/00, expiring on 9/9/03.
2. Notice of Acceptance No. **02-0115.03**, issued to Globe Amerada Glass Co. for their Glass-Clad Polycarbonate, approved on 2/7/02 and expiring on 9/3/2006.

E. STATEMENTS

1. None

F. OTHER

1. Notice of Acceptance No. **01-1203.13** Caradco Windows & Doors, Aluminum Clad Wood Fixed Picture Window, approved on 1/3/02 and expiring on 11/30/06.
2. Letter from the consultant stating that the product is in compliance with the Florida Building Code (FBC)

Theodore Berman, P.E.
Deputy Director, Product Control Division
NOA No 03-0210.06
Expiration Date: February 26, 2006
Approval Date: April 24 2003

DESIGN LOAD CAPACITY(PSF) – IMPACT RESISTANT WINDOWS (SHUTTERS NOT REQUIRED)

WINDOW DIM.		IMPACT GLASS TYPE '2' PERIMETER ANCHOR SPACING 24" O.C.		IMPACT GLASS TYPE '3' PERIMETER ANCHOR SPACING 12" O.C.		IMPACT GLASS TYPE '3' PERIMETER ANCHOR SPACING 18" O.C.		IMPACT GLASS TYPE '4' PERIMETER ANCHOR SPACING 12" O.C.		IMPACT GLASS TYPE '4' PERIMETER ANCHOR SPACING 18" O.C.		IMPACT GLASS TYPE '5' PERIMETER ANCHOR SPACING 12" O.C.		IMPACT GLASS TYPE '5' PERIMETER ANCHOR SPACING 18" O.C.	
WIDTH	HEIGHT	EXT.(+)	INT.(-)	EXT.(+)	INT.(-)	EXT.(+)	INT.(-)	EXT.(+)	INT.(-)	EXT.(+)	INT.(-)	EXT.(+)	INT.(-)	EXT.(+)	INT.(-)
24'	36'	60.0	75.0	60.0	75.0	60.0	75.0	60.0	75.0	60.0	75.0	75.0	75.0	75.0	75.0
30'		60.0	75.0	60.0	75.0	60.0	75.0	60.0	75.0	60.0	75.0	75.0	75.0	75.0	75.0
36'		60.0	71.5	60.0	75.0	60.0	75.0	60.0	75.0	60.0	75.0	75.0	75.0	75.0	75.0
42'		60.0	60.4	60.0	75.0	60.0	75.0	60.0	75.0	60.0	75.0	75.0	75.0	75.0	75.0
48'		53.3	53.3	60.0	75.0	60.0	75.0	60.0	75.0	60.0	75.0	75.0	75.0	75.0	75.0
54'		47.2	47.2	60.0	75.0	60.0	75.0	60.0	75.0	60.0	75.0	75.0	75.0	75.0	75.0
60'		42.2	42.2	60.0	75.0	60.0	75.0	60.0	75.0	60.0	75.0	75.0	75.0	75.0	75.0
66'		38.5	38.5	60.0	75.0	60.0	75.0	60.0	75.0	60.0	75.0	75.0	75.0	75.0	75.0
72'		34.6	34.6	60.0	75.0	60.0	75.0	60.0	75.0	60.0	75.0	75.0	75.0	75.0	75.0
24'	48'	60.0	75.0	60.0	75.0	60.0	75.0	60.0	75.0	60.0	75.0	75.0	75.0	75.0	75.0
30'		60.0	64.7	60.0	75.0	60.0	75.0	60.0	75.0	60.0	75.0	75.0	75.0	75.0	75.0
36'		53.3	53.3	60.0	75.0	60.0	75.0	60.0	75.0	60.0	75.0	75.0	75.0	75.0	75.0
42'		51.4	56.2	60.0	75.0	60.0	72.8	60.0	75.0	60.0	72.8	75.0	75.0	72.8	72.8
48'		45.0	50.8	60.0	75.0	60.0	63.7	60.0	75.0	60.0	63.7	75.0	75.0	63.7	63.7
54'		45.0	45.6	60.0	71.4	60.0	63.7	60.0	75.0	60.0	63.7	75.0	75.0	63.7	63.7
60'		–	–	60.0	63.7	60.0	63.7	60.0	75.0	60.0	63.7	75.0	75.0	63.7	63.7
66'		–	–	57.2	57.2	57.2	57.2	60.0	75.0	60.0	63.7	75.0	75.0	63.7	63.7
72'		–	–	52.0	52.0	52.0	52.0	60.0	75.0	60.0	63.7	75.0	75.0	63.7	63.7
24'	60'	60.0	75.0	60.0	75.0	60.0	75.0	60.0	75.0	60.0	75.0	75.0	75.0	75.0	75.0
30'		52.2	52.2	60.0	75.0	60.0	75.0	60.0	75.0	60.0	75.0	75.0	75.0	75.0	75.0
36'		42.2	42.2	60.0	75.0	60.0	75.0	60.0	75.0	60.0	75.0	75.0	75.0	75.0	75.0
42'		45.6	45.6	60.0	74.1	60.0	72.8	60.0	75.0	60.0	72.8	75.0	75.0	72.8	72.8
48'		–	–	60.0	63.7	60.0	63.7	60.0	75.0	60.0	63.7	75.0	75.0	63.7	63.7
54'		–	–	55.6	55.6	55.6	55.6	60.0	75.0	56.6	56.6	75.0	75.0	56.6	56.6
60'		–	–	59.0	59.0	50.9	50.9	60.0	75.0	50.9	50.9	75.0	75.0	50.9	50.9
66'		–	–	53.6	53.6	50.9	50.9	60.0	70.8	50.9	50.9	70.8	70.8	50.9	50.9
72'		–	–	49.6	49.6	49.6	49.6	60.0	64.5	50.9	50.9	64.5	64.5	50.9	50.9
24'	72'	60.0	72.1	60.0	75.0	60.0	75.0	60.0	75.0	60.0	75.0	75.0	75.0	75.0	75.0
30'		46.0	46.0	60.0	75.0	60.0	75.0	60.0	75.0	60.0	75.0	75.0	75.0	75.0	75.0
36'		34.6	34.6	60.0	75.0	60.0	75.0	60.0	75.0	60.0	75.0	75.0	75.0	75.0	75.0
42'		–	–	60.0	61.9	60.0	61.9	60.0	75.0	60.0	72.8	75.0	75.0	72.8	72.8
48'		–	–	52.0	52.0	52.0	52.0	60.0	75.0	60.0	63.7	75.0	75.0	63.7	63.7
54'		–	–	45.7	45.7	45.7	45.7	60.0	72.4	56.6	56.6	72.4	72.4	56.6	56.6
60'		–	–	49.6	49.6	49.6	49.6	60.0	64.5	50.9	50.9	64.5	64.5	50.9	50.9
66'		–	–	45.6	45.6	45.6	45.6	54.5	58.0	46.3	46.3	58.0	58.0	46.3	46.3
72'		–	–	42.8	42.8	42.4	42.4	50.0	52.7	42.4	42.4	52.7	52.7	42.4	42.4
24'	84'	60.0	67.6	60.0	75.0	60.0	75.0	60.0	75.0	60.0	75.0	75.0	75.0	75.0	75.0
30'		42.8	42.8	60.0	75.0	60.0	75.0	60.0	75.0	60.0	75.0	75.0	75.0	75.0	75.0
36'		–	–	60.0	68.4	60.0	68.4	60.0	75.0	60.0	75.0	75.0	75.0	75.0	75.0
42'		–	–	53.5	53.5	53.5	53.5	60.0	75.0	60.0	72.8	75.0	75.0	72.8	72.8
48'		–	–	44.5	44.5	44.5	44.5	60.0	72.1	60.0	63.7	72.1	72.1	63.7	63.7
54'		–	–	39.4	39.4	39.4	39.4	60.0	61.9	56.6	56.6	61.9	61.9	56.6	56.6
60'		–	–	43.3	43.3	43.3	43.3	54.6	54.6	50.9	50.9	54.6	54.6	50.9	50.9
66'		–	–	40.0	40.0	40.0	40.0	49.0	49.0	46.3	46.3	–	–	–	–
24'	96'	60.0	66.9	60.0	75.0	60.0	75.0	60.0	75.0	60.0	75.0	75.0	75.0	75.0	75.0
30'		–	–	60.0	75.0	60.0	75.0	60.0	75.0	60.0	75.0	75.0	75.0	75.0	75.0
36'		–	–	60.0	64.1	60.0	64.1	60.0	75.0	60.0	75.0	75.0	75.0	75.0	75.0
42'		–	–	47.6	47.6	47.6	47.6	60.0	75.0	60.0	72.8	75.0	75.0	72.8	72.8
48'		–	–	39.5	39.5	39.5	39.5	60.0	66.2	60.0	63.7	66.2	66.2	63.7	63.7
54'		–	–	34.6	34.6	34.6	34.6	54.5	54.5	54.5	54.5	54.5	54.5	54.5	54.5
60'		–	–	37.4	37.4	37.4	37.4	47.6	47.6	47.6	47.6	–	–	–	–
24'	108'	–	–	60.0	75.0	60.0	75.0	60.0	75.0	60.0	75.0	75.0	75.0	75.0	75.0
30'		–	–	60.0	75.0	60.0	75.0	60.0	75.0	60.0	75.0	75.0	75.0	75.0	75.0
36'		–	–	60.0	62.2	60.0	62.2	60.0	75.0	60.0	75.0	75.0	75.0	75.0	75.0
42'		–	–	45.7	45.7	45.7	45.7	60.0	75.0	60.0	72.8	75.0	75.0	72.8	72.8
48'		–	–	35.7	35.7	35.7	35.7	59.2	59.2	59.2	59.2	59.2	59.2	59.2	59.2
24'	120'	–	–	60.0	75.0	60.0	75.0	60.0	75.0	60.0	75.0	75.0	75.0	75.0	75.0
30'		–	–	60.0	75.0	60.0	75.0	60.0	75.0	60.0	75.0	75.0	75.0	75.0	75.0
36'		–	–	60.0	61.0	60.0	61.0	60.0	75.0	60.0	75.0	75.0	75.0	75.0	75.0
42'		–	–	44.3	44.3	44.3	44.3	60.0	74.8	60.0	72.8	74.8	74.8	72.8	72.8
48'		–	–	33.7	33.7	33.7	33.7	56.4	56.4	56.4	56.4	–	–	–	–

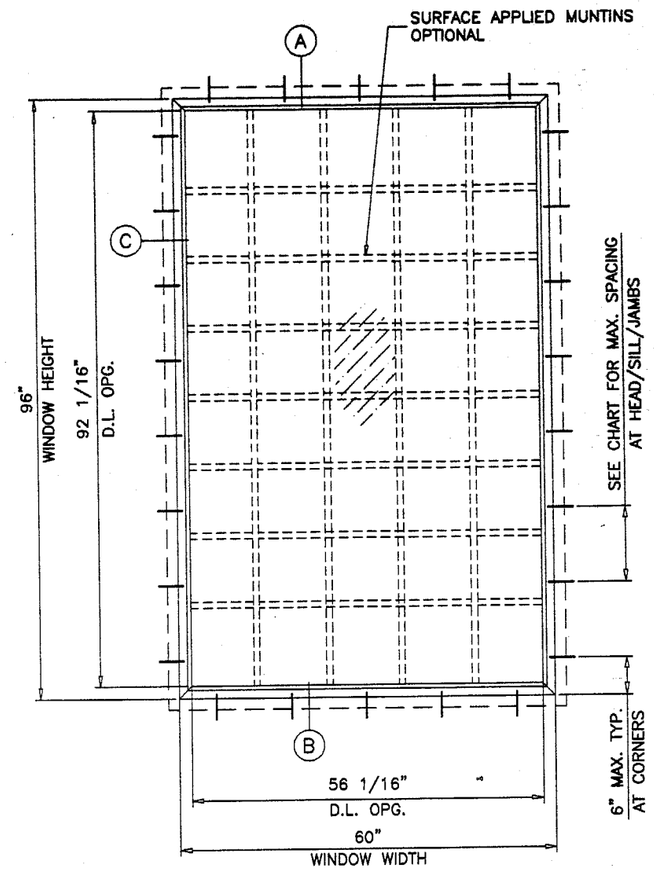

TYPICAL ELEVATION
TESTED UNIT (IMPACT)

SEE SHEET 3 FOR ALTERNATE SHAPES AVAILABLE

PICTURE WINDOWS
CLAD RADIUS & GEOMETRIC SPANDREL

NOTES

1. THIS PRODUCT IS DESIGNED TO COMPLY WITH THE HIGH VELOCITY HURRICANE ZONE OF THE 2001 FLORIDA BUILDING CODE. ALSO FOR WIND LOADS AS PER ASCE 7-88, ASCE 7-93, ASCE 7-95 OR ASCE 7-98 AS REQUIRED BY PREVAILING BUILDING CODE.
2. WOOD BUCKS BY OTHERS, MUST BE ANCHORED PROPERLY TO TRANSFER LOADS TO THE STRUCTURE.
3. ANCHORS SHALL BE AS LISTED, SPACED AS SHOWN ON DETAILS. ANCHOR EMBEDMENT TO BASE MATERIAL SHALL BE BEYOND WALL DRESSING OR STUCCO.
4. ANCHORING OR LOADING CONDITION NOT SHOWN IN THESE DETAILS ARE NOT PART OF THIS APPROVAL.

Engr: DR. HUMAYOUN FAROOQ
STRUCTURES
FLA. PE # 16557
C.A.N. 3538

JAN 28 2003

PRODUCT REVISED
as complying with the Florida Buiding Code
Acceptance No 03-0204.05
Expiration Date 11/30/06
By [signature]
Miami Dade Product Control Division

AL-FAROOQ CORPORATION
ENGINEERS, PLANNERS & PRODUCT DESIGN
1235 SW 87 AVE.
MIAMI, FLORIDA 33174
TEL. (305) 264-8100 FAX. (305) 262-6978
COMP-ANL\W98-80CO

'CAR CLAD' WOOD FIXED WINDOW

CARADCO WOOD WINDOWS & PATIO DOORS
201 EVANS ROAD
RANTOUL, ILLINOIS 61866
TEL. (217) 893-4444 FAX (217) 893-0921

revisions:

no	date	by	description
A	06.09.99	H	SHEETS 7 & 8 REV.
B	11.26.01	H	CHARTS REV. PER ASTM E-1300 GLASS TYPES REV.
C	10.19.02	H	GLASS TYPE 5 ADD. CHART REV.

date: 10-10-98
scale: 1/2" = 1"
dr. by: HAMID
chk. by:

drawing no.
W98-80

DESIGN LOAD CAPACITY - PSF

NON-IMPACT WINDOWS
DADE COUNTY APPROVED IMPACT RESISTANT SHUTTERS REQD.

WINDOW DIMS.		WINDOWS FITTED WITH INSULATED GLASS								PERIMETER ANCHORS SPACED AS SHOWN					
		DSB-ANN.		5/32"-ANN.		3/16"-ANN.		3/16"-TEMP.		# 10 S.M.S.			3/16" TAPCONS		
WIDTH	HEIGHT	EXT.(+)	INT.(-)	EXT.(+)	INT.(-)	EXT.(+)	INT.(-)	EXT.(+)	INT.(-)	12"	18"	24"	12"	18"	24"
24"	24"	100.0	100.0	100.0	100.0	100.0	100.0	100.0	100.0	119.0	79.3	59.5	191.0	127.3	95.5
36"		75.0	75.0	93.8	93.8	100.0	100.0	100.0	100.0	119.0	79.3	59.5	191.0	127.3	95.5
48"		66.7	66.7	83.3	83.3	100.0	100.0	100.0	100.0	119.0	79.3	59.5	191.0	127.3	95.5
60"		53.1	53.1	78.1	78.1	93.8	93.8	93.8	93.8	119.0	79.3	59.5	191.0	127.3	95.5
72"		45.9	45.9	73.1	73.1	90.0	90.0	90.0	90.0	119.0	79.3	59.5	191.0	127.3	95.5
84"		41.8	41.8	68.8	68.8	87.5	87.5	87.5	87.5	119.0	79.3	59.5	191.0	127.3	95.5
96"		41.0	41.0	68.9	68.9	85.7	85.7	85.7	85.7	119.0	79.3	59.5	191.0	127.3	95.5
24"	30"	83.3	83.3	100.0	100.0	100.0	100.0	100.0	100.0	119.0	79.3	59.5	191.0	127.3	95.5
36"		68.6	68.6	85.7	85.7	100.0	100.0	100.0	100.0	95.2	63.5	47.6	152.8	101.9	76.4
48"		58.2	58.2	72.7	72.7	87.3	87.3	87.3	87.3	95.2	63.5	47.6	152.8	101.9	76.4
60"		47.7	47.7	62.5	62.5	80.0	80.0	80.0	80.0	95.2	63.5	47.6	152.8	101.9	76.4
72"		35.8	35.8	50.6	50.6	70.9	70.9	75.8	75.8	95.2	63.5	47.6	152.8	101.9	76.4
84"		-	-	45.2	45.2	63.4	63.4	73.0	73.0	95.2	63.5	47.6	152.8	101.9	76.4
96"		-	-	42.3	42.3	60.1	60.1	71.1	71.1	95.2	63.5	47.6	152.8	101.9	76.4
24"	36"	75.0	75.0	93.8	93.8	100.0	100.0	100.0	100.0	119.0	79.3	59.5	191.0	127.3	95.5
36"		66.7	66.7	83.3	83.3	100.0	100.0	100.0	100.0	79.3	52.9	-	127.3	84.9	63.7
48"		53.3	53.3	66.7	66.7	80.0	80.0	80.0	80.0	79.3	52.9	-	127.3	84.9	63.7
60"		47.2	47.2	59.5	59.5	71.4	71.4	71.4	71.4	79.3	52.9	-	127.3	84.9	63.7
72"		-	-	46.4	46.4	57.2	57.2	66.7	66.7	79.3	52.9	-	127.3	84.9	63.7
84"		-	-	39.2	39.2	48.8	48.8	63.6	63.6	79.3	52.9	-	127.3	84.9	63.7
96"		-	-	32.2	32.2	42.5	42.5	61.5	61.5	79.3	52.9	-	127.3	84.9	63.7
24"	42"	70.0	70.0	87.5	87.5	100.0	100.0	100.0	100.0	119.0	79.3	59.5	191.0	127.3	95.5
36"		58.3	58.3	72.9	72.9	87.5	87.5	87.5	87.5	79.3	52.9	-	127.3	84.9	63.7
48"		50.8	50.8	63.5	63.5	76.2	76.2	76.2	76.2	68.0	45.3	-	109.1	72.8	54.6
60"		-	-	54.9	54.9	65.9	65.9	65.9	65.9	68.0	45.3	-	109.1	72.8	54.6
72"		-	-	47.0	47.0	56.3	56.3	60.5	60.5	68.0	45.3	-	109.1	72.8	54.6
84"		-	-	36.9	36.9	44.3	44.3	57.1	57.1	68.0	45.3	-	109.1	72.8	54.6
96"		-	-	-	-	38.7	38.7	54.9	54.9	68.0	45.3	-	109.1	72.8	54.6
24"	48"	66.7	66.7	83.3	83.3	100.0	100.0	100.0	100.0	119.0	79.3	59.5	191.0	127.3	95.5
36"		53.3	53.3	66.7	66.7	80.0	80.0	80.0	80.0	79.3	52.9	-	127.3	84.9	63.7
48"		47.5	47.5	62.5	62.5	75.0	75.0	75.0	75.0	59.5	-	-	95.5	63.7	47.8
60"		-	-	52.1	52.1	62.5	62.5	62.5	62.5	59.5	-	-	95.5	63.7	47.8
72"		-	-	43.6	43.6	53.5	53.5	56.3	56.3	59.5	-	-	95.5	63.7	47.8
84"		-	-	-	-	45.4	45.4	52.5	52.5	59.5	-	-	95.5	63.7	47.8
96"		-	-	-	-	36.4	36.4	50.0	50.0	59.5	-	-	95.5	63.7	47.8
24"	54"	60.1	60.1	80.4	80.4	96.4	96.4	96.4	96.4	119.0	79.3	59.5	191.0	127.3	95.5
36"		50.0	50.0	62.5	62.5	75.0	75.0	75.0	75.0	79.3	52.9	-	127.3	84.9	63.7
48"		-	-	56.3	56.3	67.5	67.5	67.5	67.5	59.5	-	-	95.5	63.7	47.8
60"		-	-	47.3	47.3	59.9	59.9	60.6	60.6	52.9	-	-	84.9	56.6	42.4
72"		-	-	-	-	50.9	50.9	53.3	53.3	52.9	-	-	84.9	56.6	42.4
84"		-	-	-	-	42.8	42.8	49.1	49.1	52.9	-	-	84.9	56.6	42.4
96"		-	-	-	-	36.9	36.9	46.4	46.4	52.9	-	-	84.9	56.6	42.4

DESIGN LOAD CAPACITY - PSF

NON-IMPACT WINDOWS
DADE COUNTY APPROVED IMPACT RESISTANT SHUTTERS REQD.

WINDOW DIMS.		WINDOWS FITTED WITH INSULATED GLASS								PERIMETER ANCHORS SPACED AS SHOWN					
		DSB-ANN.		5/32"-ANN.		3/16"-ANN.		3/16"-TEMP.		# 10 S.M.S.			3/16" TAPCONS		
WIDTH	HEIGHT	EXT.(+)	INT.(-)	EXT.(+)	INT.(-)	EXT.(+)	INT.(-)	EXT.(+)	INT.(-)	12"	18"	24"	12"	18"	24"
24"	60"	53.1	53.1	78.1	78.1	93.8	93.8	93.8	93.8	119.0	79.3	59.5	191.0	127.3	95.5
36"		47.2	47.2	59.5	59.5	71.4	71.4	71.4	71.4	79.3	52.9	-	127.3	84.9	63.7
48"		-	-	52.1	52.1	62.5	62.5	62.5	62.5	59.5	-	-	95.5	63.7	47.8
60"		-	-	43.6	43.6	55.6	55.6	60.0	60.0	47.6	-	-	76.4	50.9	-
72"		-	-	-	-	46.4	46.4	51.4	51.4	47.6	-	-	76.4	50.9	-
84"		-	-	-	-	38.7	38.7	46.7	46.7	47.6	-	-	76.4	50.9	-
24"	66"	49.3	49.3	76.4	76.4	91.7	91.7	91.7	91.7	119.0	79.3	59.5	191.0	127.3	95.5
36"		45.9	45.9	55.4	55.4	66.8	66.8	68.8	68.8	79.3	52.9	-	127.3	84.9	63.7
48"		-	-	48.1	48.1	58.9	58.9	58.9	58.9	59.5	-	-	95.5	63.7	47.8
60"		-	-	-	-	50.8	50.8	55.0	55.0	47.6	-	-	76.4	50.9	-
72"		-	-	-	-	43.0	43.0	50.3	50.3	43.3	-	-	69.5	46.3	-
24"	72"	-	-	73.1	73.1	90.0	90.0	90.0	90.0	119.0	79.3	59.5	191.0	127.3	95.5
36"		-	-	46.4	46.4	57.2	57.2	66.7	66.7	79.3	52.9	-	127.3	84.9	63.7
48"		-	-	43.6	43.6	53.5	53.5	56.3	56.3	59.5	-	-	95.5	63.7	47.8
60"		-	-	-	-	46.4	46.4	51.4	51.4	47.6	-	-	76.4	50.9	-
72"		-	-	-	-	40.0	40.0	50.0	50.0	-	-	-	63.7	42.4	-

MATCH DESIGN LOAD REQUIREMENTS ON SHOWN SIZES TO GLASS AND ANCHOR TYPE/SPACING AS SHOWN ON TABLE.

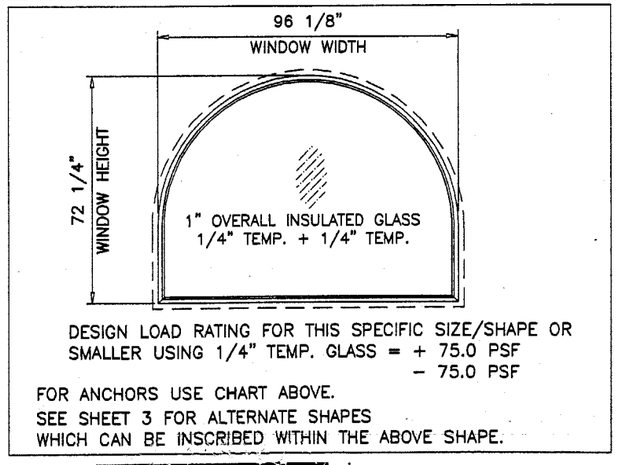

Engr: DR. HUMAYOUN FAROOQ
STRUCTURES
FLA. PE # 16557
C.A.N. 3538

JAN 28 2003

PRODUCT REVISED
as complying with the Florida Building Code
Acceptance No 03-0204.05
Expiration Date 11/30/06
By [signature]
Miami Dade Product Control Division

AL-FAROOQ CORPORATION
ENGINEERS, PLANNERS & PRODUCT DESIGN
1235 SW 87 AVE
MIAMI, FLORIDA 33174
TEL. (305) 264-8100 FAX. (305) 262-6978
COMP-ANL\W98-80CO

'CAR CLAD' WOOD FIXED WINDOW

CARADCO WOOD WINDOWS & PATIO DOORS
201 EVANS ROAD
RANTOUL, ILLINOIS 61866
TEL. (217) 893-4444 FAX (217) 893-0921

revisions:

no	date	by	description
C	10.19.02		NO CHANGE

date: 10-10-98
scale: 1/2" = 1"
dr. by: HAMID
chk. by:

drawing no.
W98-80

sheet 2 of 8

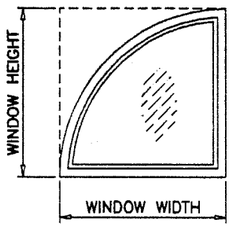

QUARTER ROUND

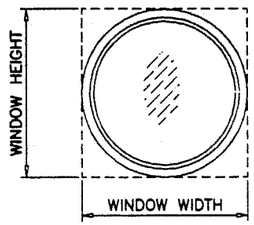

FULL ROUND

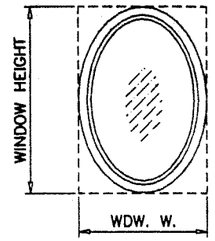

OVAL

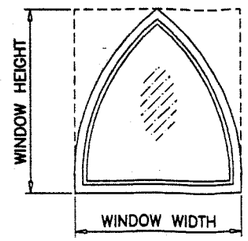

GOTHIC HEAD

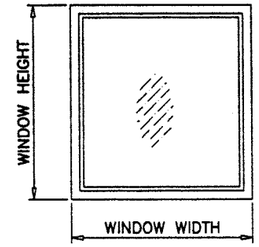

RECTANGLE

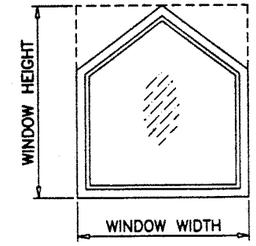

PENTAGON

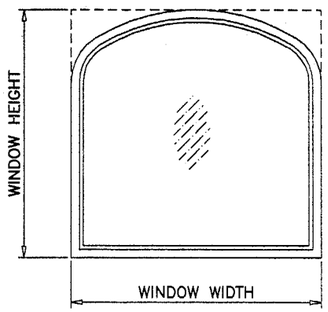

ELLIPTICAL ARCH

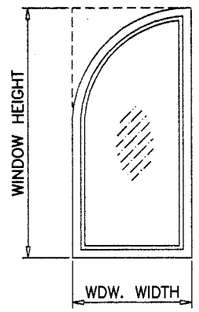

QUARTER RADIUS

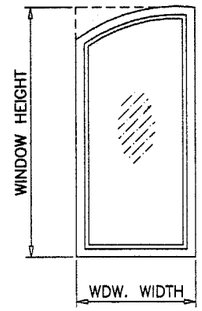

QUARTER SEGMENT

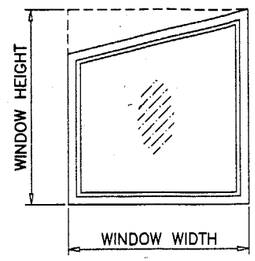

TRAPEZOID

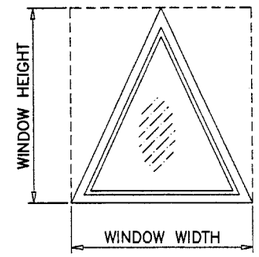

TRIANGLE

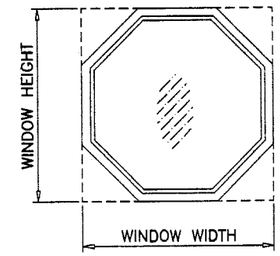

OCTAGON

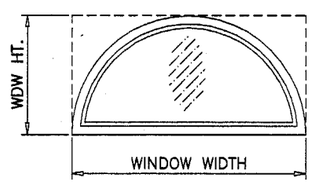

ROUND TOP

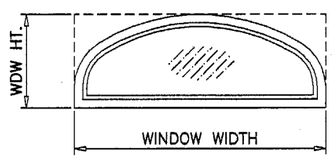

ELLIPTICAL TOP

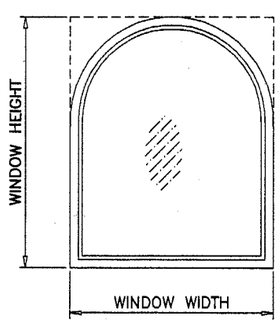

STANDING ARCH

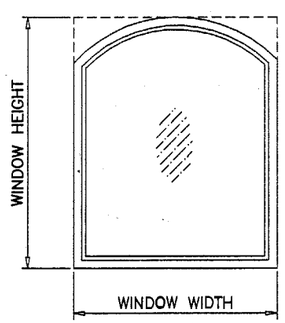

SEGMENT HEAD

GEOMETRIC SHAPES AS SHOWN CAN BE CHECKED BY INSCRIBING WITHIN A RECTANGLE AS SHOWN IN DOTTED LINES AND USING THAT RECTANGULAR SHAPE TO ENTER CHARTS ON SHEETS 1 AND 2.

Engr: DR. HUMAYOUN FAROOQ
STRUCTURES
FLA. PE # 16557
C.A.N. 3538

JAN 28 2003

PRODUCT REVISED
as complying with the Florida Building Code
Acceptance No 03-0204.05
Expiration Date 11/30/06
By
Miami Dade Product Control Division

AL-FAROOQ CORPORATION
ENGINEERS, PLANNERS & PRODUCT DESIGN
1235 SW 87 AVE
MIAMI, FLORIDA 33174
TEL. (305) 264-8100 FAX. (305) 262-6978
COMP-ANL\W98-80CO

'CAR CLAD' WOOD FIXED WINDOW

CARADCO WOOD WINDOWS & PATIO DOORS
201 EVANS ROAD
RANTOUL, ILLINOIS 61866
TEL. (217) 893-4444 FAX (217) 893-0921

revisions:

no	date	by	description
C	10.19.02		NO CHANGE

date: 10-10-98
scale: 1/2" = 1"
dr. by: HAMID
chk. by:

drawing no.
W98-80

sheet 3 of 8

WOOD BUCKS NOT BY CARADCO, MUST SUSTAIN LOADS IMPOSED BY GLAZING SYSTEM AND TRANSFER THEM TO THE BUILDING STRUCTURE.

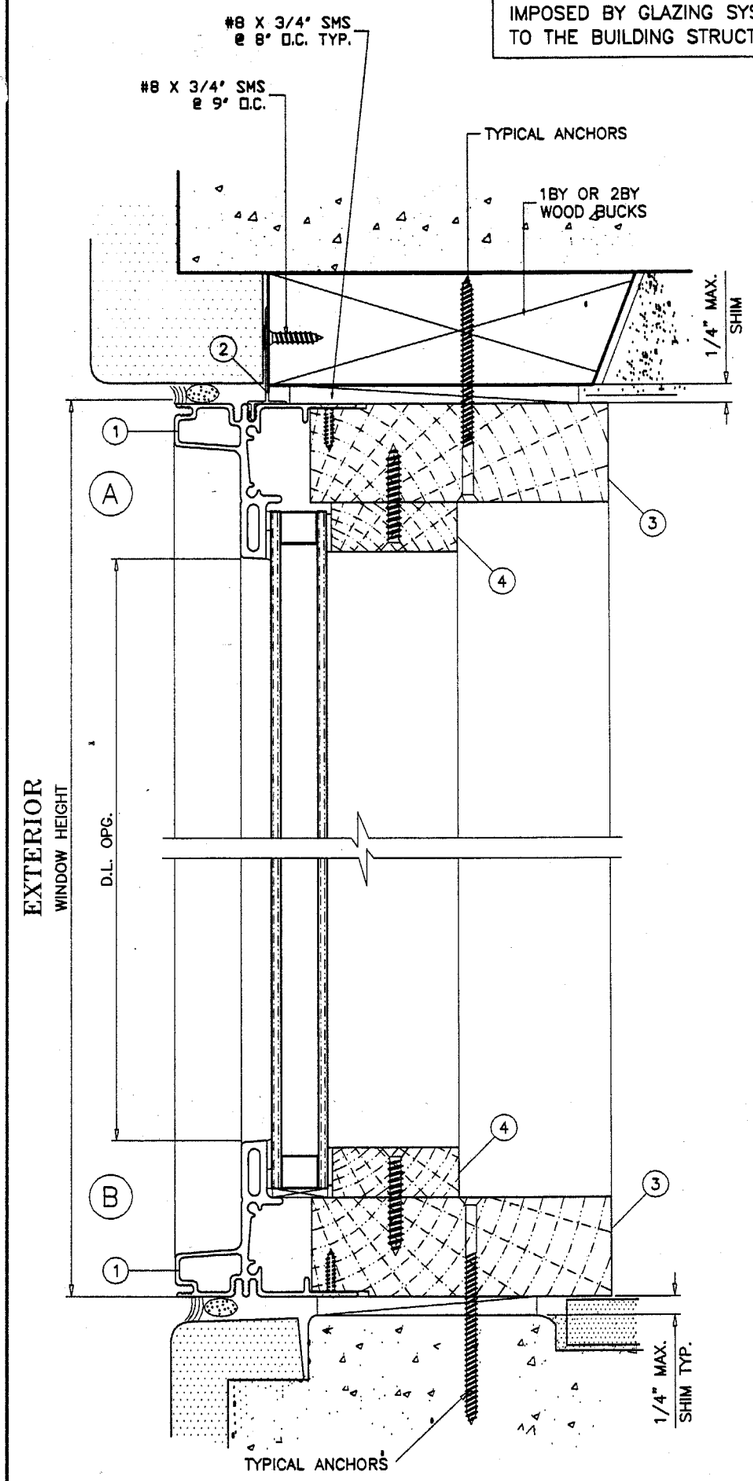

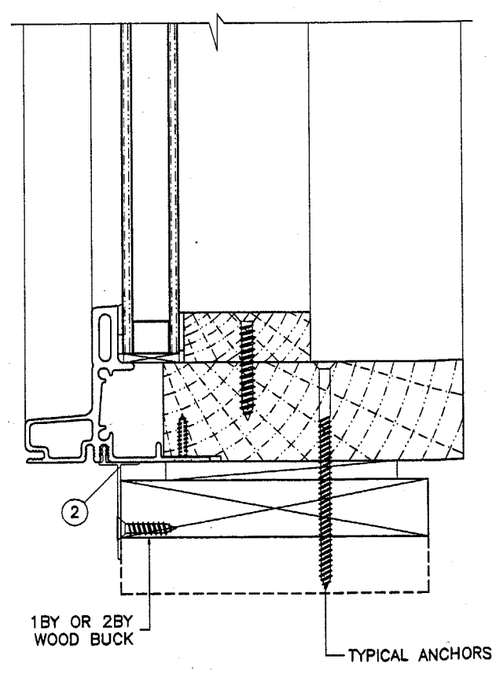

ITEM #	REQD.	PART #	DESCRIPTION	MATERIAL	MANF./SUPPLIER/REMARKS
1	AS REQD.	88614	FRAME NOSING	6063-T5	CARADCO
2	AS REQD.	88011-F	FRAME FIN	PVC	CARADCO
3	AS REQD.	88042-1	FRAME	WOOD	CARADCO
4	AS REQD.	-	GLAZING STOP	-	*
5	AS REQD.	-	SETTING BLOCK	NEOPRENE	1/8" X 3/4" X 6"
6	1/MULLION	PP25	MULLION CONNECTOR	6063-T5	CARADCO
7	AS REQD.	-	SINGLE SIDED GLAZING TAPE (1/16" X 1/2")	-	VOLARA
8	AS REQD.	-	DOUBLE SIDED GLAZING TAPE (1/16" X 1/4")	-	-
9	AS REQD.	-	SEALANT	SILICONE	NOVAFLEX SB

* .700 X 1.688 LAMINATED WESTERN PINE AT CURVED PORTIONS P.N. 82424-1
.656 X 1.688 WESTERN PINE AT STRAIGHT PORTIONS P.N. 88425-1

TYPICAL ANCHORS:

A) # 10 SMS OR 3/16" TAPCONS
INTO 2BY WOOD BUCKS OR WOOD STRUCTURE
1-3/8" MIN. PENETRATION INTO WOOD

B) 3/16" ø TAPCONS (BY ELCO) OR
EQUIV. CONC. ANCHOR HOLDING CURRENT NOTICE OF ACCEPTANCE.
THRU 1 BY WOOD BUCKS INTO MASONRY OR DIRECTLY INTO MASONRY
1-1/4" MIN. EMBED INTO CONC. OR MASONRY

SPACING:

AT 12", 18" OR 24" O.C. AS PER CHARTS.

NOTE: IMPACT RATED PRODUCTS SHALL USE 3/16" TAPCONS IN ALL CASES.

Engr: DR. HUMAYOUN FAROOQ
STRUCTURES
FLA. PE # 16557
C.A.N. 3538

JAN 28 2003

PRODUCT REVISED
as complying with the Florida Buiding Code
Acceptance No. 03-0204.05
Expiration Date 11/30/06
By Charlene Berman
Miami Dade Product Control Division

AL-FAROOQ CORPORATION
ENGINEERS, PLANNERS & PRODUCT DESIGN
1235 SW 87 AVE
MIAMI, FLORIDA 33174
TEL. (305) 264-8100 FAX. (305) 262-6978
COMP-ANL\W98-80CO

'CAR CLAD' WOOD FIXED WINDOW

CARADCO WOOD WINDOWS & PATIO DOORS
201 EVANS ROAD
RANTOUL, ILLINOIS 61866
TEL. (217) 893-4444 FAX (217) 893-0921

revisions:

no	date	by	description
C	10.19.02		NO CHANGE

date: 10-10-98
scale: 1/2" = 1"
dr. by: HAMID
chk. by:

drawing no. W98-80

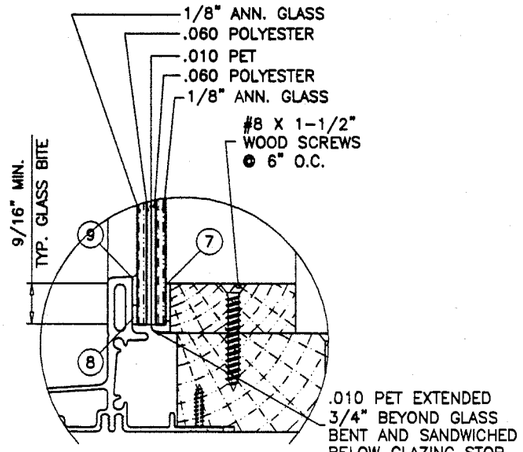

3/8" THICK NOMINAL
GLASSLAM SAFETY PLUS
GLASS TYPE '2'

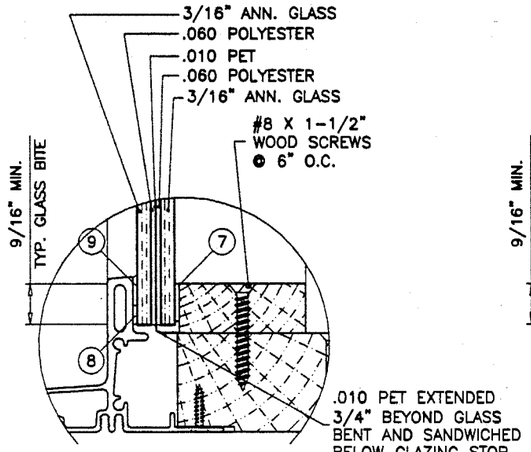

1/2" THICK NOMINAL
GLASSLAM SAFETY PLUS
GLASS TYPE '3'

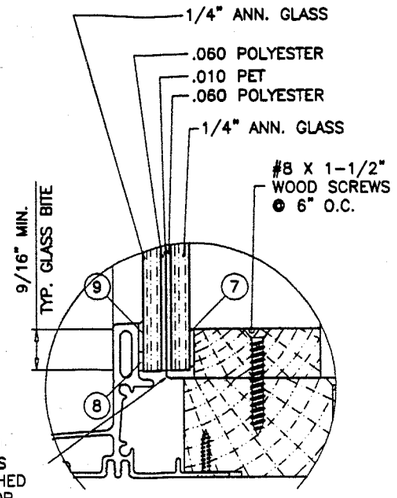

5/8" THICK NOMINAL
GLASSLAM SAFETY PLUS
GLASS TYPE '4'

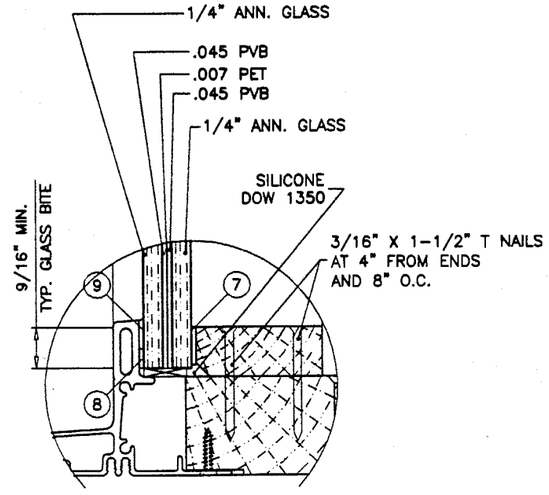

.545" THICK NOMINAL
CARDINAL SEASTORM
GLASS TYPE '5'

GLASS OPTIONS

NOTE: 3/16" 'T' NAILS IN PAIRS AS SHOWN ON GLASS TYPE '5' MAY BE USED AS AN ALTERNATE TO #8 SCREWS FOR ALL OTHER GLASS TYPES.

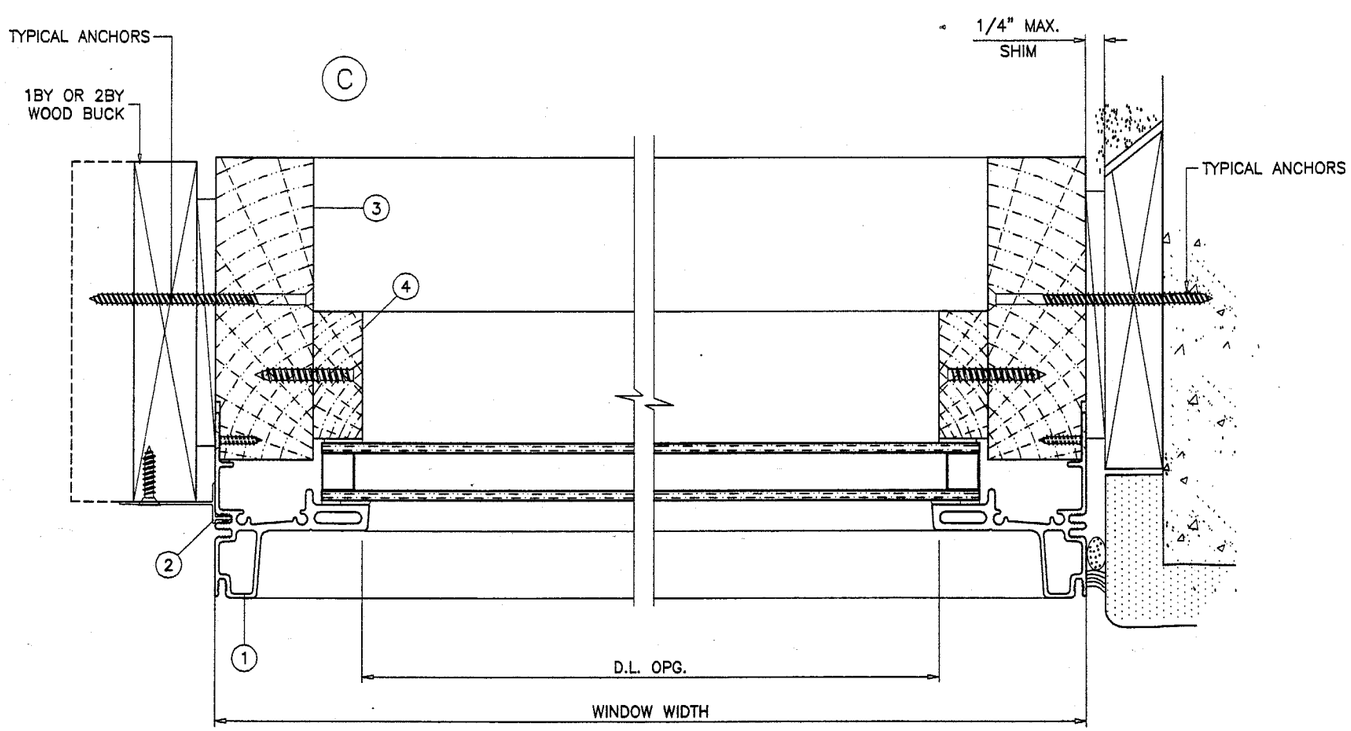

EXTERIOR

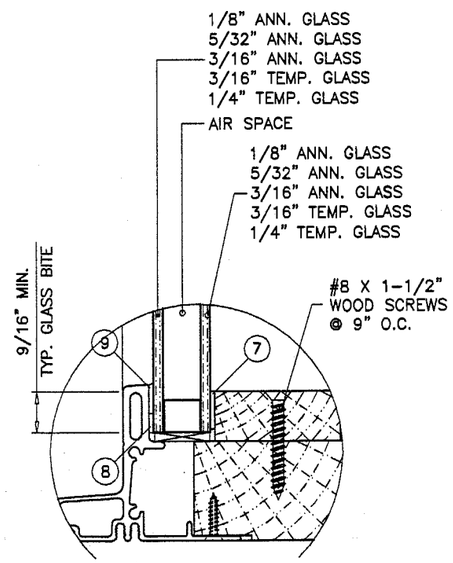

3/4" OVERALL INSULATED
NON-IMPACT GLASS

Engr: DR. HUMAYOUN FAROOQ
STRUCTURES
FLA. PE # 16557
C.A.N. 3538

JAN 2 8 2003

PRODUCT REVISED
as complying with the Florida Building Code
Acceptance No 03-0204.05
Expiration Date 11/30/06
By: Glenda Berman
Miami Dade Product Control Division

AL-FAROOQ CORPORATION
ENGINEERS, PLANNERS & PRODUCT DESIGN
1235 SW 87 AVE
MIAMI, FLORIDA 33174
TEL. (305) 264-8100 FAX. (305) 262-6978

COMP-ANL\W98-80CO

'CAR CLAD' WOOD FIXED WINDOW

CARADCO WOOD WINDOWS & PATIO DOORS
201 EVANS ROAD
RANTOUL, ILLINOIS 61866
TEL (217) 893-4444 FAX (217) 893-0921

revisions:

no	date	by	description
C	10.19.02	H	GLASS TYPE 5 & NOTE ADD.

date: 10-10-98
scale: 1/2" = 1"
dr. by: HAMID
chk. by:

drawing no.
W98-80

sheet 5 of 8

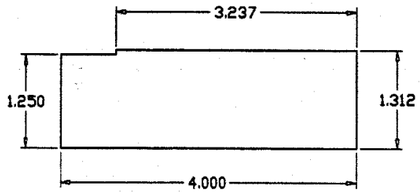

FRAME

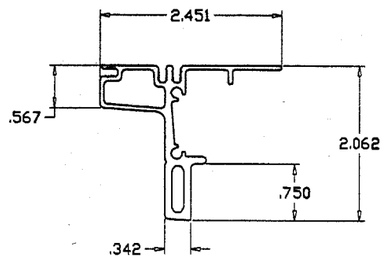

FRAME NOSING

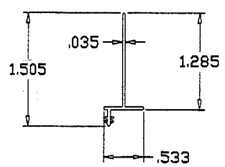

NAILING FIN

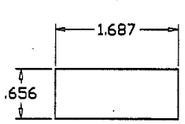

INSIDE TRIM
ALL GLASS TYPES EXCEPT #5

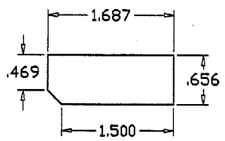

INSIDE TRIM
GLASS TYPE '5'

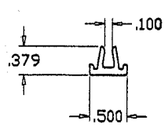

MULLION CONNECTOR

ALL WOOD COMPONENTS TO BE WHITE PINE OR PONDEROSA PINE.

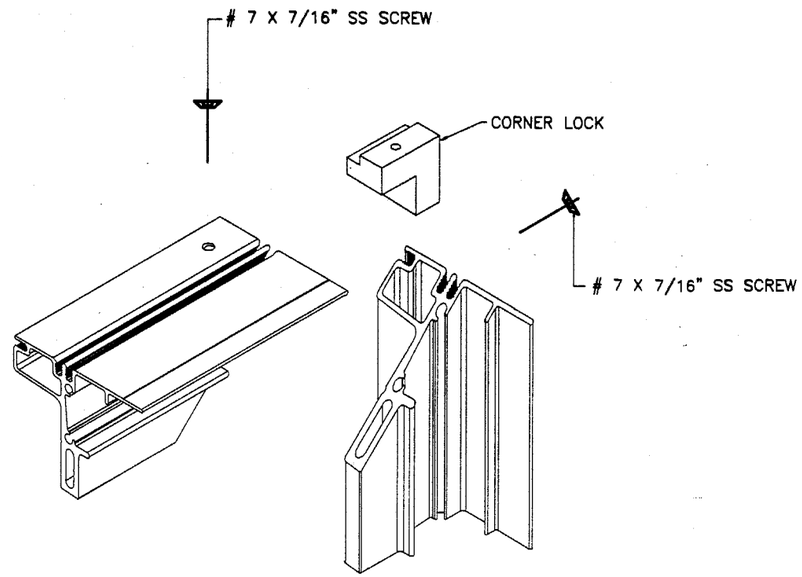

FRAME NOSING CORNER
90° CORNER SHOWN

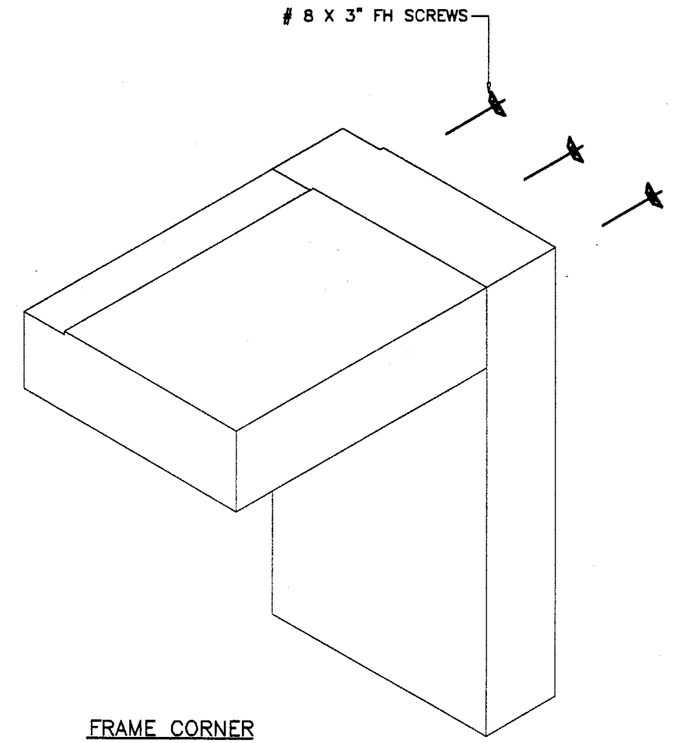

FRAME CORNER

FRAME CORNERS SEALED WITH BUTYL TAPE SEALANT (DEVAN # 269)
BUTYL CAULK USED IN BETWEEN ALUMINUM/WOOD JOINTS.

Engr: DR. HUMAYOUN FAROOQ
STRUCTURES
FLA. PE # 16557
C.A.N. 3538

JAN 2 8 2003

PRODUCT REVISED
as complying with the Florida Buiding Code
Acceptance No 03-0204.05
Expiration Date 11/30/06
By [signature]
Miami Dade Product Control Division

AL-FAROOQ CORPORATION
ENGINEERS, PLANNERS & PRODUCT DESIGN
1235 SW 87 AVE
MIAMI, FLORIDA 33174
TEL. (305) 264-8100 FAX. (305) 262-6978
COMP-ANL\W98-80CO

'CAR CLAD' WOOD FIXED WINDOW

CARADCO WOOD WINDOWS & PATIO DOORS
201 EVANS ROAD
RANTOUL, ILLINOIS 61866
TEL. (217) 893-4444 FAX (217) 893-0921

revisions:

no	date	by	description
C	10.19.02		INSIDE TRIM ADD. CORNER REV.

date: 10-10-98
scale: 1/2" = 1"
dr. by: HAMID
chk. by:

drawing no.
W98-80

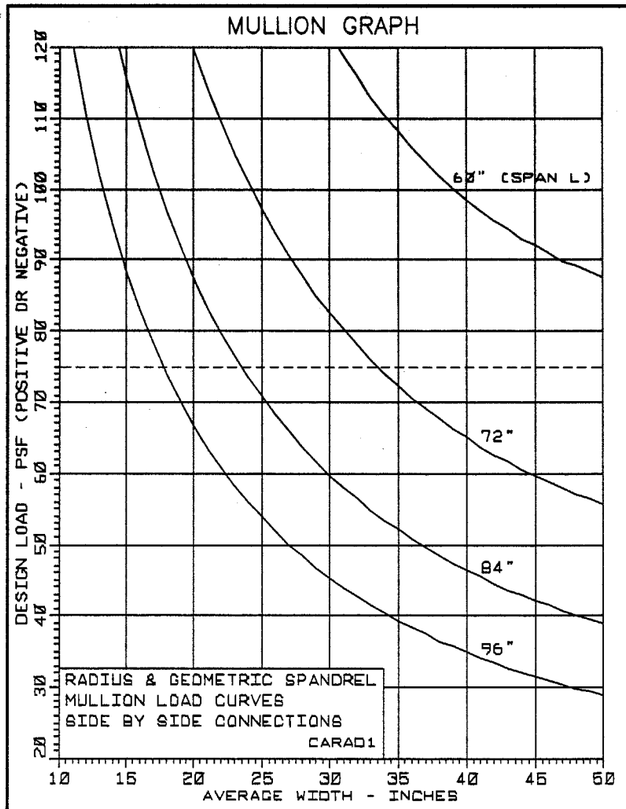

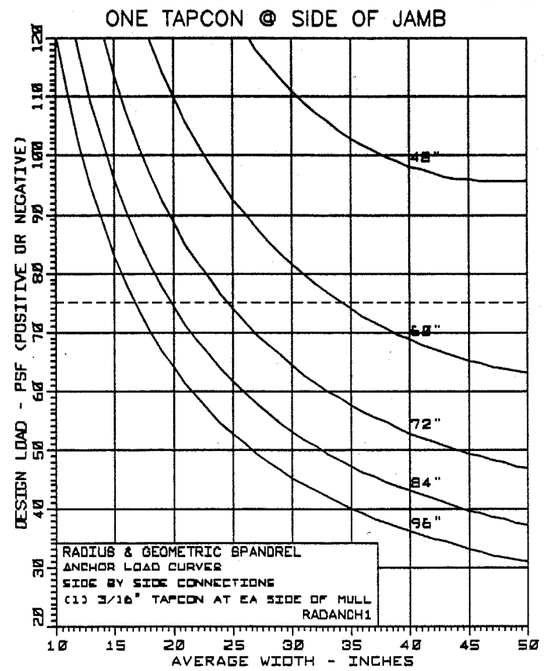

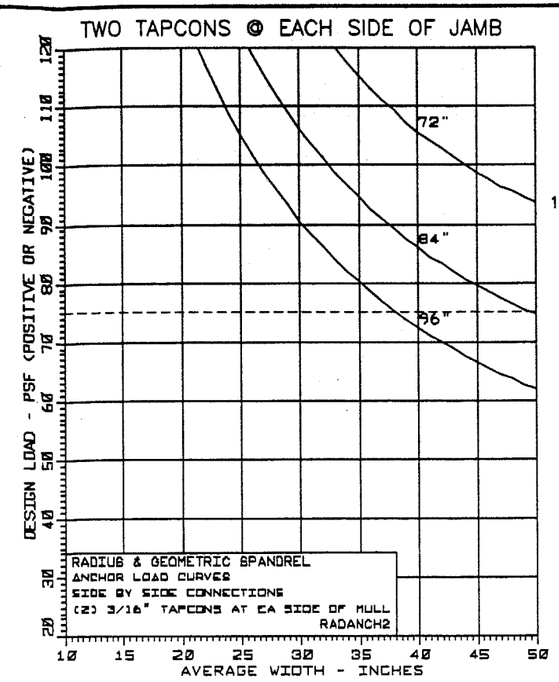

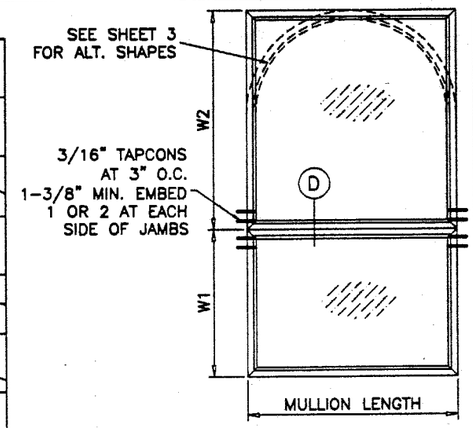

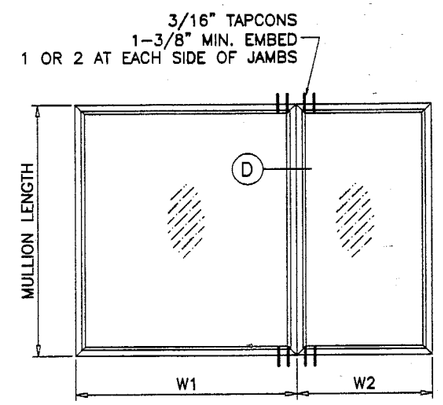

WINDOWS SIDE BY SIDE CONNECTIONS

THE CURVES ON THESE GRAPHS SHOWS MULLION LENGTHS
SEE SKETCH FOR REFERENCE

FOR IMPACT RATED PRODUCTS LIMIT MULLION OR ANCHOR LOAD CAPACITY TO 75 PSF

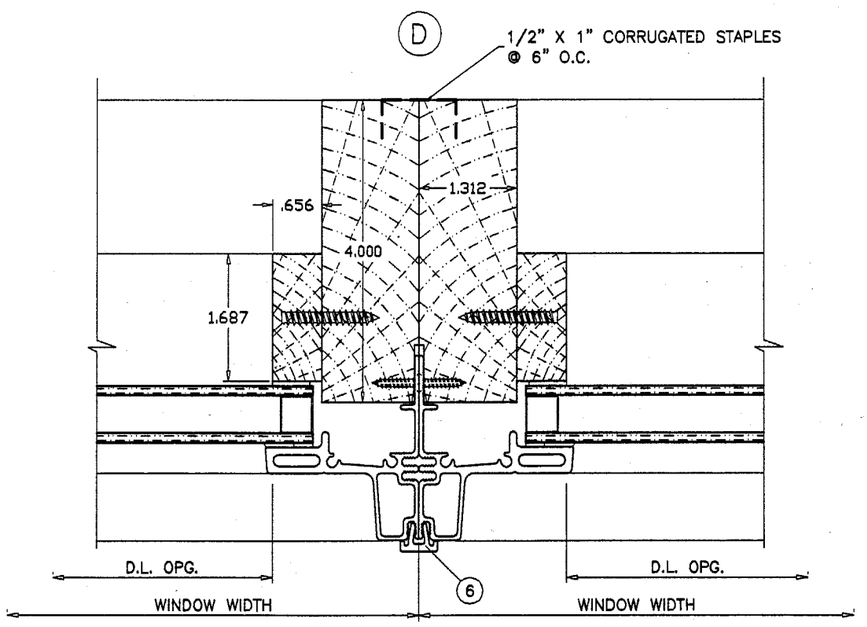

EXTERIOR
VERTICAL OR HORIZONTAL SECTION

TYPICAL ELEVATIONS
SIDE BY SIDE WINDOWS
SIDE BY SIDE APPLIES TO TWO OR MORE WINDOWS

$$\text{AVG. WIDTH} = \frac{W1 + W2}{2}$$

NOTES:

1. USE GRAPH ON THIS SHEET FOR SIDE BY SIDE CONNECTION CAPACITY OF FIXED WINDOW MULLION.
2. FOR FIXED WINDOW CAPACITY SEE SHEET 1 AND 2.
3. USE SMALLER DESIGN LOAD CAPACITY OF 1 OR 2 ABOVE.

Engr: DR. HUMAYOUN FAROOQ
STRUCTURES
FLA. PE # 16557
C.A.N. 3538

JAN 28 2003

PRODUCT REVISED
as complying with the Florida Buiding Code
Acceptance No. 03-0204.05
Expiration Date 11/30/06
By Theodore Berman
Miami Dade Product Control Division

AL-FAROOQ CORPORATION
ENGINEERS, PLANNERS & PRODUCT DESIGN
1235 SW 87 AVE
MIAMI, FLORIDA 33174
TEL. (305) 264-8100 FAX. (305) 262-6978
COMP-ANL\W98-80CO

'CAR CLAD' WOOD FIXED WINDOW

CARADCO WOOD WINDOWS & PATIO DOORS
201 EVANS ROAD
RANTOUL, ILLINOIS 61866
TEL. (217) 893-4444 FAX (217) 893-0921

revisions:

no	date	by	description
A	06.09.99	H	MULLION DIMS. ADDED
C	10.19.02		NO CHANGE

date: 10-10-98
scale: 1/2" = 1"
dr. by: HAMID
chk. by:

drawing no. W98-80

sheet 7 of 8

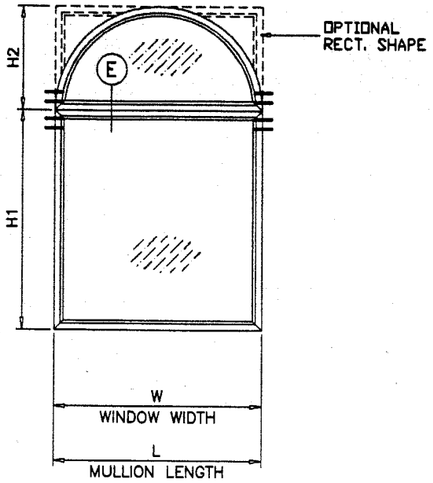

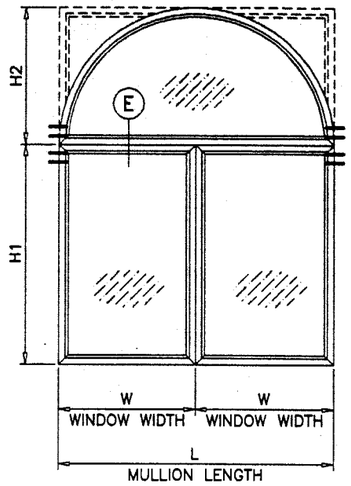

STRUCTURAL CAPACITY - PSF					
WINDOW SIZE				COMBINATION	
W	L	H1	H2	1A	1AX
17"	17"	30"	10.5"	100.0	100.0
UPTO					
40"	40"	30"	22"	76.8	100.0
		36"			
		48"			
		60"			
		72"			
48"	48"	30"	26"	44.7	65.0
		36"			
		48"			
		60"			
		72"			

STRUCTURAL CAPACITY - PSF					
WINDOW SIZE				COMBINATION	
W	L	H1	H2	1A	1AX
17"	34"	30"	19"	100.0	100.0
		36"		94.0	100.0
		48"		77.2	100.0
		60"		65.4	95.0
		72"		56.8	82.5
20"	40"	30"	22"	71.8	100.0
		36"		64.4	93.5
		48"		53.4	77.5
		60"		45.6	66.2
		72"		39.7	57.7
24"	48"	30"	26"	46.3	67.3
		36"		41.8	60.8

FOR IMPACT RATED PRODUCTS LIMIT MULLION OR ANCHOR LOAD CAPACITY TO 75 PSF

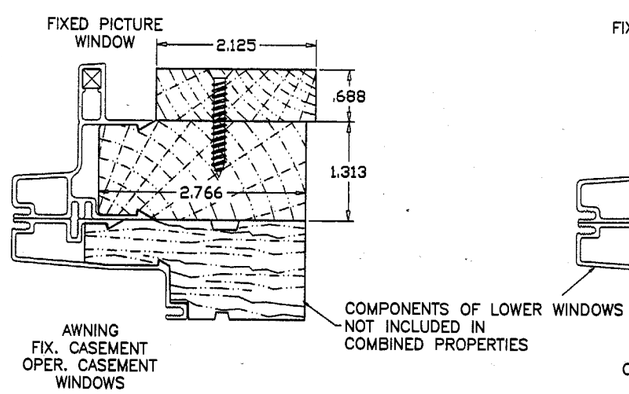

COMBINATION '1A'

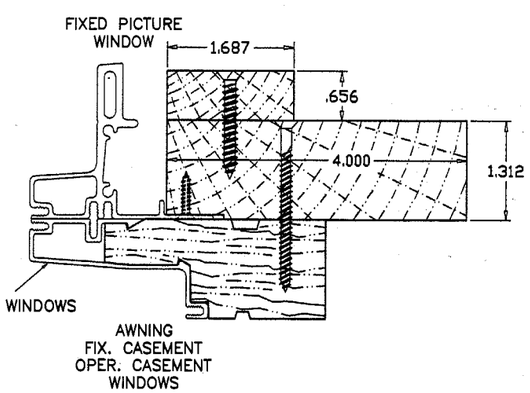

COMBINATION '1AX'

COMPONENTS OF LOWER WINDOWS NOT INCLUDED IN COMBINED PROPERTIES

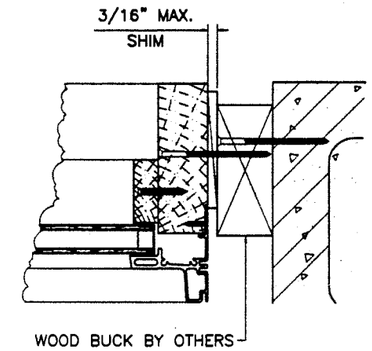

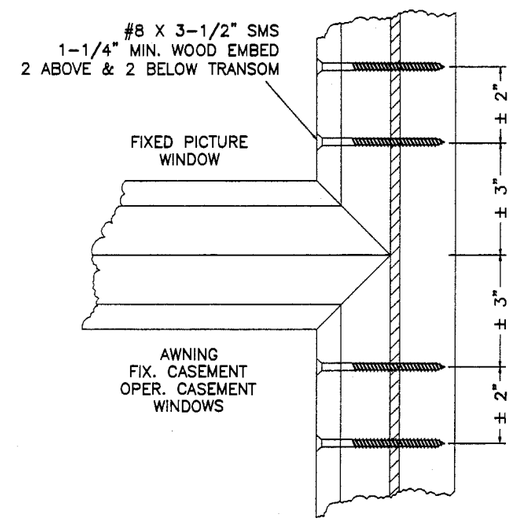

MULLION ANCHOR DETAIL

Engr: DR. HUMAYOUN FAROOQ
STRUCTURES
FLA. PE # 16557
C.A.N. 3538

JAN 2 8 2003

PRODUCT REVISED
as complying with the Florida Buiding Code
Acceptance No 03-0204.05
Expiration Date 11/30/06
By Theodore Berman
Miami Dade Product Control Division

AL-FAROOQ CORPORATION
ENGINEERS, PLANNERS & PRODUCT DESIGN
1235 SW 87 AVE
MIAMI, FLORIDA 33174
TEL. (305) 264-8100 FAX. (305) 262-6978
COMP-ANL\W98-80CO

'CAR CLAD' WOOD FIXED WINDOW

CARADCO WOOD WINDOWS & PATIO DOORS
201 EVANS ROAD
RANTOUL, ILLINOIS 61866
TEL. (217) 893-4444 FAX (217) 893-0921

revisions:

no	date	by	description
A	06.09.99	H	MULLION DIMS. ADDED
C	10.19.02		NO CHANGE

date: 10-10-98
scale: 1/2" = 1"
dr. by: HAMID
chk. by:

drawing no.
W98-80

sheet 8 of 8