MIAMI-DADE

BUILDING CODE COMPLIANCE OFFICE (BCCO)
PRODUCT CONTROL DIVISION

MIAMI-DADE COUNTY, FLORIDA
METRO-DADE FLAGLER BUILDING
140 WEST FLAGLER STREET, SUITE 1603
MIAMI, FLORIDA 33130-1563
(305) 375-2901 FAX (305) 375-2908

NOTICE OF ACCEPTANCE (NOA)

Plaza Door Company, Inc.
P.O. Box 4304
West Palm Beach, FL 33402

SCOPE:
This NOA is being issued under the applicable rules and regulations governing the use of construction materials. The documentation submitted has been reviewed by Miami-Dade County Product Control Division and accepted by the Board of Rules and Appeals (BORA) to be used in Miami Dade County and other areas where allowed by the Authority Having Jurisdiction (AHJ).

This NOA shall not be valid after the expiration date stated below. The Miami-Dade County Product Control Division (In Miami Dade County) and/or the AHJ (in areas other than Miami Dade County) reserve the right to have this product or material tested for quality assurance purposes. If this product or material fails to perform in the accepted manner, the manufacturer will incur the expense of such testing and the AHJ may immediately revoke, modify, or suspend the use of such product or material within their jurisdiction. BORA reserves the right to revoke this acceptance, if it is determined by Miami-Dade County Product Control Division that this product or material fails to meet the requirements of the applicable building code.

This product is approved as described herein, and has been designed to comply with the High Velocity Hurricane Zone of the Florida Building Code.

DESCRIPTION: Series "Titan XI" Aluminum Sliding Glass Door-S.M.

APPROVAL DOCUMENT: Drawing No. **1172,** titled "Titan "XI" Small Missile Impact Sliding Glass Doors", sheets 1 through 4 of 4, prepared by W.W. Schaefer Engineering & Consulting, P.A., dated 9/24/02, signed and sealed by Warren Schaefer, P.E., bearing the Miami-Dade County Product Control Approval stamp with the Notice of Acceptance number and approval date by the Miami-Dade County Product Control Division.

MISSILE IMPACT RATING: Small Missile Impact

LABELING: Each unit shall bear a permanent label with the manufacturer's name or logo, city, state and following statement: "Miami-Dade County Product Control Approved", unless otherwise noted herein.

RENEWAL of this NOA shall be considered after a renewal application has been filed and there has been no change in the applicable building code negatively affecting the performance of this product.

TERMINATION of this NOA will occur after the expiration date or if there has been a revision or change in the materials, use, and/or manufacture of the product or process. Misuse of this NOA as an endorsement of any product, for sales, advertising or any other purposes shall automatically terminate this NOA. Failure to comply with any section of this NOA shall be cause for termination and removal of NOA.

ADVERTISEMENT: The NOA number preceded by the words Miami-Dade County, Florida, and followed by the expiration date may be displayed in advertising literature. If any portion of the NOA is displayed, then it shall be done in its entirety.

INSPECTION: A copy of this entire NOA shall be provided to the user by the manufacturer or its distributors and shall be available for inspection at the job site at the request of the Building Official.
This NOA consists of this page 1 as well as approval document mentioned above.
The submitted documentation was reviewed by **Theodore Berman, P.E.**

PRODUCT CONTROL ACCEPTED

NOTICE OF ACCEPTANCE: EVIDENCE SUBMITTED
(For File ONLY. Not part of NOA)

E. STATEMENTS

1. Statement letter of conformance, dated 10/24/02, signed and sealed by Warren Schaefer, P.E.
2. Statement letter of no financial interest, dated 10/24/02, signed and sealed by Warren Schaefer, P.E.
3. Laboratory compliance letter for Test Report no. HTL01055, issued by Hurricane Test Laboratory, Inc., dated 8/23/01, signed and sealed by Vinu J. Abraham, P.E.
4. Addendum letter from Hurricane Test Laboratory, dated 2/28/03, to clarify the material thickness and heat treatment used. These clarifications are being made in sections 6.1 and 6.2 of the test reports.

F. OTHER

1. Letter from consultant stating that the product is in compliance with the Florida Building Code (FBC)

Theodore Berman, P.E.
Deputy Director, Product Control Division
NOA No 03-0206.02
Expiration Date: April 17, 2008
Approval Date: April 17, 2003

Plaza Door Company, Inc.

NOTICE OF ACCEPTANCE: EVIDENCE SUBMITTED

(For File ONLY. Not part of NOA)

A. DRAWINGS

1. Manufacturer's die drawings and sections.
2. Drawing No. **1172,** titled "Titan "XI" Small Missile Impact Sliding Glass Doors", sheets 1 through 4 of 4, prepared by W.W. Schaefer Engineering & Consulting, P.A., dated 9/24/02, signed and sealed by Warren Schaefer, P.E.

B. TESTS

1. Test reports on1)Uniform Static Air Pressure Test, Loading per FBC, TAS 202-94
   2) Large Missile Impact Test per FBC, TAS 201-94
   3) Cyclic Wind Pressure Loading per FBC, TAS 203-94

   along with marked-up drawings and installation diagram of an aluminum sliding glass door, prepared by Hurricane Test Laboratory, Test Report No. HTL 0171-0619.01 dated 7/3/01, signed and sealed by Vinu J. Abraham, P.E.
2. Test reports on1)Uniform Static Air Pressure Test, Loading per FBC, TAS 202-94
   2) Air Infiltration Test, per FBC, TAS 202-94
   3) Water Resistance Test, per FBC, TAS 202-94
   4) Large Missile Impact Test per FBC, TAS 201-94
   5) Cyclic Wind Pressure Loading per FBC, TAS 203-94
   6) Forced Entry Test, per FBC 2411 3.2.1 and TAS 202-94

   along with marked-up drawings and installation diagram of an aluminum sliding glass door, prepared by Hurricane Test Laboratory, Inc., Test Report No. HTL 0171-0617.98 dated 8/11/98, signed and sealed by Timothy Marshall, P.E.

C. CALCULATIONS

1. Anchor Calculations and structural analysis, prepared by W.W. Schaefer Engineering & Consulting, P.A., dated 9/30/02, signed and sealed by Warren Schaefer, P.E.

D. MATERIAL CERTIFICATIONS

1. Notice of Acceptance No. **02-0828.15** issued to E.I. DuPont DeNemours for "Dupont Butacite ® PVB" dated 11/21/02, expiring on 12/11/05.

Theodore Berman, P.E.
Deputy Director, Product Control Division
NOA No 03-0206.02
Expiration Date: April 17, 2008
Approval Date: April 17, 2003

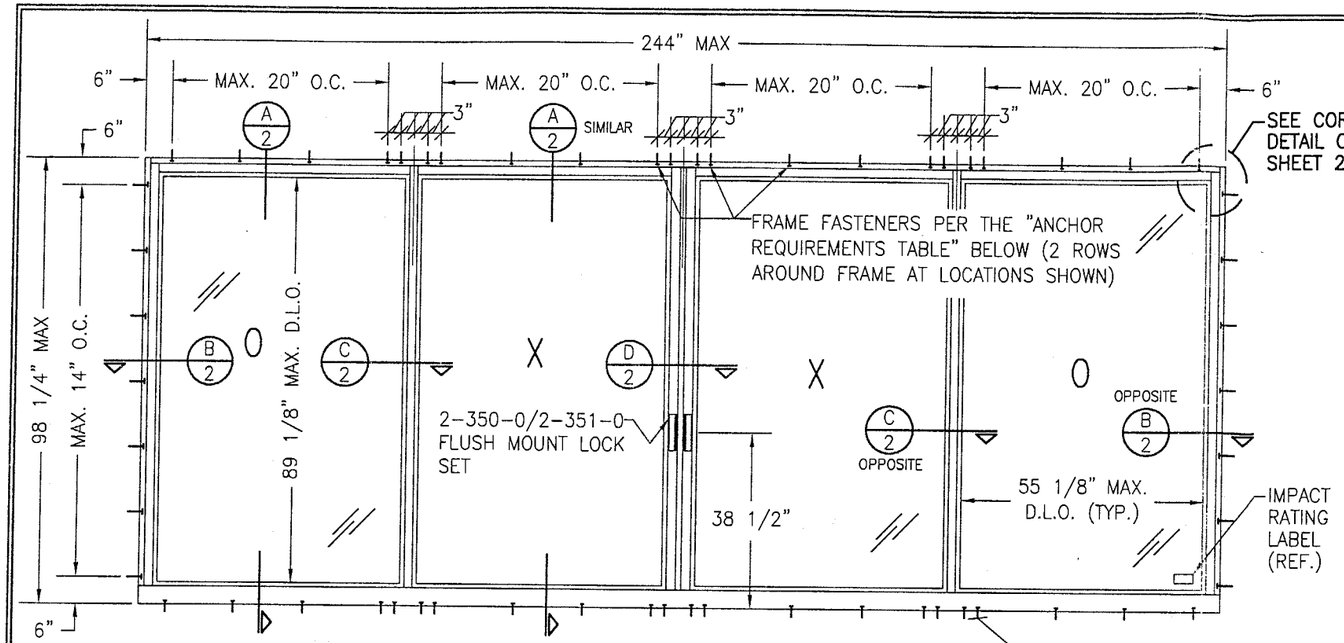

INTERIOR ELEVATION OF 4 PANEL UNIT

SCALE=3/8"=1'-0"

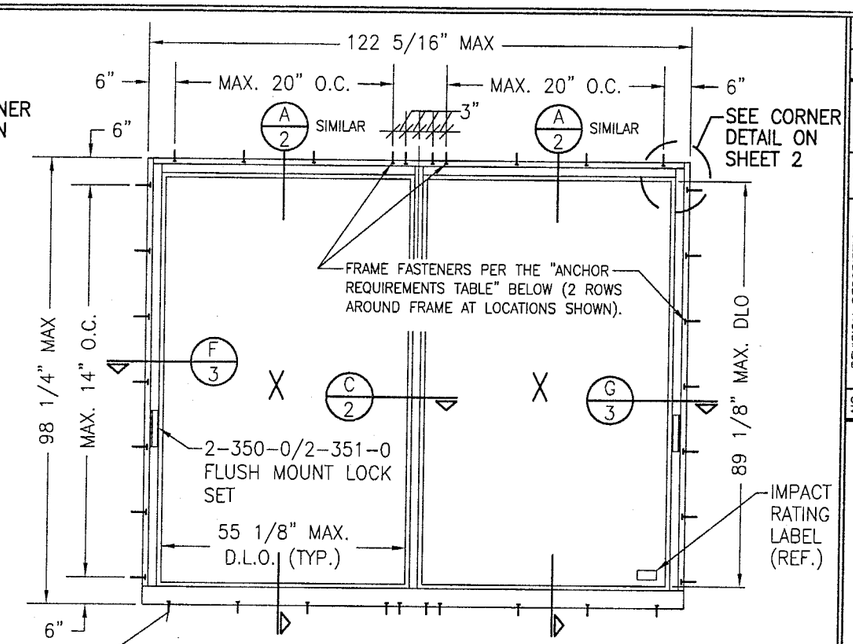

INTERIOR ELEVATION OF 2 PANEL UNIT

SCALE=3/8"=1'-0"

MAX. PANEL SIZE FOR ALL DOORS = 61 7/16" X 97"

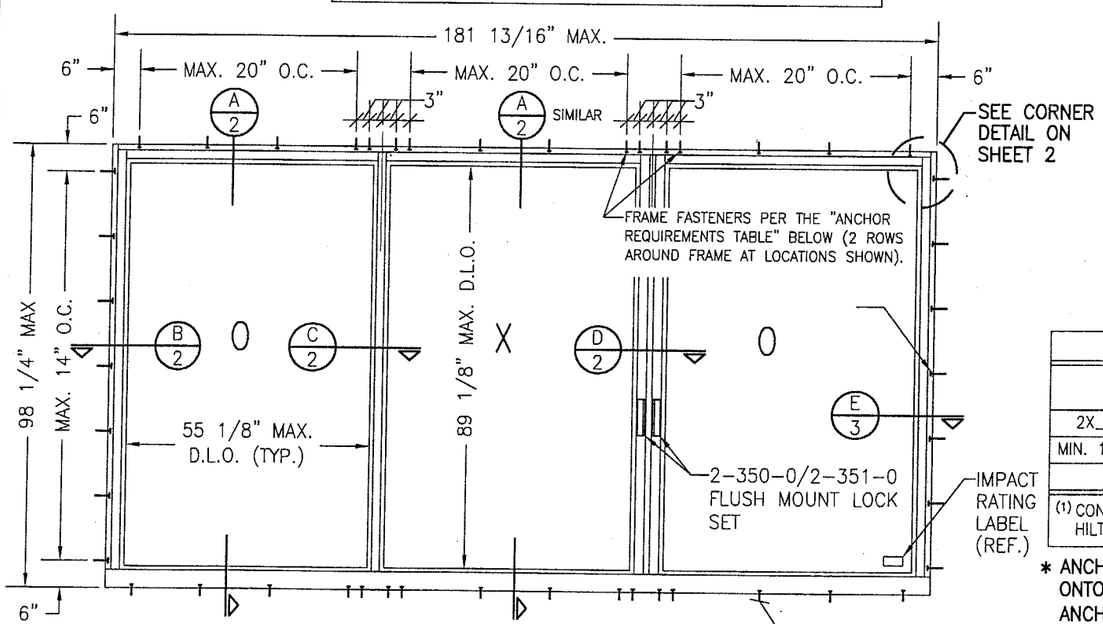

INTERIOR ELEVATION OF 3 PANEL UNIT

SCALE=3/8"=1'-0"

GENERAL NOTES

1. THESE DOOR SYSTEMS HAVE BEEN TESTED, ANALYZED AND APPROVED FOR DESIGN PRESSURES NOT TO EXCEED THOSE SHOWN IN THE "ALLOWABLE DESIGN LOADS" TABLE.
2. BUCKING OPENINGS & BUCKING FASTENERS MUST BE PROPERLY DESIGNED & INSTALLED TO TRANSFER WIND LOADS TO THE STRUCTURE.
3. ALL HARDWARE & FASTENERS SHALL BE IN ACCORDANCE WITH THESE DRAWINGS & MAY NOT VARY UNLESS SPECIFICALLY MENTIONED ON THE DRAWINGS.
4. THE DETAILS & SPECIFICATIONS SHOWN HEREIN REPRESENT THE PRODUCTS TESTED & PROPOSED FOR WATER, AIR, IMPACT, CYCLIC & UNIFORM STATIC AIR PRESSURE TESTING IN CONFORMANCE WITH STATE PROTOCOLS TAS 201, 202 & 203 FOR SMALL MISSILE IMPACT DOORS.
5. THESE DOOR SYSTEMS HAVE BEEN DESIGNED IN ACCORDANCE WITH THE FLORIDA BUILDING CODE (FBC).
6. THESE SMALL MISSLE APPROVED IMPACT DOORS MUST BE SHUTTERED WHEN INSTALLED AT LOCATIONS WHERE THE DOOR SILL ELEVATION IS 30 FT. OR LESS ABOVE ESTABLISHED GRADE.
7. ALL ANCHORS SHALL BE INSTALLED AS SPECIFIED ON THESE DRAWINGS. SPECIFIED EMBEDMENT TO BASE MATERIAL SHALL BE BEYOND WALL FINISH OR STUCCO.
8. THIS PRODUCT MAY BE USED AS A DOOR OR WINDOW.
9. ANY COMBINATION OF ACTIVE/FIXED PANELS MAY BE USED IN THE ELEVATIONS SHOWN.

* FRAME ANCHOR REQUIREMENTS TABLE

OPENING TYPE (SUBSTRATE)	JAMB TO OPENING FASTENER TYPE	MINIMUM EMBEDMENT	MINIMUM EDGE DIST.
2X_ WOOD FRAME OR BUCK	NO. 10 SMS SCREW	1 3/8"	3/4"
MIN. 18 GA. 33 KSI METAL STUD	NO. 10 SMS SCREW	FULL	3/8"
CMU/CONCRETE	(1)3/16" CONCRETE SCREWS	1 1/4"	1 3/4"

(1) CONCRETE SCREWS SHALL BE ITW RAMSET/RED HEAD TAPCONS, ELCO TAPCONS, HILTI KWIK-CON II OR POWERS RAWL TAPPER (HARDENED STEEL OR S.S.).

* ANCHOR NOTE: FRAME MAY BE EITHER DIRECT MOUNTED TO THE OPENING, MOUNTED ONTO A CONTINUOUS SPACER, ANCHORED TO A MIN. 18 GA. 33 KSI METAL STUD OR ANCHORED TO A MIN 2X6 NO. 3 SOUTHERN PINE WOOD BUCK/FRAMING. WHEN ANCHORED TO 2X_ WOOD OR A METAL STUD, NO 10 SCREWS SHALL BE USED. WHEN MOUNTED TO BLOCK/CONCR., 3/16" CONCRETE SCREWS SHALL BE USED. SEE "ANCHOR REQUIREMENTS TABLE" FOR EMBED REQUIREMENTS. PROPER MATERIAL SHALL BE USED BETWEEN ALL DISIMILAR MATERIALS (BLOCK/CONCRETE & ALUMINUM).

MAXIMUM ALLOWABLE DESIGN PRESSURE	
POSSITVE	NEGATIVE
88 PSF	88 PSF
TYP. AT ALL UNITS	

Approved as complying with the Florida Buiding Code
Date 04/17/03
NOA# 03-0206.02
Miami Dade Product Control Division
By Gheordre Berman

DRAWN BY: W.W.S.	CHECKED BY: W.W.S.
PLOT: 1=32	DATE: 09/24/02

NO.	REVISION DESCRIPTION	BY	DATE

DRAWING TITLE: TITAN "XI" SMALL MISSILE IMPACT SLIDING GLASS DOORS

MANUFACTURER: PLAZA DOOR CO., INC.
P.O. BOX 4304
WEST PALM BEACH, FL 33402
561-842-6511

CONSULTANTS: W. W. SCHAEFER ENGINEERING & CONSULTING, P.A.
600 SANDTREE DRIVE; SUITE 203B
PALM BEACH GARDENS, FL 33403
PHONE: 561-775-4902 FAX: 561-775-4903

CERTIFICATION: FEB 27 2003
WARREN W. SCHAEFER, P.E.
P.E. NO. 44135

DRAWING NO. 1172 REV.

SHEET NO. 1 OF 4

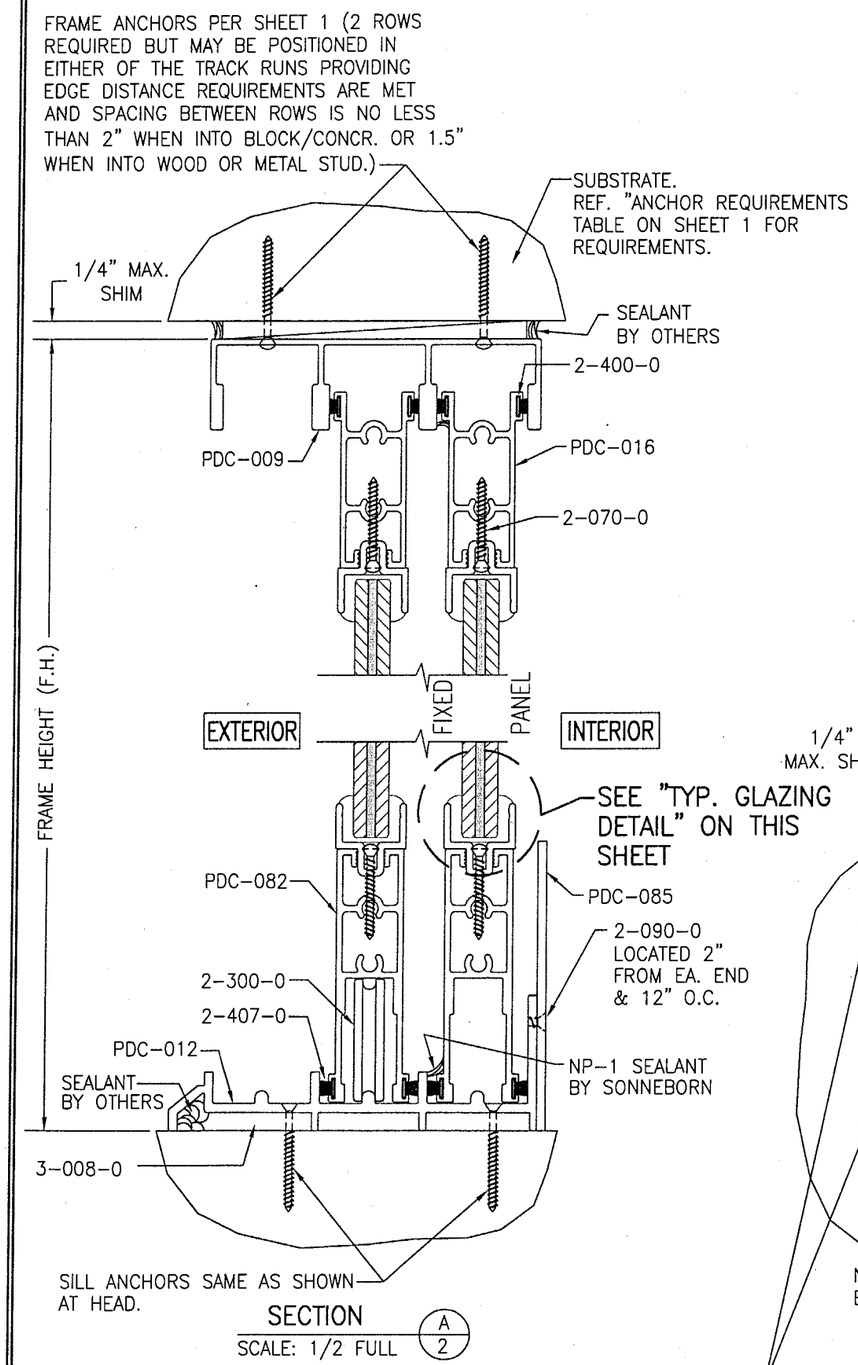

SECTION A/2
SCALE: 1/2 FULL

TRACK DRAINAGE: 3/8" DIA. WEEP HOLES 17" FROM EACH END & 21" O.C. AT EA. TRACK RUN PLUS 1/8" X 1 1/2" SLOT IN VERTICAL LEG AT EA. WEEP HOLE LOCATION FOR DRAINAGE TO PAN & EXIT.

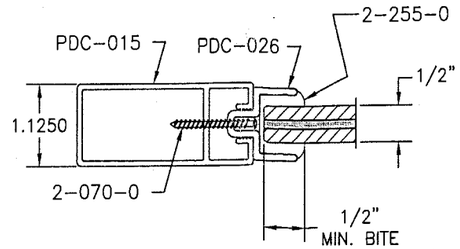

TYP. GLAZING DETAIL

GLAZING) 1/2" THICK DUPONT BUTACITE LAMINATED GLASS (1/4" TEMP INTERIOR PANE/0.060 PVB/3/16" HT. STR. EXTERIOR PANE)

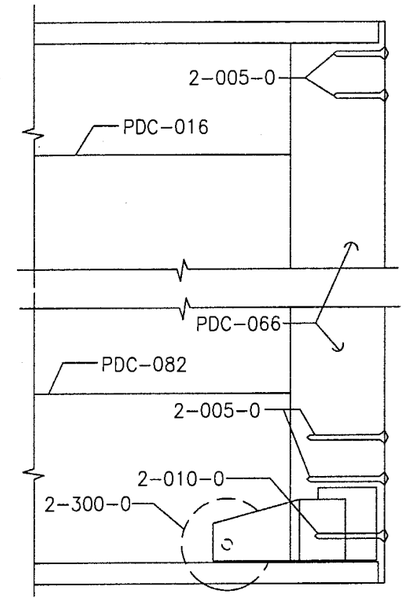

TYP. DOOR PANEL CORNER DETAIL

SCALE=N.T.S.

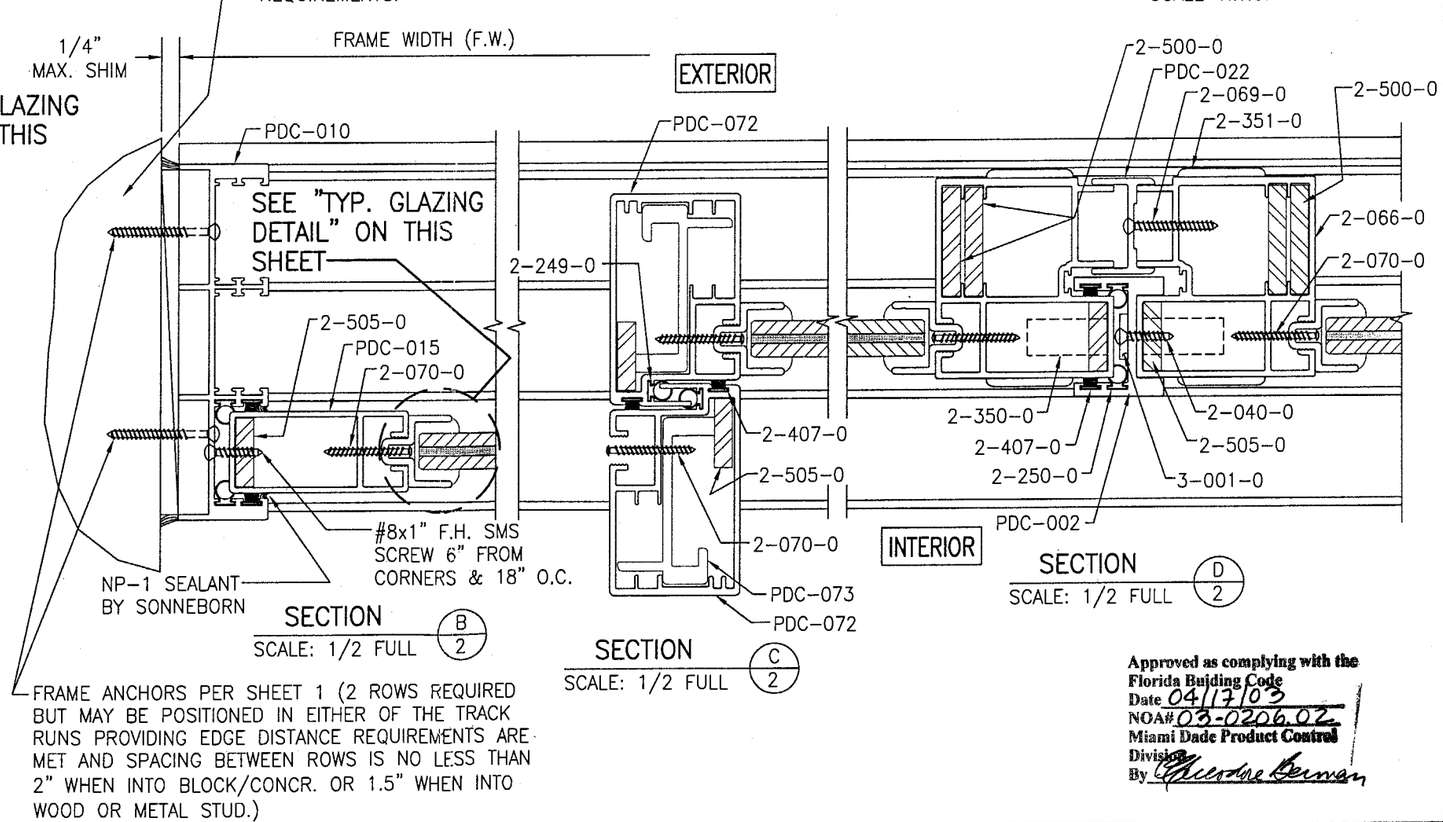

SECTION B/2
SCALE: 1/2 FULL

SECTION C/2
SCALE: 1/2 FULL

SECTION D/2
SCALE: 1/2 FULL

FRAME ANCHORS PER SHEET 1 (2 ROWS REQUIRED BUT MAY BE POSITIONED IN EITHER OF THE TRACK RUNS PROVIDING EDGE DISTANCE REQUIREMENTS ARE MET AND SPACING BETWEEN ROWS IS NO LESS THAN 2" WHEN INTO BLOCK/CONCR. OR 1.5" WHEN INTO WOOD OR METAL STUD.)

Approved as complying with the Florida Buiding Code
Date 04/17/03
NOA# 03-0206.02
Miami Dade Product Control Division
By Lucille Berman

DRAWN BY: W.W.S.	CHECKED BY: W.W.S.
PLOT: 1=32	DATE: 09/24/02

NO.	REVISION DESCRIPTION	BY	DATE

DRAWING TITLE: TITAN "XI" SMALL MISSILE IMPACT SLIDING GLASS DOORS

MANUFACTURER: PLAZA DOOR CO., INC. P.O. BOX 4304 WEST PALM BEACH, FL 33402 561-842-6511

CONSULTANTS: W. W. SCHAEFER ENGINEERING & CONSULTING, P.A. 600 SANDTREE DRIVE, SUITE 203B PALM BEACH GARDENS, FL 33403 PHONE: 561-775-4902 FAX: 561-775-4903

CERTIFICATION: FEB 27 2003 WARREN W. SCHAEFER, P.E. P.E. NO. 44135

DRAWING NO. 1172 REV.

SHEET NO. 2 OF 4

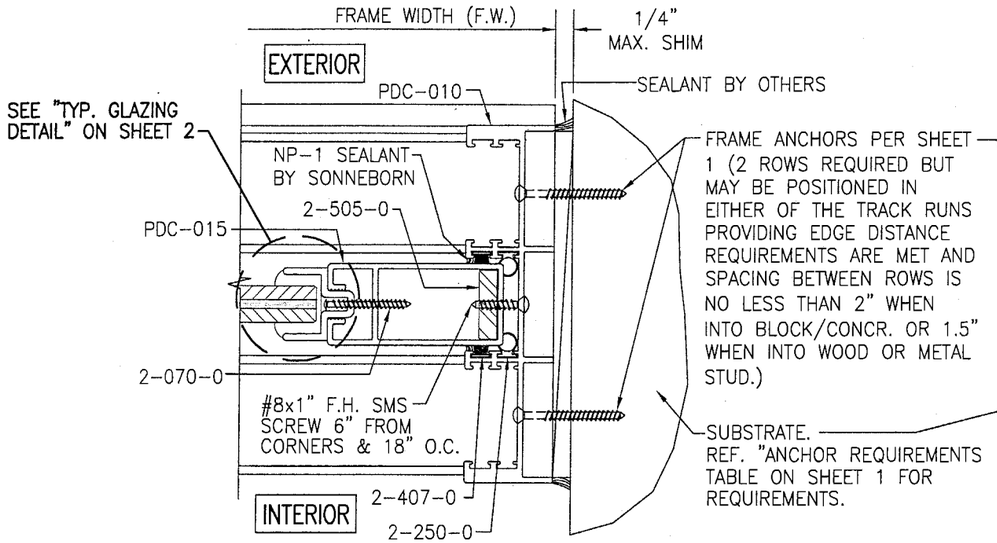

SECTION E/3
SCALE: 1/2 FULL

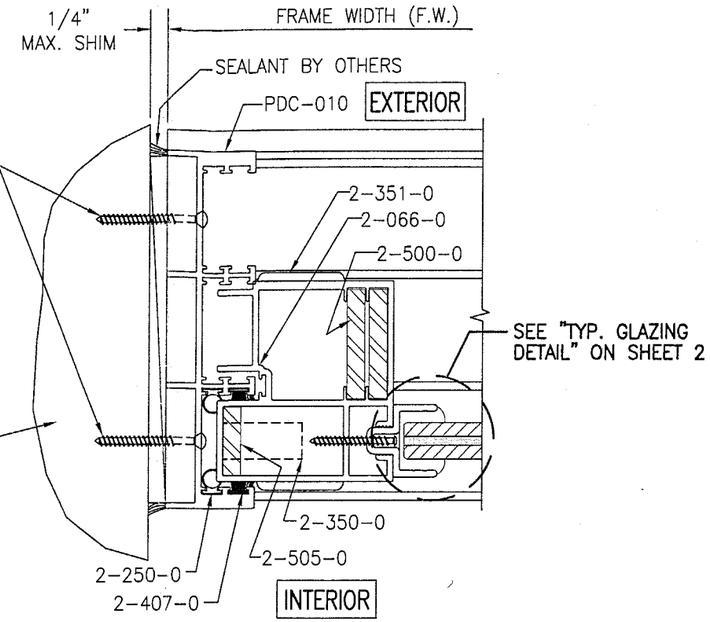

SECTION F/3
SCALE: 1/2 FULL

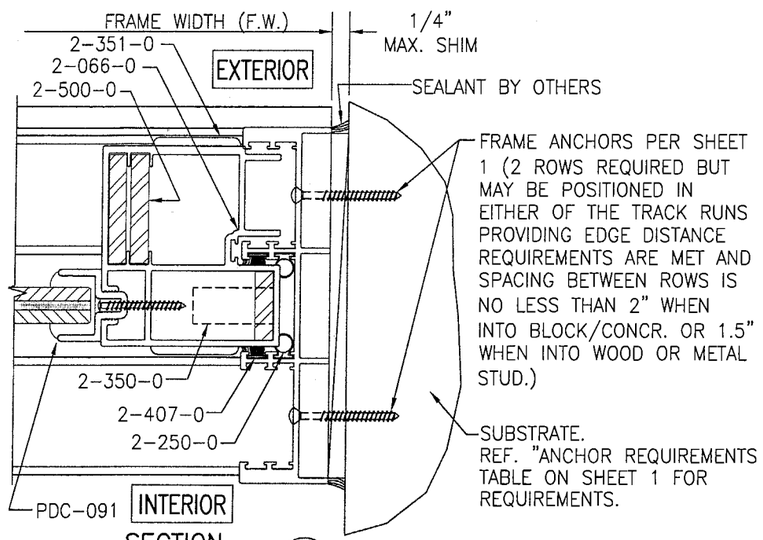

SECTION G/3
SCALE: 1/2 FULL

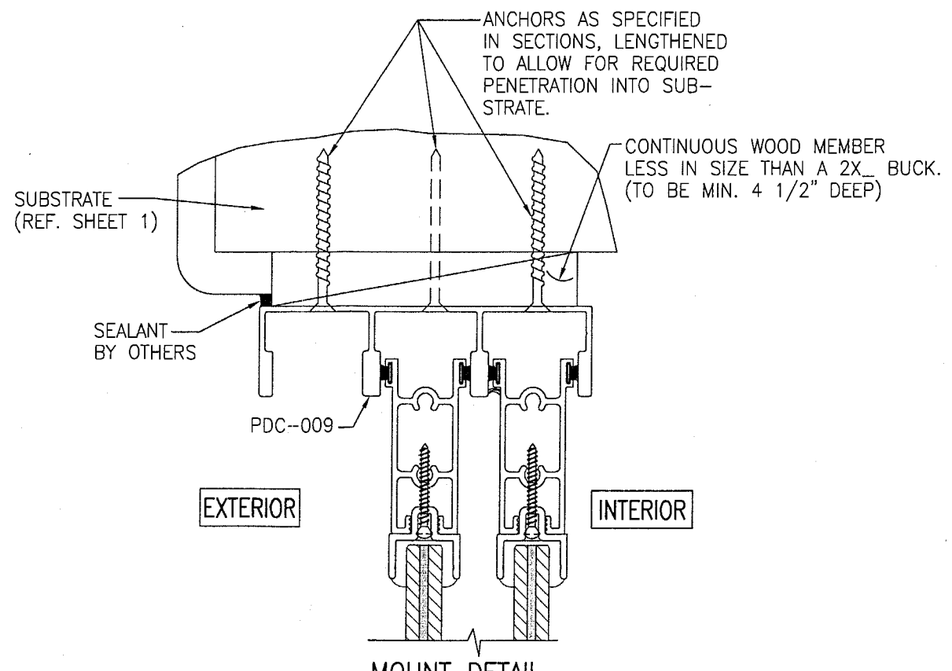

MOUNT DETAIL
WHEN SHIM SPACE EXCEEDS 1/4"
HEAD DETAIL SHOWN; SIDES SIMILAR
(SEE SECTIONS FOR DETAIL NOT SHOWN)

Approved as complying with the Florida Buiding Code
Date 04/17/03
NOA# 03-0206.02
Miami Dade Product Control Division
By Theodore Bernman

DRAWN BY: W.W.S.	CHECKED BY: W.W.S.
PLOT: 1=32	DATE: 09/24/02

NO.	REVISION DESCRIPTION	BY	DATE

DRAWING TITLE
TITAN "XI" SMALL MISSILE IMPACT SLIDING GLASS DOORS

MANUFACTURER
PLAZA DOOR CO., INC.
P.O. BOX 4304
WEST PALM BEACH, FL 33402
561-842-6511

CONSULTANTS
W. W. SCHAEFER ENGINEERING & CONSULTING, P.A.
600 SANDTREE DRIVE; SUITE 203B
PALM BEACH GARDENS, FL 33403
PHONE: 561-775-4902 FAX: 561-775-4903

CERTIFICATION
FEB 27 2003
WARREN W. SCHAEFER, P.E.
P.E. NO. 44135

DRAWING NO. 1172
REV.
SHEET NO. 3 OF 4

MATERIAL LIST

PART NO.	DESCRIPTION	LOCATION
WEATHERSTRIPPING & VINYL		
2-400-0	SCHLEGAL .270 WIDE POLY-BOND FINSEAL 7500 SERIES (PB-7518-270)	INSIDE AND OUTSIDE OF EACH DOOR PANEL TOP RAIL AGAINST FRAME HEAD SECTION.
2-407-0	SCHLEGAL .270 WIDE POLY-BOND FINSEAL 7500 SERIES (PB-7530-270)	INSIDE AND OUTSIDE OF EACH DOOR PANEL BOTTOM RAIL AGAINST FRAME SILL SECTION.
2-407-0	SCHLEGAL .270 WIDE POLY-BOND FINSEAL 7500 SERIES (PB-7530-270)	INSIDE AND OUTSIDE OF THE JAMB AT THE FIXED PANEL LOCATION.
2-407-0	SCHLEGAL .270 WIDE POLY-BOND FINSEAL 7500 SERIES (PB-7530-270)	PANEL INTERLOCK RAILS.
2-407-0	SCHLEGAL .270 WIDE POLY-BOND FINSEAL 7500 SERIES (PB-7530-270)	MEETING STILE LOCATION.
2-249-0	WIBORG VINYL CO. PVC BULB (WV-3180)	PANEL INTERLOCK RAILS.
2-250-0	WIBORG FINYL CO. PVC BULB (WV-3165)	INSIDE AND OUTSIDE OF THE JAMB AT THE FIXED PANEL LOCATION.
2-250-0	WIBIRG VINYL CO. PVC BULB (WV-3165)	MEETING STILE LOCATION.
2-255-0	TEAM PLASTICS INC. PVC	GLAZING VINYL.
HARDWARE		
2-300-0	ADJUSTABLE ROLLER ASSEMBLY - #P-13 SAUNDERS ENGINEERING CORP.	2 @ EACH ROLLING PANEL.
2-350-0	DEADLOCK - #1847-02 SS ADAMS RITE MANUFACTURING COMPANY	LOCKING RAIL OF MEETING PANELS.
2-351-0	LOCK ESCUTCHEON - #4430 ADAMS RITE MANUFACTURING COMPANY.	LOCKING RAIL OF MEETING PANELS.
3-001-0	LOCK KEEPER - SS PLAZA DOOR CO.,INC.	MEETING RAIL.
3-008-0	TRACK RAIN PAN - PLAZA DOOR CO., INC.	SILL TRACK
3-009-0	H.P. WEATHER TAB - PLAZA DOOR CO.	TOP OF INTERLOCK RAILS - EXTERIOR
FASTENERS		
2-005-0	#14 x 1 1/2" PH SS SMS	PANEL ASSEMBLY-TOP & BOTTOM
2-010-0	#12 x 1 1/4" PH SS SMS	ROLLER ASSEMBLY
2-040-0	#8 x 3/4" PH SS SMS 3" FROM ENDS & 18" O.C.	DOOR ASTRIGAL TO FIXED PANEL FASTENER
2-069-0	#8 x 1 1/4" PH SS SMS 3" FROM ENDS & 18" O.C.	SCREEN ASTRAGAL TO FIXED PANEL FASTENER
2-070-0	#8 x 1 1/4" FH SS SMS 1" FROM CORNERS & 14" O.C.	ATTACH GLAZING ADAPTER TO PAN
2-090-0	#10-24 x 1/4" FH SS MS	ATTACH HI-RISE FIN TO TRACK
EXTRUSIONS		
PDC-009	3-HEAD	HEAD TRAK
PDC-010	3-JAMB	FRAME JAMB
PDC-012	3-TRACK HI-RISE	SILL TRACK
PDC-085	4" HI-RISE ADAPTER	SILL TRACK
PDC-016	PANEL TOP RAIL	ALL PANELS
PDC-082	3 1/2" PANEL BOTTOM RAIL	ALL PANELS
PDC-015	DOOR SIDE RAIL	FIXED PANEL @ JAMB
PDC-066	TITAN DOOR SIDE RAIL	MEETING/LOCKING RAILS
PDC-072	TITAN INTERLOCK RAIL	ALL PANEL INTERLOCK RAILS
PDC-073	TITAN INTERLOCK STIFFENER	ALL PANEL INTERLOCK RAILS
PDC-002	DOOR ASTRAGAL	MEETING RAILS
PDC-022	SCREEN ASTRAGAL	MEETING RAILS
PDC-026	GLAZING ADAPTER	ALL PANELS
REINFORCEMENTS		
2-500-0	1/4" x 1 1/2" STEEL BAR - H.D. GALVANIZED (FULL LENGTH OF RAILS)	MEETING RAILS
2-505-0	1/4" x 1" x 12" LONG ALUMINUM BAR	TOP & BOTTOM OF ALL PANEL CORNERS

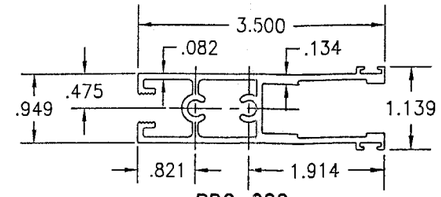

PDC-082
PANEL BOTTOM RAIL
(6063-T6)

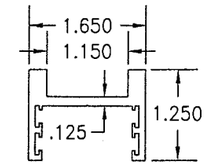

PDC-002
DOOR ASTRAGAL
(6063-T6)

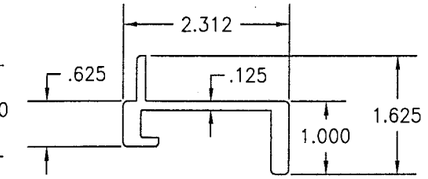

PDC-073
TITAN INTERLOCK STIFFENER
(6061-T6)

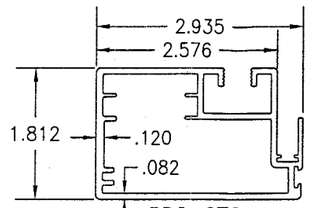

PDC-072
TITAN INTERLOCK RAIL
(6061-T6)

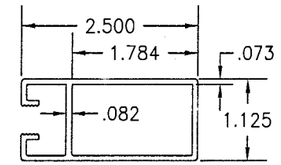

PDC-015
DOOR END RAIL
(6063-T6)

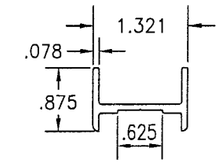

PDC-022
SCREEN ASTRAGAL
(6063-T6)

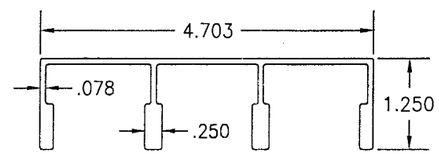

PDC-009
THREE HEAD
(6063-T5)

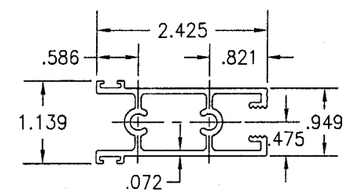

PDC-016
PANEL TOP RAIL
(6063-T6)

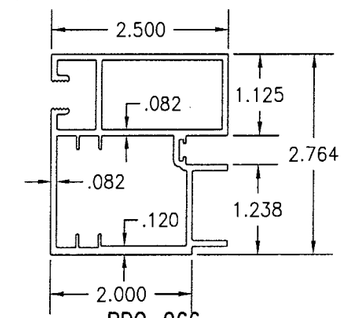

PDC-066
TITAN DOOR END RAIL
(6063-T6)

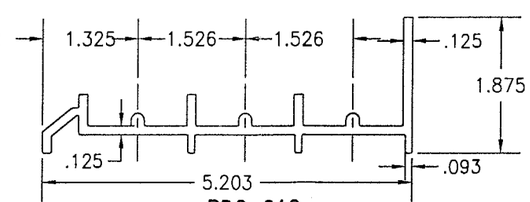

PDC-012
3-TRACK HI-RISE
(6063-T5)

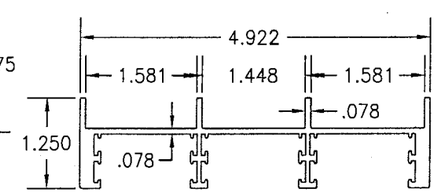

PDC-010
THREE JAMB
(6063-T5)

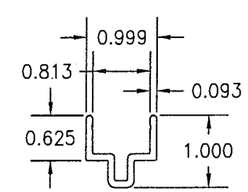

PDC-026
IMPACT GLASS ADAPTOR
(6063-T5)

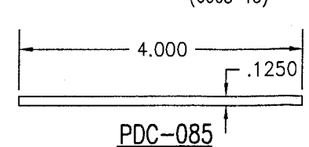

PDC-085
HI-RISE ADAPTER
(6063-T5)

2-249-0
PVC BULB

2-250-0
PVC BULB

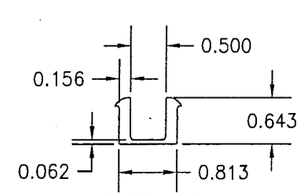

2-255-0
PLASTIC GLAZING GASKET

2-407-0
FINSEAL 7500

2-400-0
FINSEAL 7500

Approved as complying with the Florida Buiding Code
Date 04/17/03
NOA# 03-0206.02
Miami Dade Product Control Division
By Claudia Gorman

DRAWN BY: W.W.S.	CHECKED BY: W.W.S.
PLOT: 1=32	DATE: 09/24/02

NO.	REVISION DESCRIPTION	BY	DATE

DRAWING TITLE: TITAN "XI" SMALL MISSILE IMPACT SLIDING GLASS DOORS

MANUFACTURER: PLAZA DOOR CO., INC.
P.O. BOX 4304
WEST PALM BEACH, FL 33402
561-842-6511

CONSULTANTS: W. W. SCHAEFER ENGINEERING & CONSULTING, P.A.
600 SANDTREE DRIVE; SUITE 203B
PALM BEACH GARDENS, FL 33403
PHONE: 561-775-4902 FAX: 561-775-4903

CERTIFICATION
FEB 27 2003
WARREN W. SCHAEFER, P.E.
P.E. NO. 44135

DRAWING NO. 1172 REV.

SHEET NO. 4 OF 4