MIAMI-DADE

BUILDING CODE COMPLIANCE OFFICE (BCCO)
PRODUCT CONTROL DIVISION

MIAMI-DADE COUNTY, FLORIDA
METRO-DADE FLAGLER BUILDING
140 WEST FLAGLER STREET, SUITE 1603
MIAMI, FLORIDA 33130-1563
(305) 375-2901 FAX (305) 375-2908

NOTICE OF ACCEPTANCE (NOA)

Aluminum World, Inc.
1767 W. 37th Street, Unit #18
Hialeah, Florida 33012

SCOPE:

This NOA is being issued under the applicable rules and regulations governing the use of construction materials. The documentation submitted has been reviewed by Miami-Dade County Product Control Division and accepted by the Board of Rules and Appeals (BORA) to be used in Miami Dade County and other areas where allowed by the Authority Having Jurisdiction (AHJ).

This NOA shall not be valid after the expiration date stated below. The Miami-Dade County Product Control Division (In Miami Dade County) and/or the AHJ (in areas other than Miami Dade County) reserve the right to have this product or material tested for quality assurance purposes. If this product or material fails to perform in the accepted manner, the manufacturer will incur the expense of such testing and the AHJ may immediately revoke, modify, or suspend the use of such product or material within their jurisdiction. BORA reserves the right to revoke this acceptance, if it is determined by Miami-Dade County Product Control Division that this product or material fails to meet the requirements of the applicable building code.

This product is approved as described herein, and has been designed to comply with the High Velocity Hurricane Zone of the Florida Building Code.

DESCRIPTION: "Storm Guard" 0.063" Aluminum Storm Panels Shutter

APPROVAL DOCUMENT: Drawing No. **02-576**, titled " Storm Panel – Storm Guard ", sheets 1 through 7 of 7, prepared by Tilteco, Inc., dated December 12, 2002, last revision #1 dated December 12, 2002 bearing the Miami-Dade County Product Control Revision stamp with the Notice of Acceptance number and expiration date by the Miami-Dade County Product Control Division.

MISSILE IMPACT RATING: Large and Small Missile Impact

LABELING: Each panel shall bear a permanent label with the manufacturer's name or logo, city, state and the following statement: "Miami-Dade County Product Control Approved", unless otherwise noted herein.

RENEWAL of this NOA shall be considered after a renewal application has been filed and there has been no change in the applicable building code negatively affecting the performance of this product.

TERMINATION of this NOA will occur after the expiration date or if there has been a revision or change in the materials, use, and/or manufacture of the product or process. Misuse of this NOA as an endorsement of any product, for sales, advertising or any other purposes shall automatically terminate this NOA. Failure to comply with any section of this NOA shall be cause for termination and removal of NOA.

ADVERTISEMENT: The NOA number preceded by the words Miami-Dade County, Florida, and followed by the expiration date may be displayed in advertising literature. If any portion of the NOA is displayed, then it shall be done in its entirety.

INSPECTION: A copy of this entire NOA shall be provided to the user by the manufacturer or its distributors and shall be available for inspection at the job site at the request of the Building Official.

This NOA **revises NOA # 01-1029.03** and consists of this page 1 as well as approval document mentioned above. The submitted documentation was reviewed by **Helmy A. Makar, P.E.**

PRODUCT CONTROL ACCEPTED

NOA No 03-0206.07
Expiration Date: 11/16/2003
Approval Date: 04/03/2003

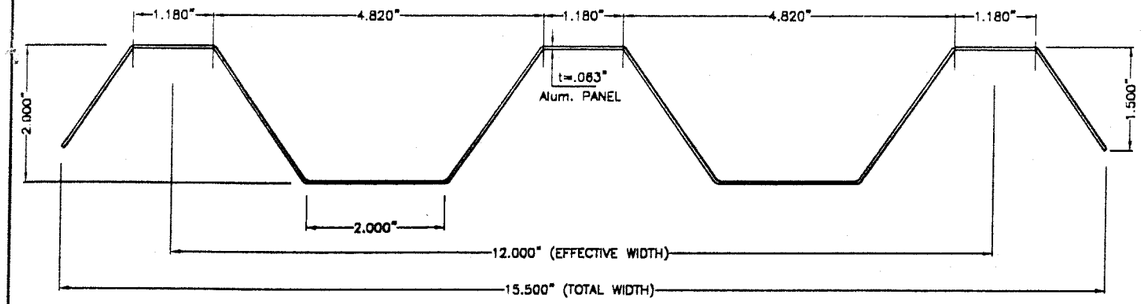

① PANEL

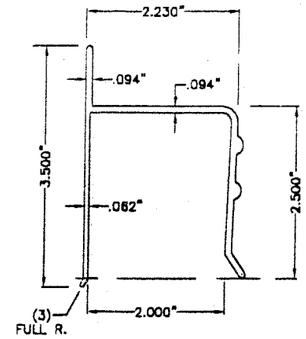

② HEADER

6063-T5 Alum. ALLOY

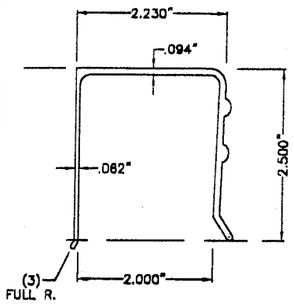

③ HEADER

6063-T5 Alum. ALLOY

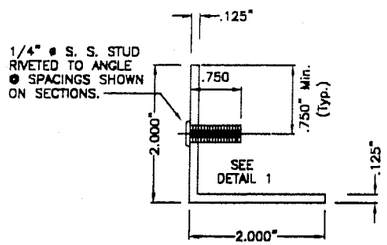

④ BASE ANGLE

6063-T5 Alum. ALLOY

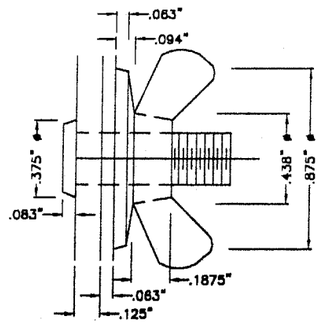

DETAIL 1: STUD W/ WING NUT

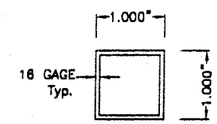

⑤ STEEL TUBE REINFORCEMENT

ASTM A-525 W/
FY = 33 ksi

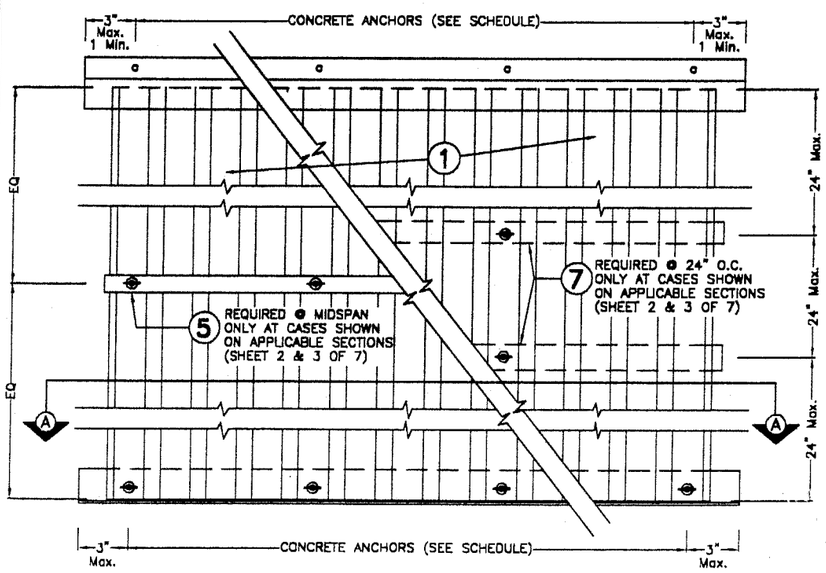

STORM PANEL TYPICAL ELEVATION

SEE SHEET 3 OF 7 FOR REINFORCING DETAILS W/ ⑤ OR ⑦.

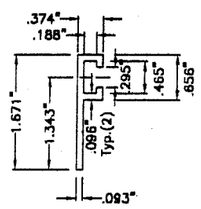

⑥ STUD PLATE

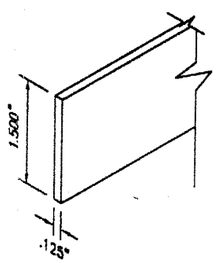

⑦ ALUMINUM STRAP

COMPONENTS

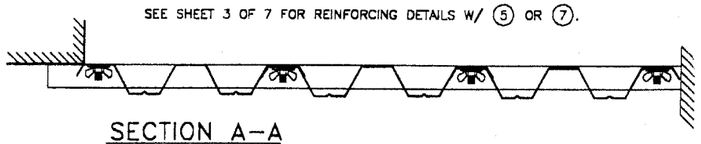

SECTION A-A

* ATTN. BLDG. OFFICIALS DO NOT ACCEPT THIS DRAWING W/O ALUMINUM WORLD, INC. RAISED CORPORATE SEAL

CORPORATE SEAL *

GENERAL NOTES:

1. STORM PANEL SHOWN ON THIS PRODUCT APPROVAL DOCUMENT HAS BEEN DESIGNED IN ACCORDANCE WITH THE 2001 EDITION OF THE FLORIDA BUILDING CODE.
DESIGN WIND LOADS SHALL BE DETERMINED AS PER SECTION 1619 OF THE ABOVE MENTIONED CODE, FOR A BASIC WIND SPEED OF 146 m.p.h., AND IN ACCORDANCE W/ ASCE 7-98 STANDARD.
STORM PANEL'S ADEQUACY FOR IMPACT AND FATIGUE RESISTANCE HAS BEEN VERIFIED IN ACCORDANCE WITH SECTION 1606.1.4 OF THE ABOVE MENTIONED CODE AS PER PA-201, PA-202 & PA-203 STANDARD.

2. ALL ALUMINUM SHEET METAL PANELS SHALL BE 5052-H32 ALLOY.

3. ALL ALUMINUM EXTRUSIONS SHALL BE 6063-T6 ALLOY UNLESS OTHERWISE NOTED.

4. ALL SCREWS TO BE STAINLESS STEEL 304 OR 316 SERIES SERIES W/50 ksi YIELD POINT AND 90 ksi TENSILE STRENGTH OR CORROSION RESISTANT COATED CARBON STEEL AS PER DIN 50018.

5. BOLTS TO BE 2024-T4 ALUMINUM ALLOY, GALVANIZED OR STAINLESS STEEL, WITH 36 ksi MINIMUM YIELD POINT.

6. ANCHORS TO WALL SHALL BE AS FOLLOWS: (UNLESS OTHERWISE NOTED)
(A) TO EXISTING POURED CONCRETE:
-1/4" ø TAPCON ANCHORS, AS MANUFACTURED BY I.T.W. BUILDEX OR ELCO TEXTRON.
-1/4" ø x 7/8" STAR TAMPIN ANCHORS OR CALK-IN, AS MANUFACTURED BY STAR EXPANSION & POWERS FASTENING, INC. RESPECTIVELY.
NOTES:
A.1) MINIMUM EMBEDMENT OF TAPCON ANCHORS INTO CONCRETE SHALL BE 1 3/4".
A.2) 7/8" TAMPIN ANCHORS OR CALK-IN SHALL BE ENTIRELY EMBEDDED INTO THE POURED CONCRETE. NO EMBEDMENT INTO STUCCO SHALL BE PERMITTED.
1/4" ø-20 SCREWS USED SHALL BE 1 1/2" LONG MINIMUM SHOULD STUCCO EXIST.
A.3) IN CASE THAT PRECAST STONE, PRECAST CONCRETE PANELS, OR PAVERS BE FOUND ON THE EXISTING WALL OR FLOOR, ANCHORS SHALL BE LONG ENOUGH TO REACH THE MAIN STRUCTURE BEHIND SUCH PANELS, ANCHORAGE SHALL BE 1 3/4" MINIMUM FOR ANCHORS MENTIONED IN A.1), & 7/8" FOR ANCHORS MENTIONED IN A.2).

(B) TO EXISTING CONCRETE BLOCK WALL:
- 1/4" ø TAPCON ANCHORS, AS MANUFACTURED BY I.T.W. BUILDEX OR ELCO TEXTRON.
- 1/4" ø x 7/8" STAR TAMPIN ANCHORS OR CALK-IN AS MANUFACTURED BY STAR EXPANSION & POWERS FASTENING, INC. RESPECTIVELY.
NOTES:
B.1) MINIMUM EMBEDMENT OF TAPCON ANCHORS, INTO THE CONCRETE BLOCK UNIT SHALL BE 1 1/4".
B.2) 7/8" TAMPIN OR CALK-IN ANCHORS SHALL BE ENTERILY EMBEDDED INTO THE CONCRETE BLOCK UNIT. NO EMBEDMENT INTO STUCCO SHALL BE PERMITTED.
1/4" ø-20 SCREWS USED SHALL BE 1 1/2" LONG MINIMUM SHOULD STUCCO EXIST, AND 1" MINIMUM FOR WALLS WITH NO STUCCO.
B.3) IN CASE THAT PRECAST STONE OR PRECAST CONCRETE PANELS BE FOUND ON THE EXISTING WALL, ANCHORS SHALL BE LONG ENOUGH TO REACH THE MAIN STRUCTURE BEHIND SUCH PANELS. ANCHORAGE SHALL BE 1 1/4" MINIMUM FOR ANCHORS MENTIONED IN B.1). & 7/8" FOR ANCHORS MENTIONED IN B.2).

(C) ANCHORS SHALL BE INSTALLED FOLLOWING ALL OF THE RECOMMENDATIONS AND SPECIFICATIONS OF THE ANCHOR'S MANUFACTURER.

(D) ANCHORAGE TO WOOD FRAME BUILDINGS NOT COVERED ON THIS DRAWING SHALL BE ENGINEERED (D) ON A JOB BY JOB BASIS.

7. PANELS MAY ALSO BE INSTALLED HORIZONTALLY FOLLOWING INSTALLATION DETAILS SHOWN ON SECTIONS 2, 2A, 3, 6 & 6A (SHEET 2 & 3 OF 7).

8. EACH PANEL SHALL HAVE A LEGIBLE AND READILY VISIBLE MARKING INSTRUCTING OWNER OR TENANT TO SECURE PANELS WITH APPLICABLE REINFORCEMENT DURING PERIODS OF HURRICANE WARNING.

9. IT SHALL BE THE RESPONSIBILITY OF THE CONTRACTOR TO VERIFY THE SOUNDNESS OF THE STRUCTURE WHERE SHUTTER IS TO BE ATTACHED TO INSURE PROPER ANCHORAGE.

10. (A) THIS PRODUCT APPROVAL DOCUMENT (P.A.D.) PREPARED BY THIS ENGINEER IS GENERIC AND DOES NOT PROVIDE INFORMATION FOR A SITE SPECIFIC PROJECT; i.e. WHERE THE SITE CONDITIONS DEVIATE FROM THE P.A.D.

(B) CONTRACTOR TO BE RESPONSIBLE FOR THE SELECTION, PURCHASE AND INSTALLATION OF THIS PRODUCT BASED ON THIS PRODUCT APPROVAL PROVIDED HE/SHE DOES NOT DEVIATE FROM THE CONDITIONS DETAILED ON THIS DOCUMENT.

(C) THIS PRODUCT APPROVAL DOCUMENT WILL BE CONSIDERED INVALID IF MODIFIED.

(d) SITE SPECIFIC PROJECTS SHALL BE PREPARED BY A FLORIDA REGISTERED ENGINEER OR ARCHITECT WHICH WILL BECOME THE PROFESSIONAL OF RECORD (P.O.R.) FOR THE PROJECT AND WHO WILL BE RESPONSIBLE FOR THE PROPER USE OF THE P.A.D. PROFESSIONAL OF RECORD, ACTING AS DELEGATED ENGINEER TO THE P.A.D. ENGINEER, SHALL SUBMIT TO THIS LATTER THE SITE SPECIFIC DRAWINGS FOR REVIEW.

(e) THIS P.A.D. SHALL BEAR THE DATE AND ORIGINAL SEAL AND SIGNATURE OF THE PROFESSIONAL ENGINEER THAT PREPARED IT.

11. SHUTTER MANUFACTURER'S LABEL SHALL BE PLACED AT BOTTOM OF EACH PANEL. LABEL SHALL READ AS FOLLOWS:
ALUMINUM WORLD, INC.
HIALEAH, FLORIDA
MIAMI-DADE COUNTY PRODUCT CONTROL APPROVED.

PRODUCT REVISED
as complying with the Florida Building Code
Acceptance No 03-0206.07
Expiration Date 11/16/2003
By Helmy H. Nader
Miami Dade Product Control Division

F.B.C.(H.V.H.Z.)/MIAMI-DADE COUNTY

TILTECO INC.
TILLIT TESTING & ENGINEERING COMPANY
6595 N.W. 36th. St., Ste. 217, VIRGINIA GARDENS, FL 33166
Phone : (305)871-1530 . Fax : (305)871-1531
EB-0006719
WALTER A. TILLIT Jr., P. E.
FLORIDA Lic. 44167

STORM PANEL-"STORM GUARD"

ALUMINUM WORLD, INC.
1767 W. 37 STREET UNIT: 18
HIALEAH, FLORIDA 33012

REV. NO	DESCRIPTION	DATE	REV. No	DESCRIPTION	DATE
1	OLD 01-281	12/12/02	3	-	-
2	-	-	4	-	-

SCALE	
DATE	12/12/02
DRAWING No	02-576
	SHEET 1 OF 7

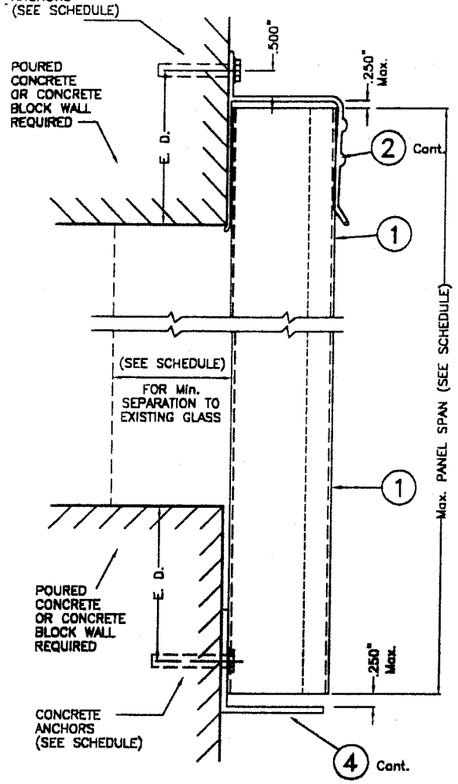

SECTION @ ANCHOR

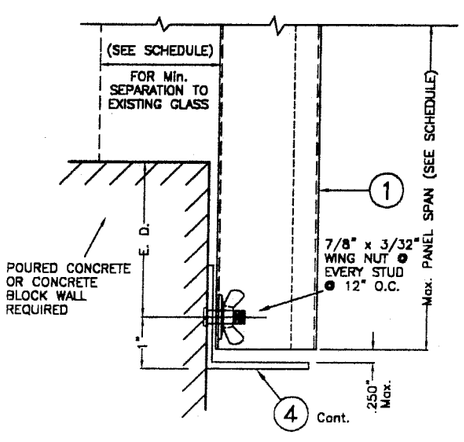

SECTION @ STUD

WALL MOUNTING INSTALLATION – SECTION 1

NOTE: DETAIL OF SECTION @ STUD VALID ALSO FOR WALL MOUNTING INSTALLATION – SECTION 2

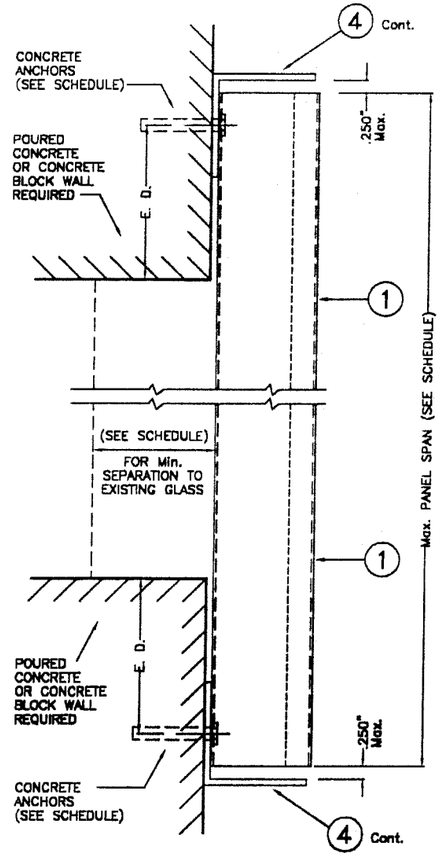

WALL MOUNTING INSTALLATION – SECTION 2

E. D. = EDGE DISTANCE (SEE SCHEDULE ON SHEET 7 OF 7)

12/4/02

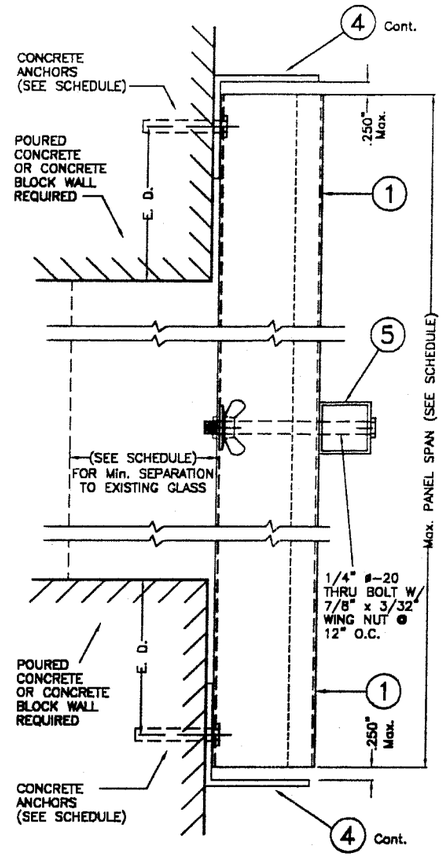

SECTION @ ANCHOR

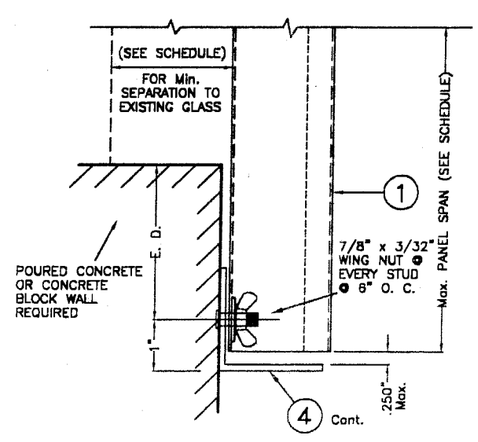

SECTION @ STUD

WALL MOUNTING INSTALLATION – SECTION 2A

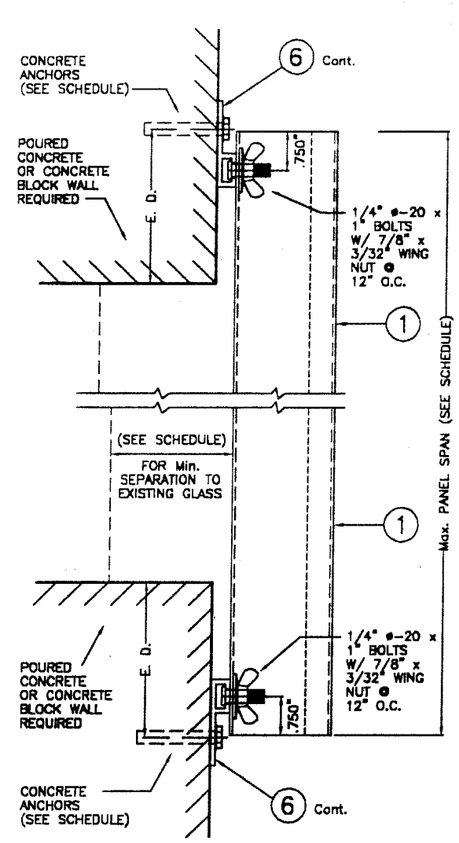

WALL MOUNTING INSTALLATION – SECTION 3

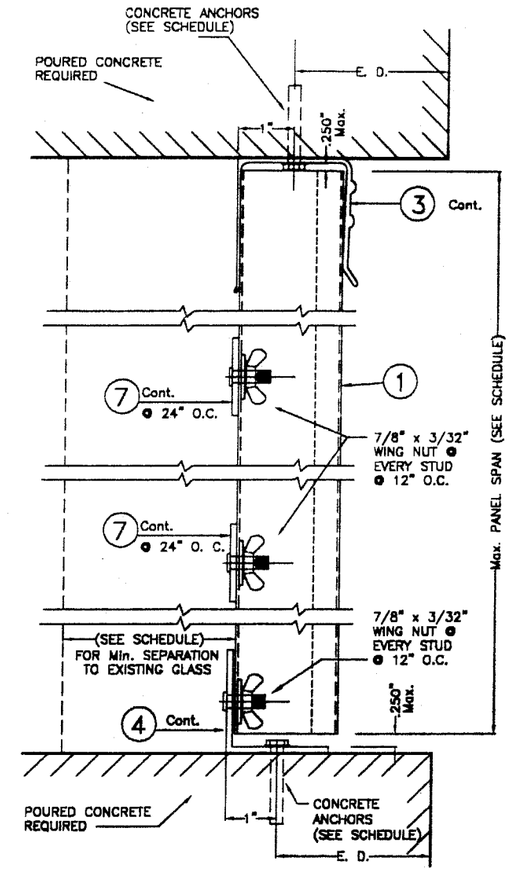

CEILING & FLOOR MOUNT. INSTALL. – SECTION 4

PRODUCT REVISED
as complying with the Florida Buiding Code
Acceptance No 03-0206.07
Expiration Date 11/16/2003
By Helmy A. Miller
Miami Dade Product Control Division

F.B.C.(H.V.H.Z.)/MIAMI-DADE COUNTY

TILTECO INC.
TILLIT TESTING & ENGINEERING COMPANY
8595 N.W. 38th. St., Ste. 217, VIRGINIA GARDENS, FL 33166
Phone : (305)871-1530 . Fax : (305)871-1531
EB-0006719
WALTER A. TILLIT Jr., P. E.
FLORIDA Lic. 44167

STORM PANEL-"STORM GUARD"

ALUMINUM WORLD, INC.
1767 W. 37 STREET UNIT: 18
HIALEAH, FLORIDA 33012

REV. NO	DESCRIPTION	DATE	REV. No	DESCRIPTION	DATE
1	OLD 01-281	12/12/02	3	–	–
2	–	–	4	–	–

SCALE

12/12/02
DATE

02-576
DRAWING No

SHEET 2 OF 7

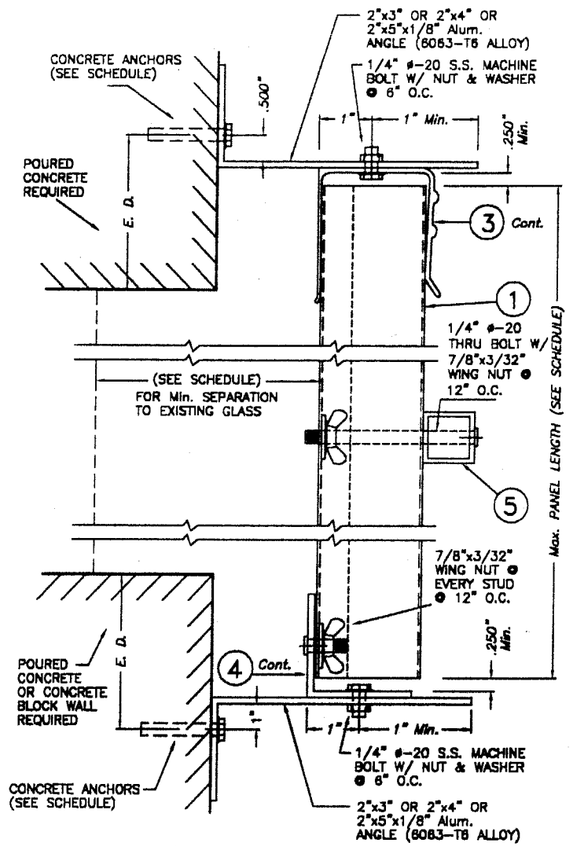

BUILD-OUT MOUNTING INSTALLATION - SECTION 5

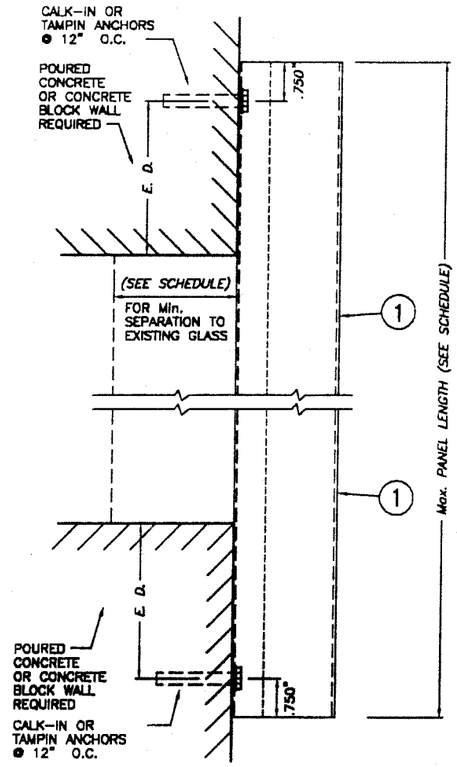

WALL MOUNTING INSTALLATION (DIRECT MOUNT) - SECTION 6

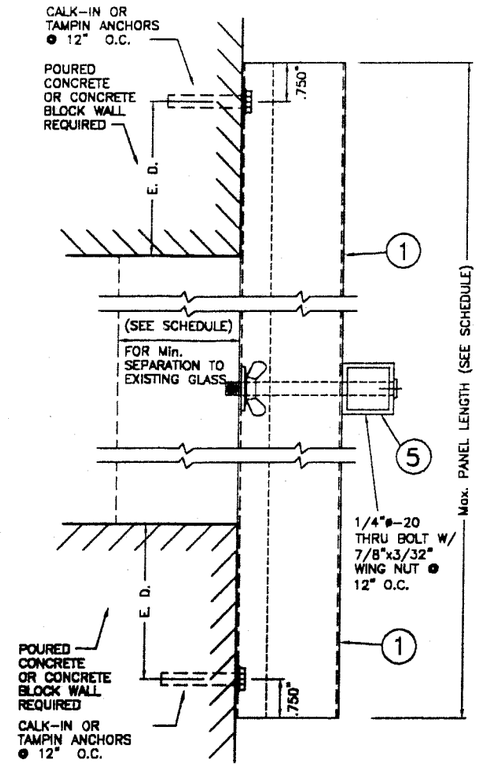

WALL MOUNTING INSTALLATION (DIRECT MOUNT) - SECTION 6A

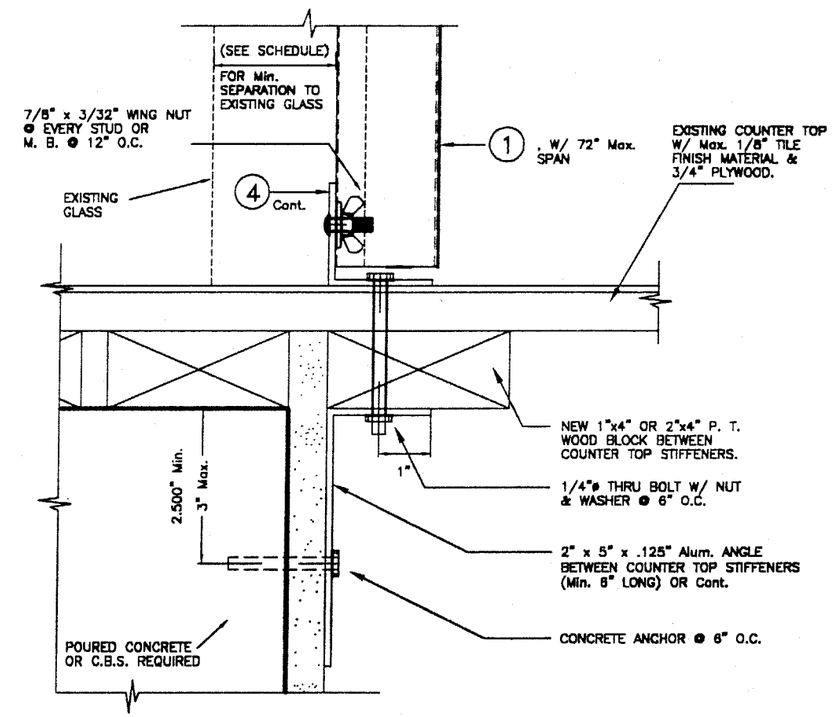

BOTTOM CONNECTION DETAIL FOR STORM PANELS INSTALLED AT PASS THRU WINDOWS

: VALID FOR MAXIMUM SHTTER HEIGHT = 6 ft. AND MAXIMUM

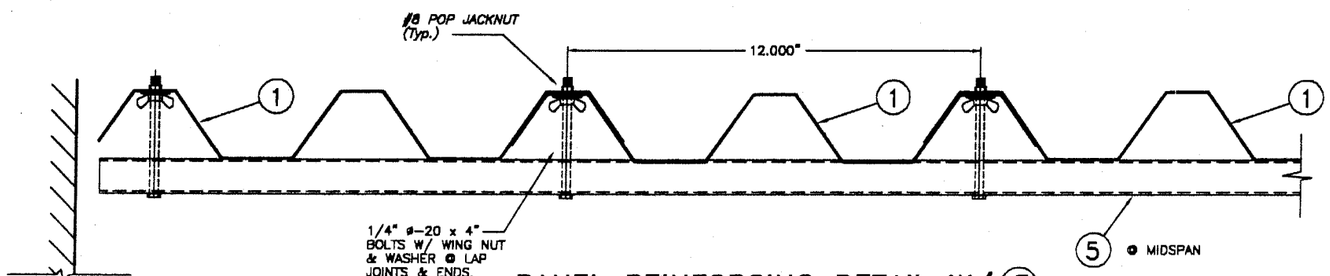

PANEL REINFORCING DETAIL W/ 5

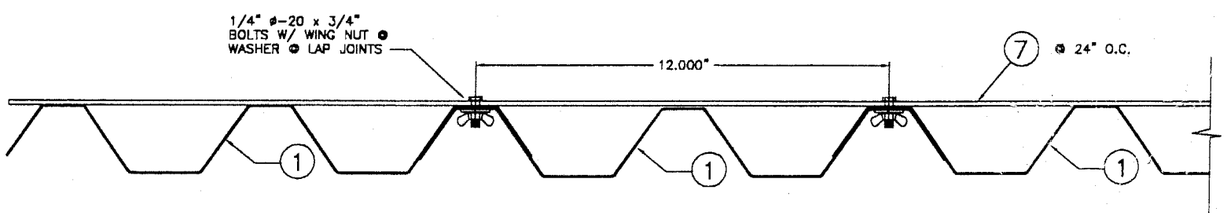

PANEL REINFORCING DETAIL W/ 7

12/12/02

E. D. = EDGE DISTANCE (SEE SCHEDULE ON SHEET 7 OF 7)

PRODUCT REVISED
as complying with the Florida Buiding Code
Acceptance No 03-0206.07
Expiration Date 11/16/2003
By [signature]
Miami Dade Product Control Division

F.B.C.(H.V.H.Z.)/MIAMI-DADE COUNTY

TILTECO INC.
TILLIT TESTING & ENGINEERING COMPANY
6595 N.W. 36th. St., Ste. 217, VIRGINIA GARDENS, Fl. 33166
Phone : (305)871-1530 . Fax : (305)871-1531
EB-0006719
WALTER A. TILLIT Jr., P. E.
FLORIDA Lic. 44167

STORM PANEL-"STORM GUARD"

ALUMINUM WORLD, INC.
1767 W. 37 STREET UNIT: 18
HIALEAH, FLORIDA 33012

REV. NO	DESCRIPTION	DATE	REV. No	DESCRIPTION	DATE
1	OLD 01-281	12/12/02	3	-	-
2	-	-	4	-	-

SCALE

12/12/02
DATE

02-576
DRAWING No

SHEET 3 OF 7

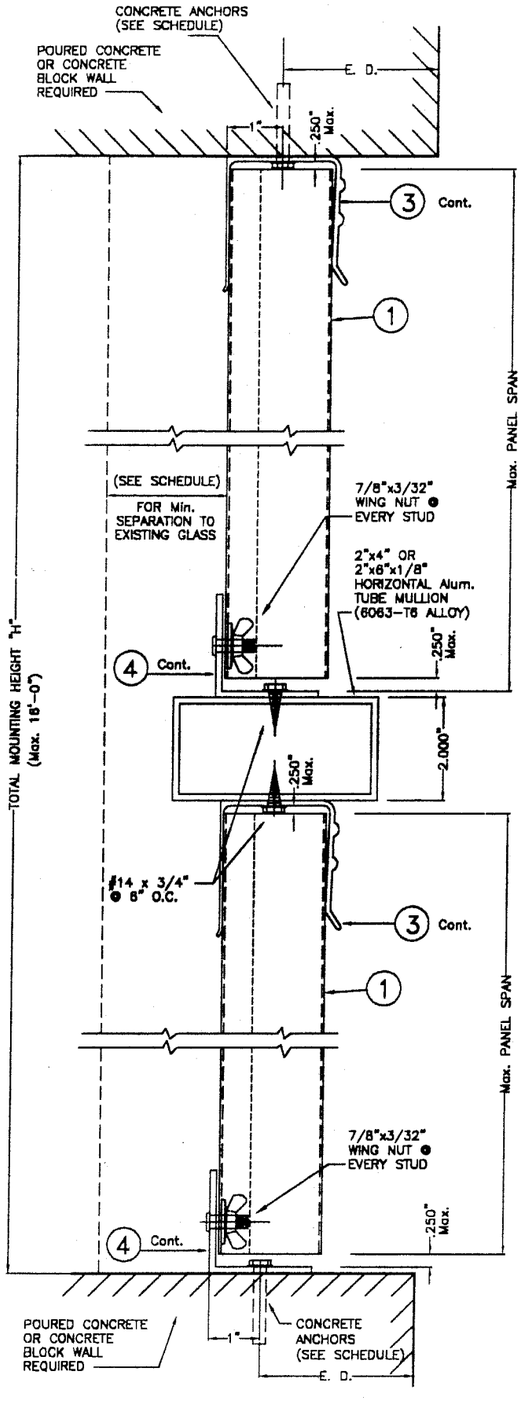

SPLIT PANEL MOUNTING INSTALLATION – SECTION 7

NOTE : FLOOR & CEILING MOUNT INSTALLATIONS SHOWN. FOR DIFFERENT MOUNTING INSTALLATIONS SEE TYPICAL SECTIONS ON SHEET 2 & 3 OF 7.

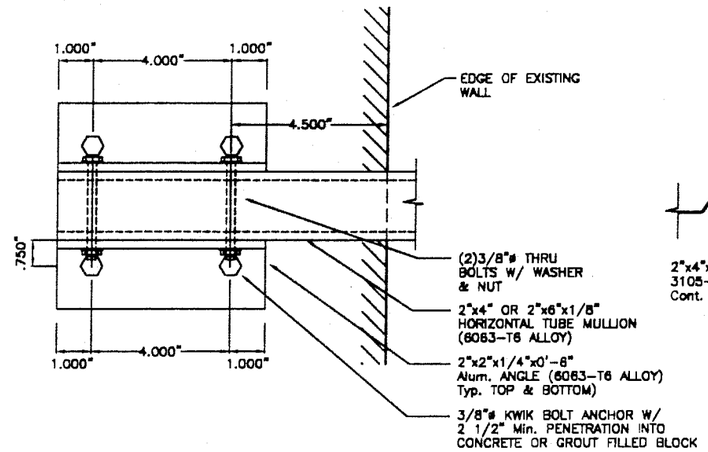

HORIZONTAL TUBE MULLION CONNECTION TO WALL

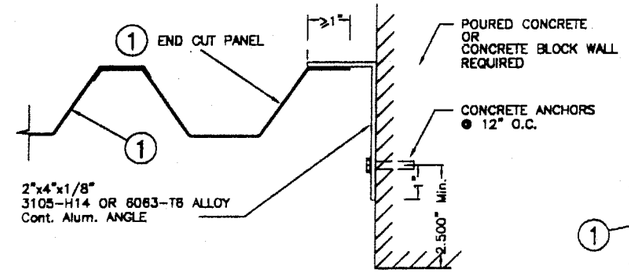

CASE A (Plan)

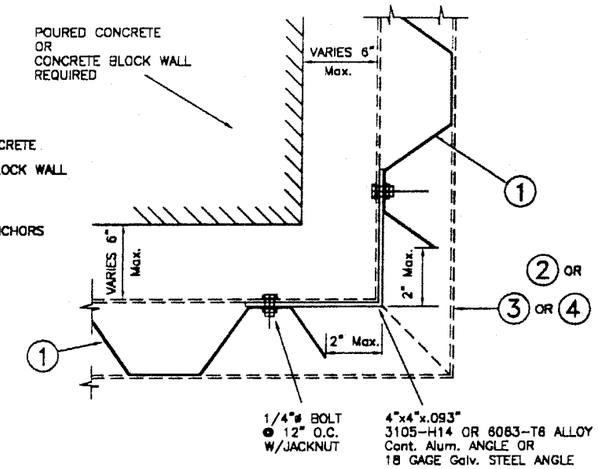

CASE B (Plan)

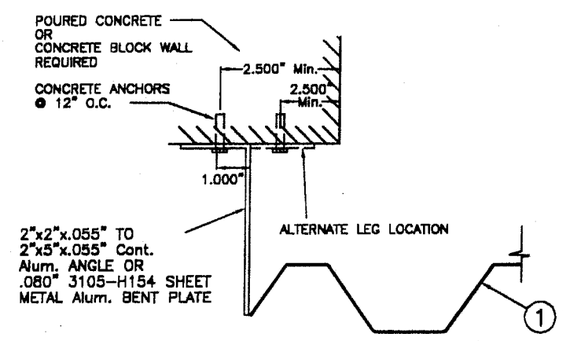

CASE C (Plan)

END CLOSURES DETAILS

MAXIMUM MULLION SPAN (HORIZONTALLY) SCHEDULE FOR SPLIT PANEL INSTALLATION

MAXIMUM DESIGN LOAD "W" (p.s.f.)	TOTAL MOUNTING HEIGHT "H"			
	≤ 10'-0"	10'< H <12'	12'< H <14'	14'< H <16'
40	7'-7"	7'-2"	6'-10"	6'-6"
	10'-8"	10'-1"	9'-7"	9'-2"
50	7'-1"	6'-8"	6'-4"	6'-0"
	9'-11"	9'-4"	8'-11"	8'-6"
60	6'-8"	6'-3"	5'-11"	5'-8"
	9'-4"	8'-10"	8'-4"	8'-0"
70	6'-4"	5'-11"	5'-8"	5'-5"
	8'-10"	8'-4"	7'-11"	7'-7"
80	6'-0"	5'-8"	5'-5"	5'-2"
	8'-6"	8'-0"	7'-7"	7'-3"
90	5'-10"	5'-6"	5'-2"	5'-0"
	8'-2"	7'-8"	7'-4"	7'-0"

2"x4" TUBE
2"x6" TUBE

E. D. = EDGE DISTANCE (SEE SCHEDULE ON SHEET 7 OF 7)

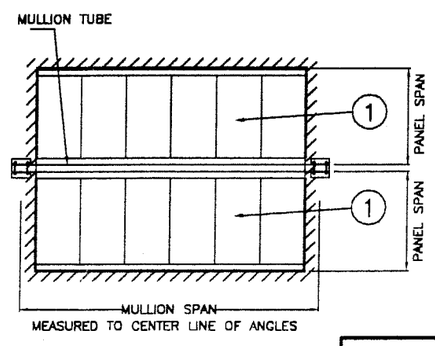

TYPICAL SPLIT PANEL INSTALLATION ELEVATION W/ MULLION TUBE

PRODUCT REVISED
as complying with the Florida Building Code
Acceptance No 03-0206.07
Expiration Date 11/16/2003
By Helmy A. Mekkawy
Miami Dade Product Control Division

F.B.C.(H.V.H.Z.)/MIAMI-DADE COUNTY

TILTECO INC.
TILLIT TESTING & ENGINEERING COMPANY
8595 N.W. 38th. St., Ste. 217, VIRGINIA GARDENS, Fl. 33166
Phone : (305)871-1530 . Fax : (305)871-1531
EB-0006719
WALTER A. TILLIT Jr., P. E.
FLORIDA Lic. 44167

STORM PANEL–"STORM GUARD"

ALUMINUM WORLD, INC.
1767 W. 37 STREET UNIT: 18
HIALEAH, FLORIDA 33012

REV. NO	DESCRIPTION	DATE	REV. No	DESCRIPTION	DATE
1	OLD 01-281	12/12/02	3	–	–
2	–	–	4	–	–

SCALE
12/12/02
DATE
02-576
DRAWING No
SHEET 4 OF 7

12/12/02

INSTALLATION DETAILS ON EXISTING WOOD BUILDINGS

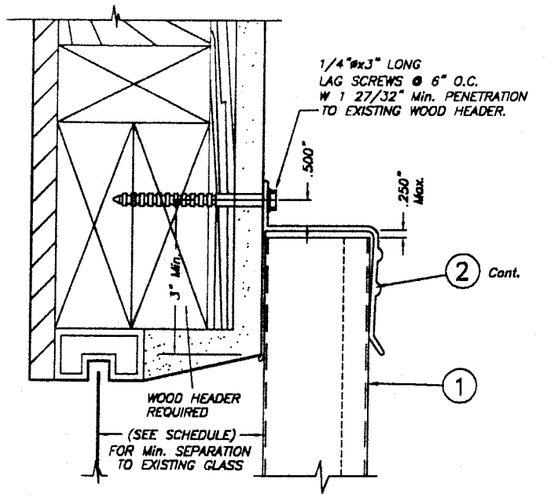

ALTERNATIVE 1

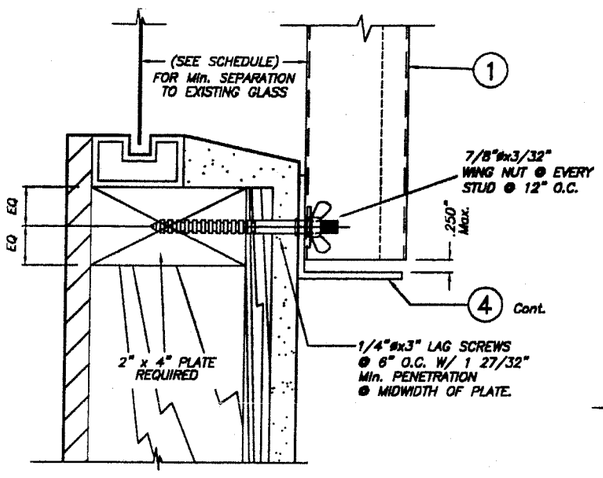

ALTERNATIVE 2

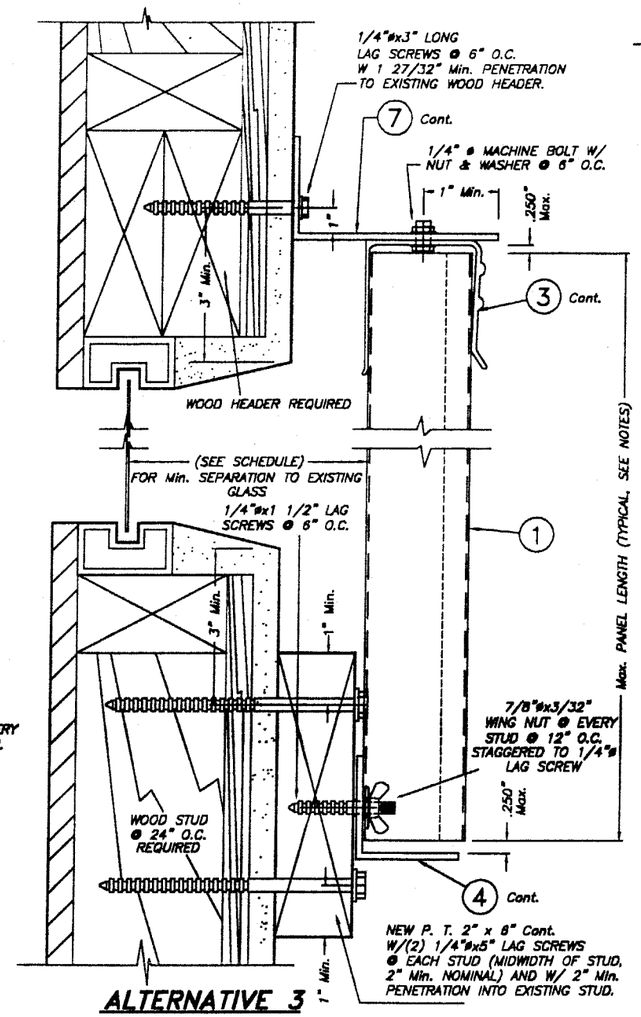

ALTERNATIVE 3

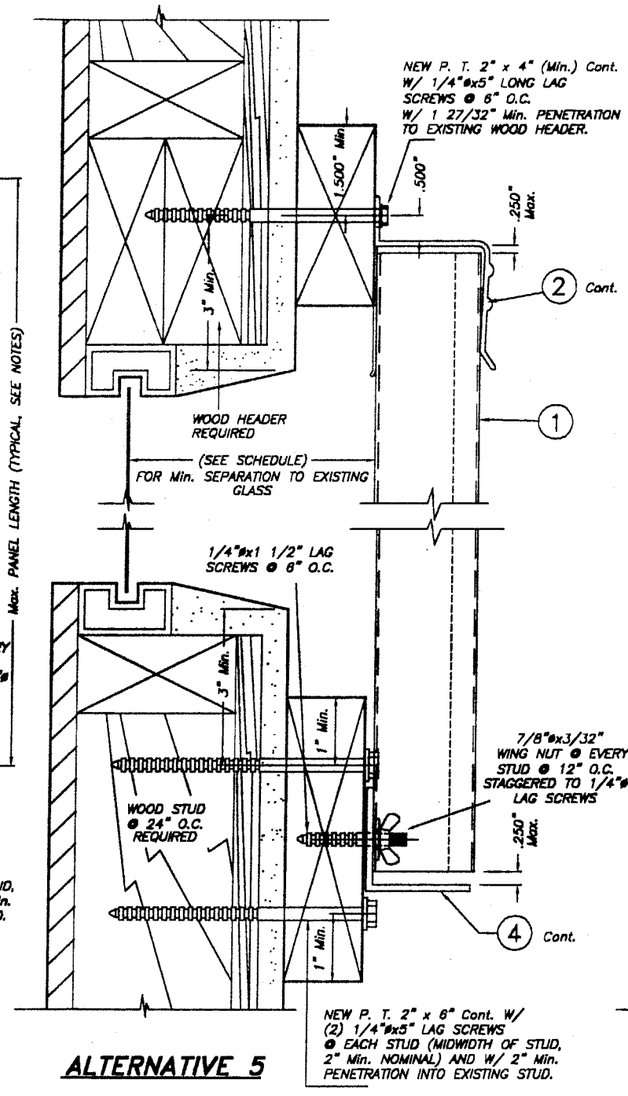

ALTERNATIVE 5

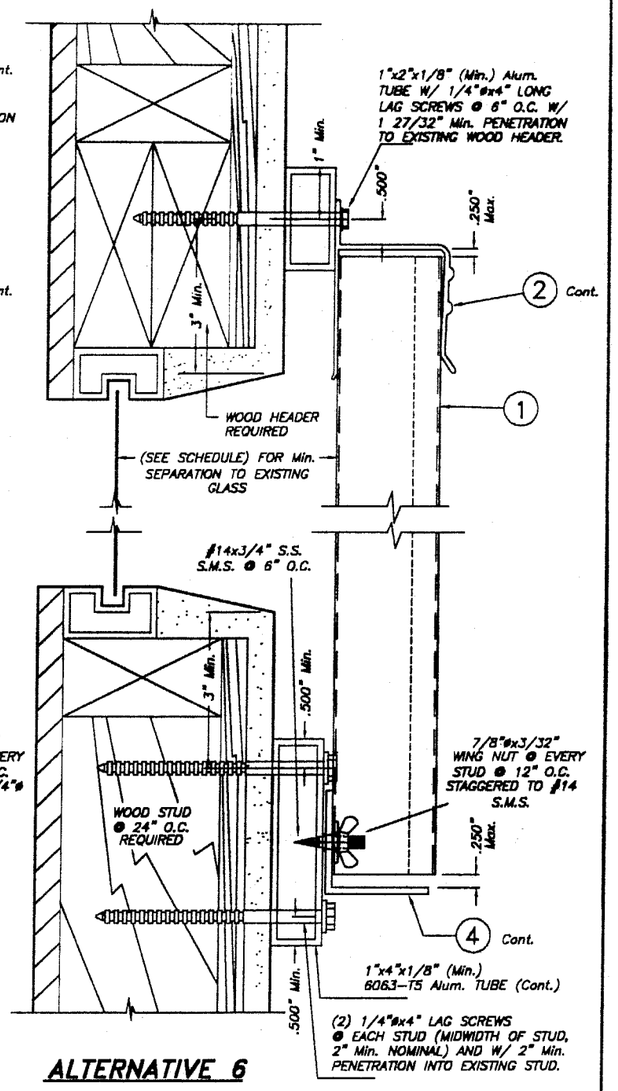

ALTERNATIVE 6

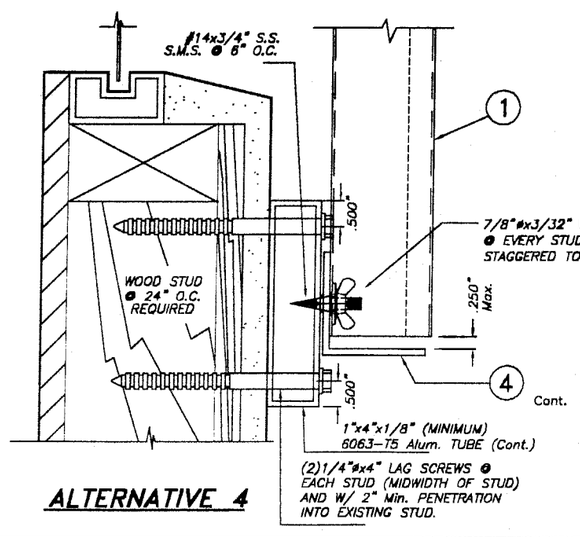

ALTERNATIVE 4

WALL MOUNTING INSTALLATION – SECTIONS A

NOTE FOR COMBINATION OF SECTIONS:

WALL MOUNTING SECTIONS CAN BE COMBINED IN ANY WAY TO SUIT ANY INSTALLATION.

NOTES:

1. INSTALLATIONS ARE ONLY VALID FOR DESIGN WIND LOADS UP TO +60.0, −76.0 p.s.f. AND PANEL'S LENGTHS UP TO 8'−10".
2. NEW 2" x 6" P. T. TO BE SOUTHERN PINE No. 2, SURFACED DRY WITH 19 % M. M. C. W/ SPECIFIC DENSITY OF 0.55.
3. FOR NEW WOOD FRAME CONSTRUCTION: WOOD MEMBERS TO BE SOUTHERN PINE No. 2, W/ SPECIFIC DENSITY OF 0.55 OR EQUAL.

PRODUCT REVISED
as complying with the Florida Building Code
Acceptance No 03-0206.07
Expiration Date 11/16/2003
By Helmy A. Melo
Miami Dade Product Control Division

F.B.C.(H.V.H.Z.)/MIAMI-DADE COUNTY

TILTECO INC.
TILLIT TESTING & ENGINEERING COMPANY
8595 N.W. 36th. St., Ste. 217, VIRGINIA GARDENS, Fl. 33166
Phone : (305)871-1530 Fax : (305)871-1531
EB-0006719
WALTER A. TILLIT Jr., P. E.
FLORIDA Lic. 44167

STORM PANEL–"STORM GUARD"

ALUMINUM WORLD, INC.
1767 W. 37 STREET UNIT: 18
HIALEAH, FLORIDA 33012

REV. NO	DESCRIPTION	DATE	REV. No	DESCRIPTION	DATE
1	OLD 01-281	12/12/02	3	–	–
2	–	–	4	–	–

SCALE

12/12/02
DATE

02-576
DRAWING No

SHEET 5 OF 7

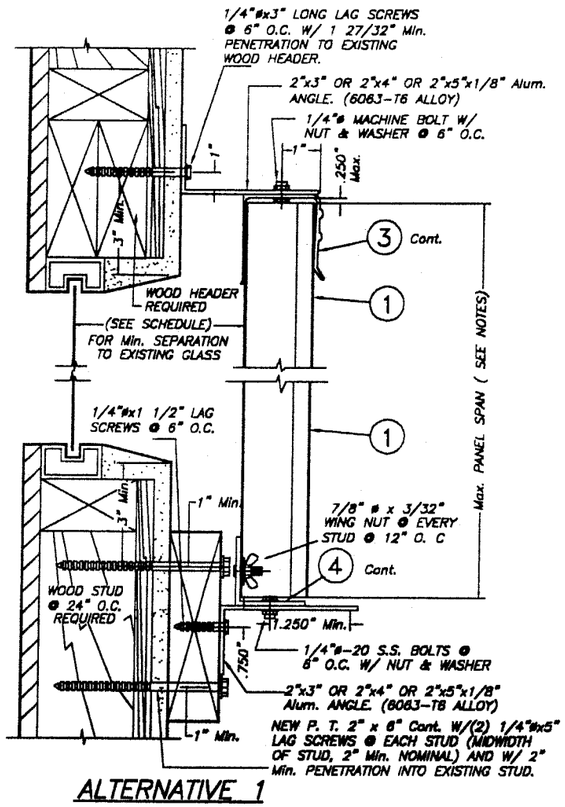

ALTERNATIVE 1

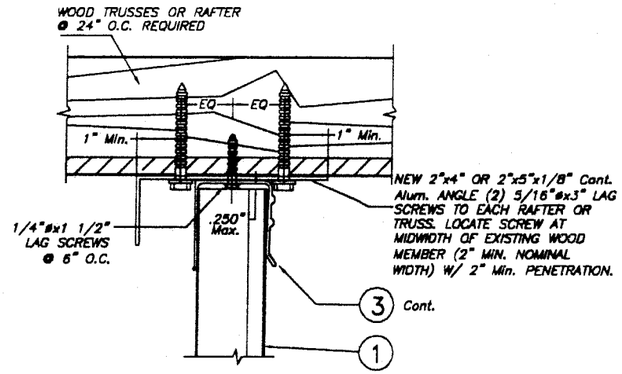

ALTERNATIVE 1

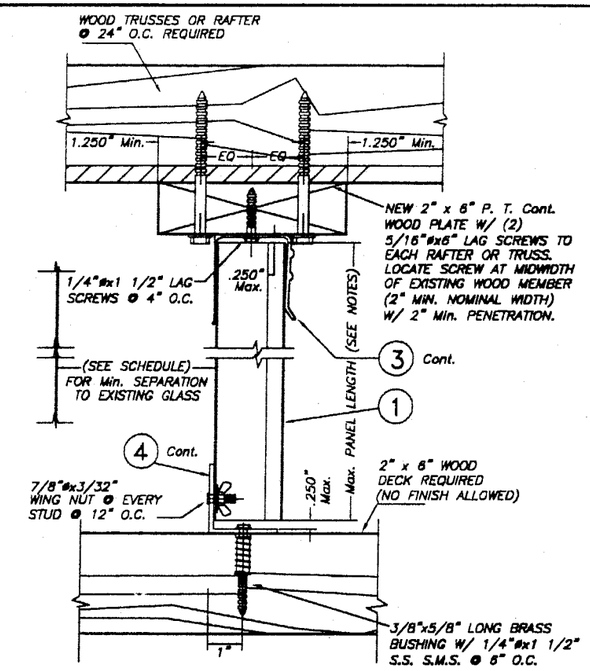

* NOTE : FOR INSTALLATION THAT NEED NOT TO BE REMOVABLE, USE 1/4"øx1 1/2" LAG SCREWS @ 6" O.C.

ALTERNATIVE 2

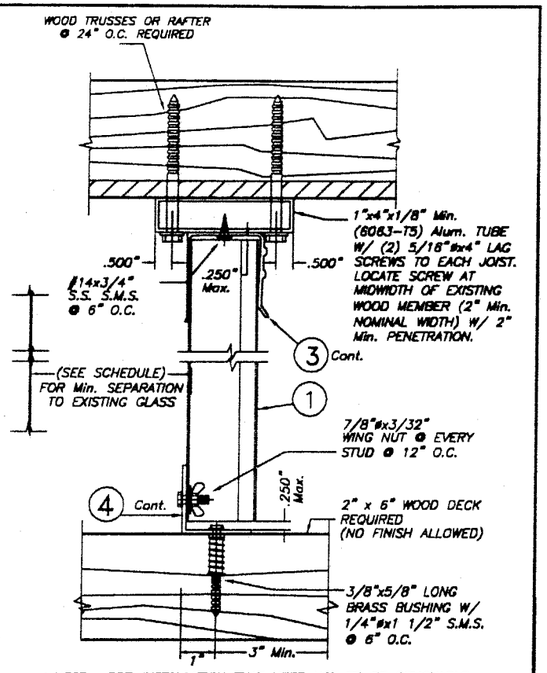

* NOTE : FOR INSTALLATION THAT NEED NOT TO BE REMOVABLE, USE 1/4"øx1 1/2" LAG SCREWS @ 6" O.C.

ALTERNATIVE 3

CEILING & REMOVABLE FLOOR MOUNTING INSTALLATION — SECTION C

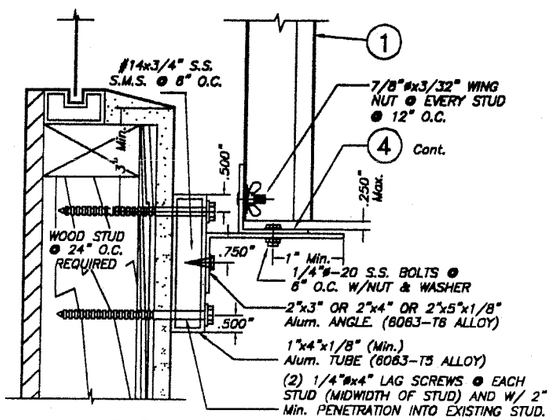

ALTERNATIVE 2

WALL MOUNT. INSTALLAT. (OFFSET) — SECTION B

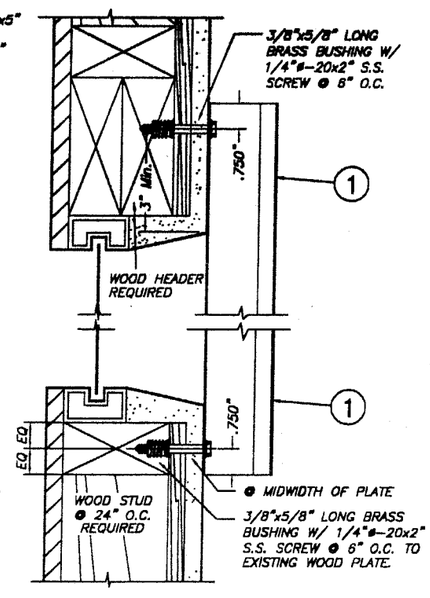

WALL MOUNT. INSTALLATION — SECTION D

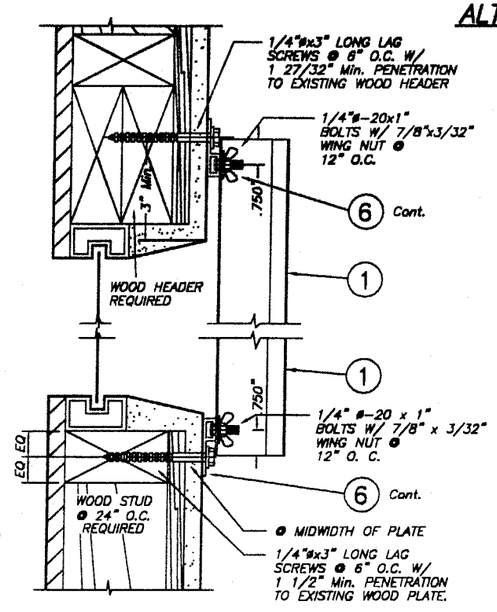

WALL MOUNT. INSTALLATION — SECTION E

INSTALLATION DETAILS ON EXISTING WOOD BUILDINGS

12/19/02

PRODUCT REVISED
as complying with the Florida
Building Code
Acceptance No 03-0206.07
Expiration Date 11/16/2003
By Helmy A. Mola
Miami Dade Product Control
Division

F.B.C.(H.V.H.Z.)/MIAMI-DADE COUNTY

NOTES:

1. INSTALLATIONS ARE ONLY VALID FOR DESIGN WIND LOADS AND PANEL'S SPANS AS SCHEDULEN SHOWN ON SHEET 7 OF 7.
2. NEW 2" x 6" P. T. TO BE SOUTHERN PINE No. 2, SURFACED DRY WITH 19 % M. M. C. W/ SPECIFIC DENSITY OF 0.55.
3. FOR NEW WOOD FRAME CONSTRUCTION: WOOD MEMBERS TO BE SOUTHERN PINE No. 2, W/ SPECIFIC DENSITY OF 0.55 OR EQUAL.

NOTE:
PANEL ① CAN ALTERNATIVELY BE ATTACHED TO WALL W/ ④ TRACK BUT USING 1/4"ø-20x2 1/2" S.S. SCREW @ 6" O.C. W/ 3/8"øx5/8" LONG BRASS BUSHING

NOTE FOR COMBINATION OF SECTIONS:

FLOOR/ WALL/ CEILING MOUNTING SECTIONS CAN BE COMBINED IN ANY WAY TO SUIT ANY INSTALLATION.

TILTECO INC.
TILLIT TESTING & ENGINEERING COMPANY
6595 N.W. 38th. St., Ste. 217, VIRGINIA GARDENS, Fl. 33166
Phone : (305)871-1530 Fax : (305)871-1531
EB-0006719
WALTER A. TILLIT Jr., P. E.
FLORIDA Lic. 44167

STORM PANEL-"STORM GUARD"

ALUMINUM WORLD, INC.
1767 W. 37 STREET UNIT: 18
HIALEAH, FLORIDA 33012

REV. NO	DESCRIPTION	DATE	REV. No	DESCRIPTION	DATE
1	OLD 01-281	12/12/02	3	-	-
2	-	-	4	-	-

SCALE

12/12/02
DATE

02-576
DRAWING No

SHEET 6 OF 7

MAXIMUM DESIGN PRESSURE RATING "W" (p.s.f.) AND CORRESPONDING MAXIMUM SPAN "L" SCHEDULE

MAXIMUM DESIGN LOAD W (p.s.f.)	Max. PANEL SPAN L (ft.)	MINIMUM SEPARATION TO GLASS	APPLICABLE TO SECTIONS # (SEE SHEET 2 & 3 OF 7)
+58.0, −76.0	8'−10 1/4"	2 11/16"	1
+72.0, −72.0	8'−9"	2 1/2"	2
+57.2, −75.7	12'−0"	2 3/4"	2A
+52.0, −56.0	8'−10 1/8"	2 7/8"	3
+50.0, −72.0	7'−7 1/2"	2"	4
+72.0, −72.0	8'−6"	2 1/2"	5
+58.0, −76.0	5'−10"	2 7/8"	6
+72.0, −72.0	8'−3"	2 1/2"	6A

MAXIMUM DESIGN PRESSURE RATING "W" (p.s.f.) AND CORRESPONDING MAXIMUM ANCHOR SPACING SCHEDULE FOR INSTALLATIONS INTO CONCRETE AND C.B.S. STRUCTURES *

MAXIMUM DESIGN LOAD W (p.s.f.)	MAXIMUM ANCHORS SPACING **				APPLICABLE TO SECTIONS #
	TAPCONS		TAMPINS / RAWL CALK−IN		
	TO CONCRETE	TO MASONRY	TO CONCRETE	TO MASONRY	
+58.0, −76.0	6" O. C.	6" O. C.	6" O. C.	6" O. C.	1
+72.0, −72.0	6" O. C.	6" O. C.	6" O. C.	6" O. C.	2
+57.2, −75.7	6" O. C.	6" O. C.	6" O. C.	6" O. C.	2A
+52.0, −56.0	6" O. C.	6" O. C.	6" O. C.	6" O. C.	3
+50.0, −72.0	12" O. C.	−	12" O. C.	−	4
+72.0, −72.0	6" O. C.	6" O. C.	6" O. C.	6" O. C.	5
+58.0, −76.0	−	−	12" ***	12" ***	6
+72.0, −72.0	−	−	12" ***	12" ***	6A

* SEE SHEET 5 & 6 OF 7 FOR ANCHORS TYPE & SPACING FOR INSTALLATIONS INTO WOOD FRAME BUILDINGS.

** MAXIMUM ANCHOR SPACINGS ARE VALID FOR 3 1/2" EDGE DISTANCE. FOR E. D. LESS THAN 3 1/2", REDUCE ANCHOR SPACING BY MULTIPLYING SPACINGS SHOWN ON SCHEDULE BY THE FOLLOWING FACTORS.

ACTUAL E. D.	FACTOR
3"	.86
2 1/2"	.71
2"	.50

*** DIRECT MOUNT CONNECTION TO WALL W/ ANCHORS AT 12" O.C., AND 8'−3" Max. PANEL SPANS SHALL ALWAYS BE PERFORMED W/ 3 1/2" EDGE DISTANCE (E. D.). USE MAXIMUM ANCHORS SPACING OF 6" O.C. FOR DIRECT MOUNT INSTALLATION WHERE E. D. IS LESS THAN 3 1/2" WITH A MINIMUM OF 2 1/2".

E. D. = EDGE DISTANCE

PRODUCT REVISED
as complying with the Florida Buiding Code
Acceptance No 03-0206.07
Expiration Date 11/16/2003
By Helena A. Phelan
Miami Dade Product Control Division

F.B.C.(H.V.H.Z.)/MIAMI−DADE COUNTY

12/12/02

TILTECO INC.
TILLIT TESTING & ENGINEERING COMPANY
6395 N.W. 36th. St., Ste. 217, VIRGINIA GARDENS, Fl. 33166
Phone : (305)871−1530 Fax : (305)871−1531
EB−0006719
WALTER A. TILLIT Jr., P. E.
FLORIDA Lic. 44167

STORM PANEL−"STORM GUARD"

ALUMINUM WORLD, INC.
1767 W. 37 STREET UNIT: 18
HIALEAH, FLORIDA 33012

REV. NO	DESCRIPTION	DATE	REV. No	DESCRIPTION	DATE
1	OLD 01−261	12/12/02	3	−	−
2	−	−	4	−	−

SCALE

12/12/02
DATE

02−576
DRAWING No

SHEET 7 OF 7