MIAMI-DADE

BUILDING CODE COMPLIANCE OFFICE (BCCO)
PRODUCT CONTROL DIVISION

MIAMI-DADE COUNTY, FLORIDA
METRO-DADE FLAGLER BUILDING
140 WEST FLAGLER STREET, SUITE 1603
MIAMI, FLORIDA 33130-1563
(305) 375-2901 FAX (305) 375-2908

NOTICE OF ACCEPTANCE (NOA)

Firedoor Corporation of Florida
1350 N. W. 74th Street
Miami, Fl. 33147

SCOPE:
This NOA is being issued under the applicable rules and regulations governing the use of construction materials. The documentation submitted has been reviewed by Miami-Dade County Product Control Division and accepted by the Board of Rules and Appeals (BORA) to be used in Miami Dade County and other areas where allowed by the Authority Having Jurisdiction (AHJ).

This NOA shall not be valid after the expiration date stated below. The Miami-Dade County Product Control Division (In Miami Dade County) and/or the AHJ (in areas other than Miami Dade County) reserve the right to have this product or material tested for quality assurance purposes. If this product or material fails to perform in the accepted manner, the manufacturer will incur the expense of such testing and the AHJ may immediately revoke, modify, or suspend the use of such product or material within their jurisdiction. BORA reserves the right to revoke this acceptance, if it is determined by Miami-Dade County Product Control Division that this product or material fails to meet the requirements of the applicable building code.

This product is approved as described herein, and has been designed to comply with the High Velocity Hurricane Zone of the Florida Building Code.

DESCRIPTION: Series 4080F Single Flush Outswing Commercial Steel Door-Impact
APPROVAL DOCUMENT: Drawing No. **W02-94** titled "Series 4080F Out-Swing Steel Entrance Door" Sheets 1 through 4 of 4, prepared by Al-Farooq Corporation, dated 10-10-02 and last revised on 05-08-03, signed and sealed by Dr. Humayuon Farooq, P. E., bearing the Miami-Dade County Product Control Approval stamp with the Notice of Acceptance number and approval date by the Miami-Dade County Product Control Division.

MISSILE IMPACT RATING: Large Missile Impact Resistant

LABELING: Each unit shall bear a permanent label with the manufacturer's name or logo, city, state and following statement: "Miami-Dade County Product Control Approved", unless otherwise noted herein.
RENEWAL of this NOA shall be considered after a renewal application has been filed and there has been no change in the applicable building code negatively affecting the performance of this product.
TERMINATION of this NOA will occur after the expiration date or if there has been a revision or change in the materials, use, and/or manufacture of the product or process. Misuse of this NOA as an endorsement of any product, for sales, advertising or any other purposes shall automatically terminate this NOA. Failure to comply with any section of this NOA shall be cause for termination and removal of NOA.
ADVERTISEMENT: The NOA number preceded by the words Miami-Dade County, Florida, and followed by the expiration date may be displayed in advertising literature. If any portion of the NOA is displayed, then it shall be done in its entirety.
INSPECTION: A copy of this entire NOA shall be provided to the user by the manufacturer or its distributors and shall be available for inspection at the job site at the request of the Building Official.
This NOA # **03-0206.15** consists of this page 1 as well as approval document mentioned above.
The submitted documentation was reviewed by **Ishaq I. Chanda, P.E.**

5/22/13

PRODUCT CONTROL ACCEPTED

Firedoor Corporation of Florida

NOTICE OF ACCEPTANCE: EVIDENCE SUBMITTED
(For File ONLY. Not part of NOA)

A. DRAWINGS

1. Manufacturers die drawings and sections.
2. Drawing No. **W02-94** titled "Series 4080F Out-Swing Steel Entrance Door" Sheets 1 through 4 of 4, prepared by Al-Farooq Corporation, dated 10-10-02 and last revised on 05-08-03, signed and sealed by Dr. Humayuon Farooq, P. E.

B. TESTS

1. Test reports on 1) Air Infiltration Test, per PA 202-94
   2) Uniform Static Air Pressure Test, Loading per PA 202-94
   3) Water Resistance Test, per PA 202-94(Not Performed)
   4) Large Missile Impact Test, SFBC PA 201-94
   5) Cyclic Loading Test, per SFBC PA 203-94

   along with installation diagram of an steel storefront system marked-up by Fenestration Testing Laboratories, Inc. Test Reports Nos. **FTL 3211 (FTL01144),** dated 12/13/01, signed and sealed by Luis A. Fegueredo, P.E.

C. CALCULATIONS

1. Anchor Calculations and structural analysis, prepared by Al-Farooq Corporation, dated 12-21-02, 04-04-2003 and last revised on 05-08-03, signed and sealed by Dr. Humayuon Farooq, P.E.

D. MATERIAL CERTIFICATIONS

1. Tensile test report prepared by ATC Associate Inc., report No. FTL3211 (011444), dated March 05,2002 for Steel samples, tested per ASTM E-A370-97-a, signed and sealed by Luis A. Figueredo, P.E.
2. Notice of Acceptance No. 01-1108.09 issued to Apache Products Company for "EPS-Expanded Polystyrene Insulation", expiring on 01/11/2007.

E. STATEMENTS

1. Statement Letter of conformance and letter of "No financial interest to test Lab" issued by Al-Farooq Corporation, both letters dated January 06, 2003, signed and sealed by Dr. Humayuon Farooq, P.E.
2. Statement letter of compliance, as part of above referenced test report, issued by Fenestration testing laboratory.

F. OTHER

1. None

Ishaq I. Chanda

Ishaq I.Chanda, P.E.
Product Control Examiner
NOA No 03-0206.15
Expiration Date: June 12, 2008
Approval Date: June 12, 2003

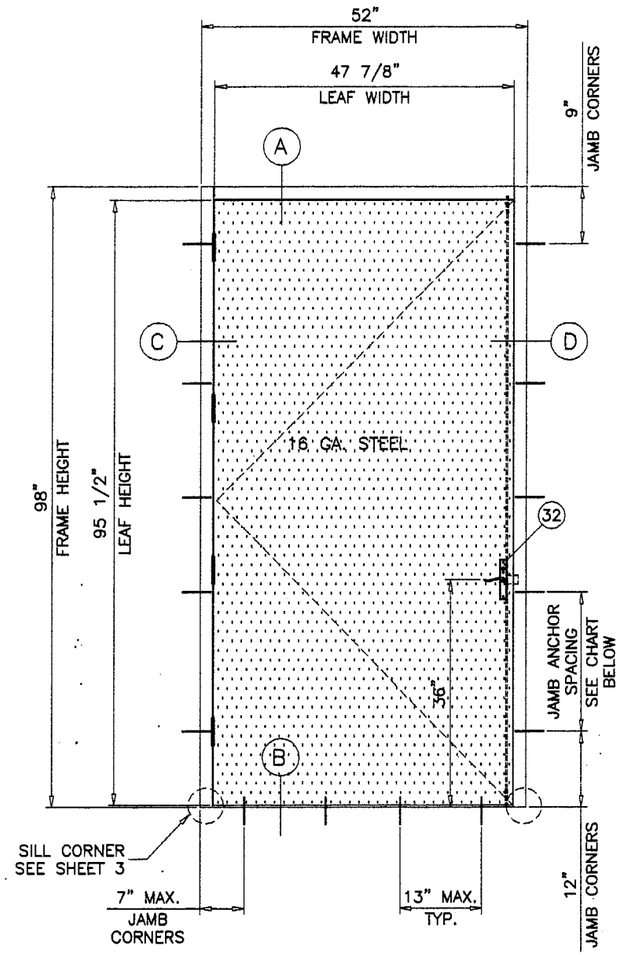

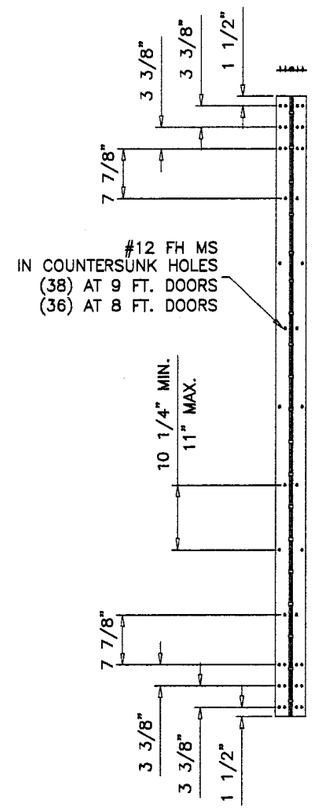

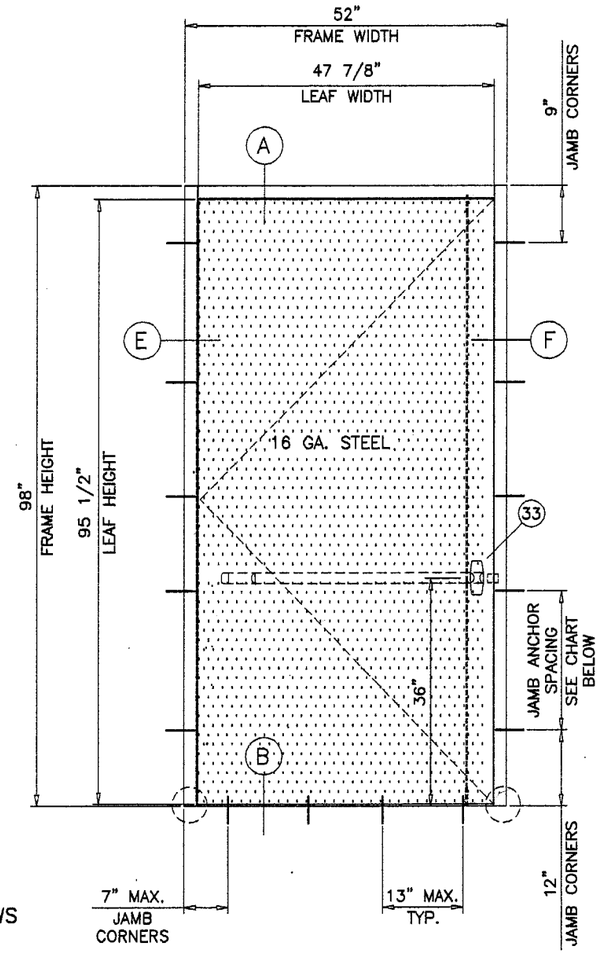

TYPICAL ELEVATION
TESTED UNITS

DESIGN LOAD CAPACITY - PSF
NOT APPROVED WHERE WATER INFILTRATION RESISTANCE IS REQUIRED

	ANCHORS TYPE 'A'						ANCHORS TYPE 'B'						ANCHORS TYPE 'C'	
	AT 12" O.C.		AT 18" O.C.		AT 22" O.C.		AT 12" O.C.		AT 18" O.C.		AT 22" O.C.		AT 22" O.C.	
FRAME WIDTH	EXT.(+)	INT.(-)	EXT.(+)	INT.(-)	EXT.(+)	INT.(-)	EXT.(+)	INT.(-)	EXT.(+)	INT.(-)	EXT.(+)	INT.(-)	EXT.(+)	INT.(-)
36"	200.0	200.0	151.0	151.0	124.0	124.0	200.0	200.0	200.0	200.0	173.0	173.0	200.0	200.0
42"	194.0	194.0	130.0	130.0	106.0	106.0	200.0	200.0	182.0	182.0	149.0	149.0	200.0	200.0
48"	170.0	170.0	113.0	113.0	93.0	93.0	200.0	200.0	159.0	159.0	130.0	130.0	200.0	200.0
52"	157.0	157.0	105.0	105.0	86.0	86.0	200.0	200.0	147.0	147.0	120.0	120.0	200.0	200.0

SEE SHEET 2 FOR DESCRIPTION OF ANCHORS TYPE 'A' 'B' OR 'C'.

SERIES-4080F OUT-SWING STEEL ENTRANCE DOOR

THIS PRODUCT RATED FOR LARGE MISSILE IMPACT.
SHUTTERS ARE NOT REQUIRED.

MAX. DESIGN LOAD RATING FOR THESE DOORS IS AS PER CHART AT RIGHT FOR SIZES SHOWN OR SMALLER.

THIS PRODUCT IS DESIGNED TO COMPLY WITH THE HIGH VELOCITY HURRICANE ZONE OF THE 2001 FLORIDA BUILDING CODE.
ALSO FOR WIND LOADS AS PER ASCE 7-88. ASCE 7-93, ASCE 7-95 OR ASCE 7-98 AS REQUIRED BY PREVAILING BUILDING CODE.

WOOD BUCKS BY OTHERS, MUST BE ANCHORED PROPERLY TO TRANSFER LOADS TO THE STRUCTURE.

ANCHORS SHALL BE AS LISTED, SPACED AS SHOWN ON DETAILS. ANCHOR EMBEDMENT TO BASE MATERIAL SHALL BE BEYOND WALL DRESSING OR STUCCO.

ANCHORING OR LOADING CONDITIONS NOT SHOWN IN THESE DETAILS ARE NOT PART OF THIS APPROVAL.

Approved as complying with the Florida Building Code
Date: JUNE 12, 2003
NOA# 03-0206.15
Miami Dade Product Control Division
By: Shaq I. Chanda

Engr: DR. HUMAYOUN FAROOQ
STRUCTURES
FLA. PE # 16557
C.A.N. 3538
MAY 12 2003

SERIES-4080F OUT-SWING STEEL ENTRANCE DOOR

FIREDOOR CORPORATION
1350 N.W. 74TH STREET
MIAMI, FL. 33147
TEL.(305) 691-1500 FAX(305) 836-4797

AL-FAROOQ CORPORATION
ENGINEERS, PLANNERS & PRODUCT DESIGN
1235 SW 87 AVE
MIAMI, FLORIDA 33174
TEL. (305) 264-8100 FAX. (305) 262-6978
COMP-ANL\W02-94FDC

revisions:

no	date	by	description
A	03.02.04		REV. PER BCCO COMMENTS
B	05.08.03		REV. PER BCCO COMMENTS

date: 10-10-02
scale: 1/2"=1'-0"
dr. by: HAMID
chk. by:

drawing no.
W02-94

sheet 1 of 4

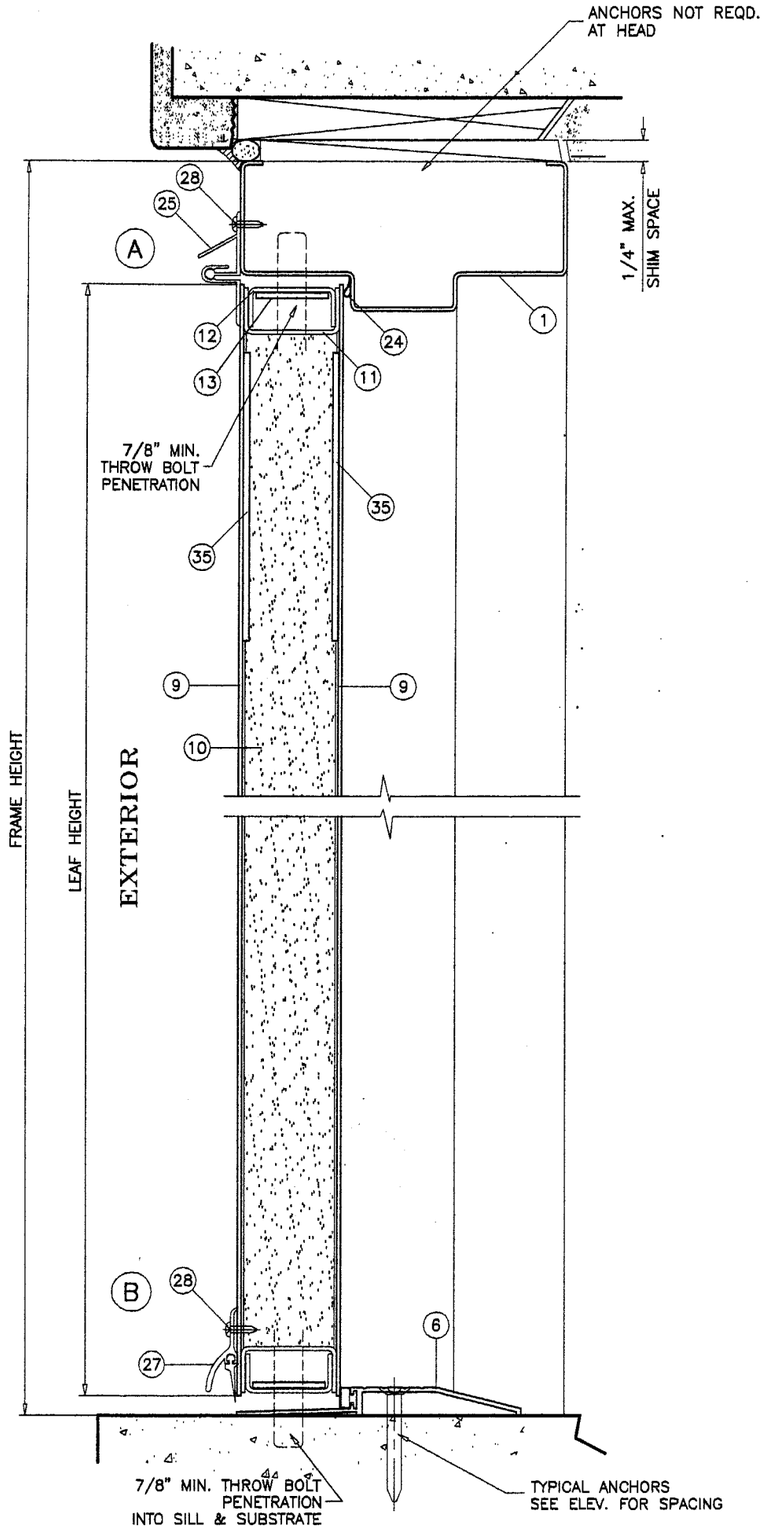

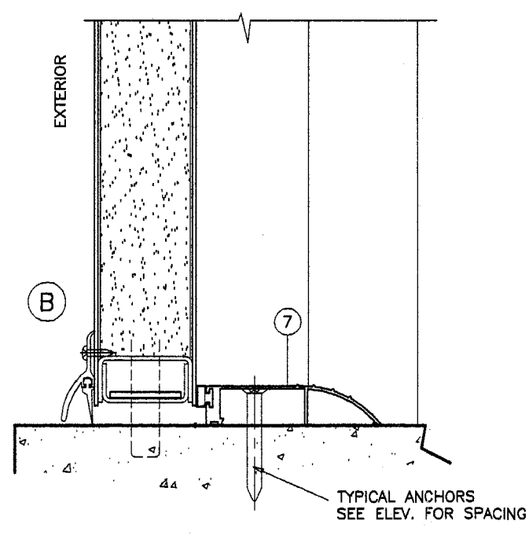

LOCK OPTIONS:

OPTION #1:

THREE POINT MORTISE LOCKSET SYSTEM BY 'SECURITECH'
WITH 5/8" DIA. ST. STEEL BOLTS AT TOP & BOTTOM
ENGAGING IN (1.107" X .075" X 2.232") STL. STRIKE PLATES
IN FRAME HEAD AND SILL AT BOLT LOCATIONS
AND DEAD BOLT LOCK AT 36" FROM BOTTOM
ENGAGING (1-7/8" X 4-7/8") STL. STRIKE PLATE
IN FRAME JAMB AT BOLT LOCATION.
KEY OPERATED ON EXTERIOR AND THUMB TURN ON INTERIOR

OPTION #2:

THREE POINT SURFACE MOUNT PANIC EXIT DEAD LOCK SYSTEM
8444-SBO-HD BY 'SECURITECH' AT 36" FROM BOTTOM.
ENGAGING IN STEEL STRIKE PLATES IN FRAME HEAD & SILL
AT BOLT LOCATIONS.
(2" X 4-7/8" X 1/16") STL. STRIKE PLATE IN FRAME JAMB

WOOD BUCKS AND METAL STRUCTURES NOT BY FIREDOOR MUST SUPPORT LOADS IMPOSED BY GLAZING SYSTEM AND TRANSFER THEM TO THE BUILDING STRUCTURE.

TYPICAL ANCHORS @ JAMB: SEE ELEV. FOR SPACING

ANCHORS TYPE 'A'
3/8" DIA. RAWL TAPPER
THRU 1BY OR 2BY WOOD BUCKS INTO MASONRY
1-1/4" MIN. EMBED INTO MASONRY

ANCHORS TYPE 'B'
3/8" DIA. RAWL TAPPER
DIRECTLY INTO MASONRY (HOLLOW BLOCK OR CONC.)
1-1/4" MIN. EMBED INTO MASONRY

ANCHORS TYPE 'C'
3/8" DIA. SLEEVE ANCHOR HILTI
DIRECTLY INTO MASONRY (HOLLOW BLOCK OR CONC.)
1-1/4" MIN. EMBED INTO MASONRY

3/8" SMS OR MACHINE BOLTS (MIN. GRADE 2 CRS)
INTO METAL STRUCTURES
(STEEL OR ALUMINUM 1/8" MIN. THICK.)

STEEL : Fy = 36 KSI MIN.
ALUMINUM : 6063-T5 MIN.

TYPICAL ANCHORS @ THRESHOLD: SEE ELEV. FOR SPACING

3/16" DIA. RAWL TAPPER
DIRECTLY INTO MASONRY
WITH 1-1/2" MIN. EMBED. INTO CONC. OR MASONRY

SEALANT:

FRAME CORNERS SEALED WITH SILICONE.

Approved as complying with the Florida Buiding Code
Date JUNE 12, 2003
NOA# 03-0206.15
Miami Dade Product Control Division
By Ishaq I. Chanda

Engr: DR. HUMAYOUN FAROOQ
STRUCTURES
FLA. PE # 16557
C.A.N. 3538
MAY 12 2003

AL-FAROOQ CORPORATION
ENGINEERS, PLANNERS & PRODUCT DESIGN
1235 SW 87 AVE
MIAMI, FLORIDA 33174
TEL (305) 264-8100 FAX. (305) 262-6978
COMP-ANL\W02-94FDC

SERIES-4080F OUT-SWING STEEL ENTRANCE DOOR

FIREDOOR CORPORATION
1350 N.W. 74TH STREET
MIAMI, FL. 33147
TEL.(305) 691-1500 FAX(305) 836-4797

revisions:

no	date	by	description
A	03.02.04		REV. PER BCCO COMMENTS
B	05.08.03		REV. PER BCCO COMMENTS

date: 10-10-02
scale: 3/8" = 1"
dr. by: HAMID
chk. by:

drawing no.
W02-94

sheet 2 of 4

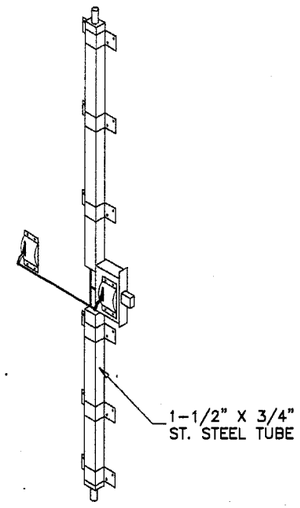

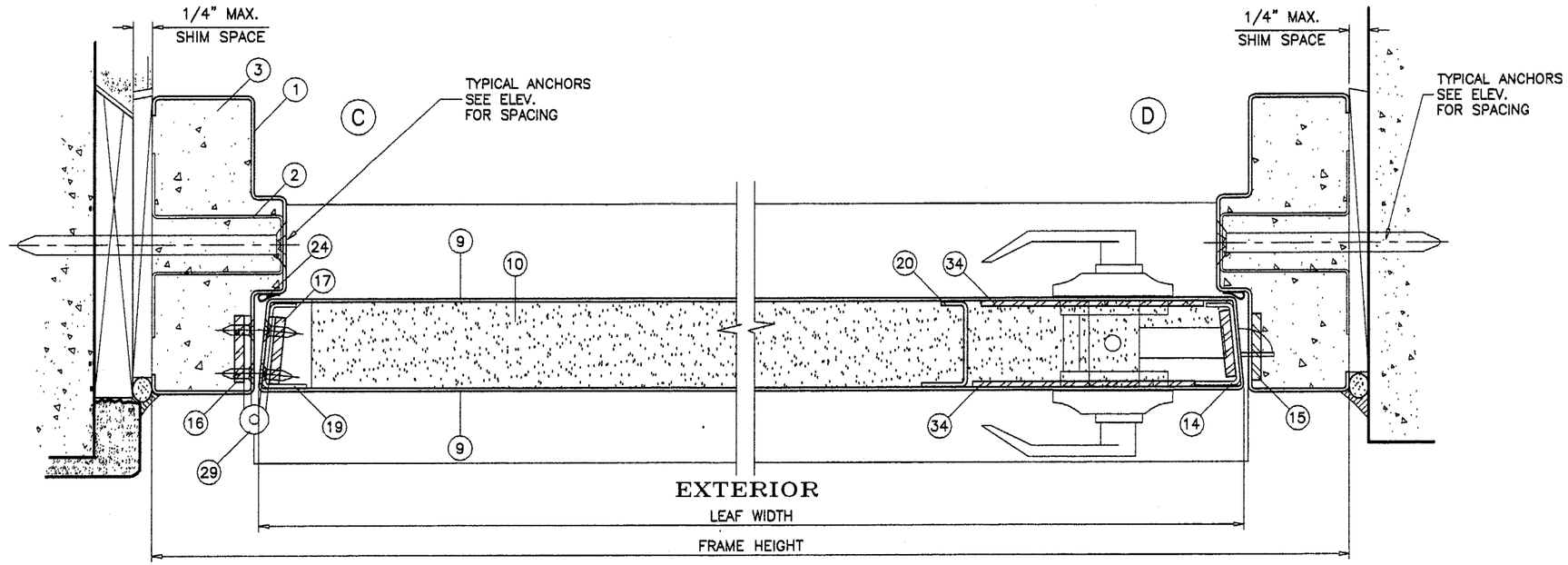

PANIC DEVICE:

ST. STEEL ROD, BOLT & CHANNEL ASSEMBLY WITH MULTIPLE BRACKETS AND THRU BOLT PLATES INSTALLED WITHIN DOOR ABOVE AND BELOW PANIC BAR.
5/8" DIA. X 10" LONG ST. STEEL BOLTS TRAVEL IN CHANNELS SURFACE APPLIED TO INTERIOR FACE OF THE DOOR.
(6) 'U' SHAPED CHANNEL MOUNTING BRACKETS FASTENED WITH 1/4-20 MS FOUR PER BRACKET.

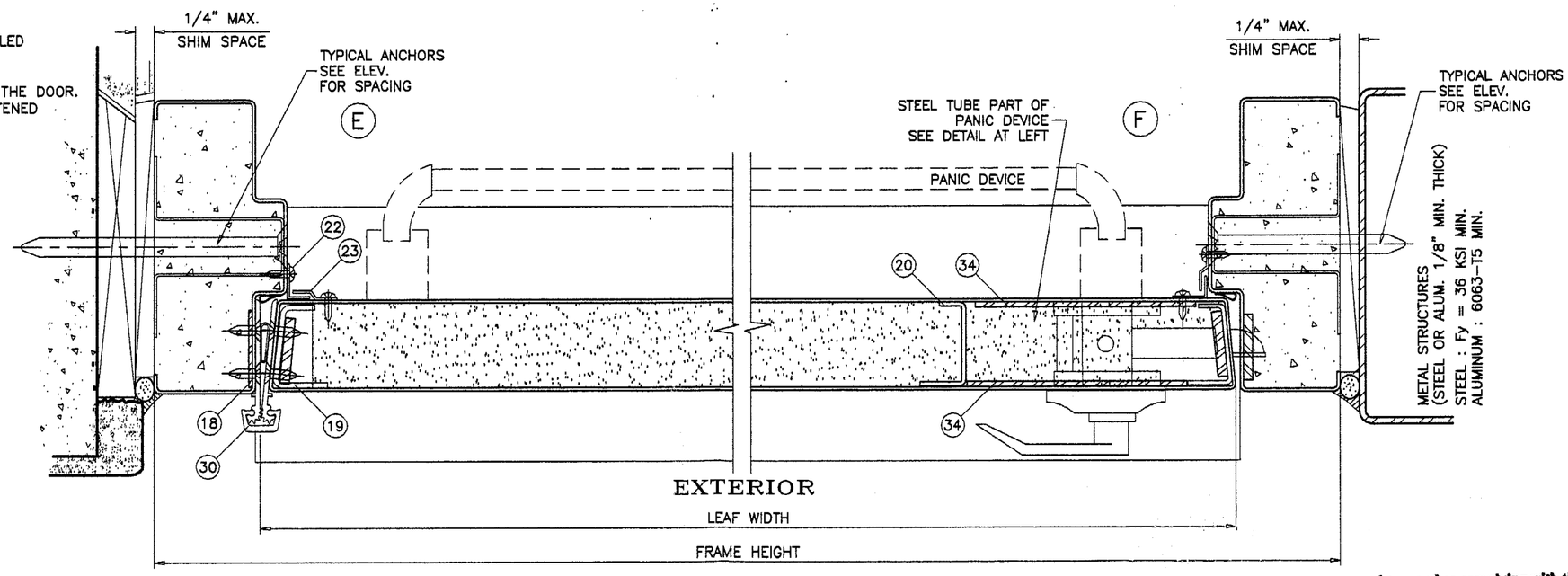

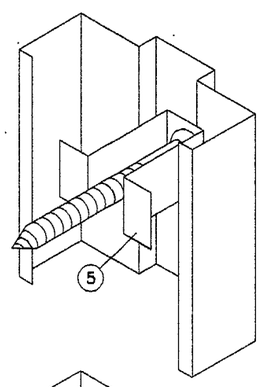

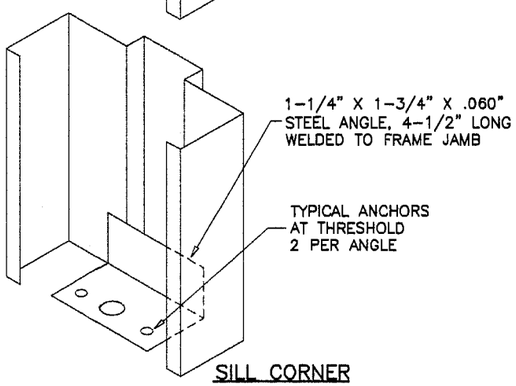

SILL CORNER

Engr: DR. HUMAYOUN FAROOQ
STRUCTURES
FLA. PE # 16557
C.A.N. 3538
MAY 1 2 2003

Approved as complying with the Florida Building Code
Date JUNE 12, 2003
NOA# 03-0206.15
Miami Dade Product Control Division
By Ishaq I. Chanda

AL-FAROOQ CORPORATION
ENGINEERS, PLANNERS & PRODUCT DESIGN
1235 SW 87 AVE
MIAMI, FLORIDA 33174
TEL. (305) 264-8100 FAX. (305) 262-6978

COMP-ANL\W02-94FDC

SERIES-4080F OUT-SWING STEEL ENTRANCE DOOR

FIREDOOR CORPORATION
1350 N.W. 74TH STREET
MIAMI, FL. 33147
TEL.(305) 691-1500 FAX(305) 836-4797

revisions:

no	date	by	description
A	03.02.04		REV. PER BCCO COMMENTS
B	05.08.03		REV. PER BCCO COMMENTS

date: 10-10-02
scale: 3/8" = 1"
dr. by: HAMID
chk. by:

drawing no.
W02-94

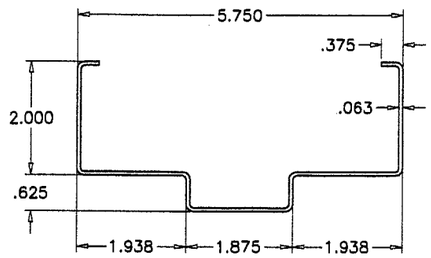

FRAME HEAD/JAMB

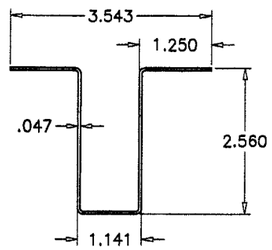

ANCHOR SPACER

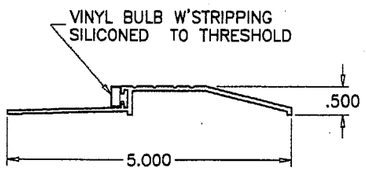

BUMPER THRESHOLD

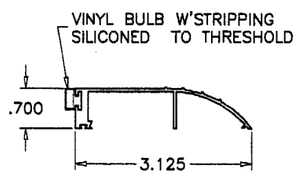

ALTERNATE THRESHOLD

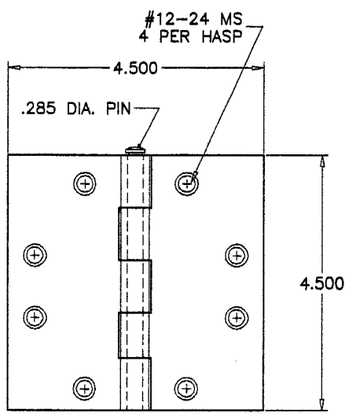

.134" THICK STEEL HINGE

ITEM NO.	PART NO.	QUANTITY	DESCRIPTION	MATERIAL	MANF./SUPPLIER/REMARKS
1	–	AS REQD.	FRAME HEAD/JAMB	STEEL	16 GA. (.062") MIN. Fy=46,000, Fu=55,000
2	–	AS REQD.	ANCHOR SPACER	STEEL	2-1/2" X 2-1/2" X 18 GA.
3	–	AS REQD.	FRAME GROUT	CONC.	3000 PSI MIN.
5	–	1	BUMPER THRESHOLD	ALUMINUM	HAGER
6	477S	1	BUMPER THRESHOLD	ALUMINUM	HAGER
7	435S	1	ALTERNATE THERSHOLD	ALUMINUM	HAGER
9	–	2	DOOR PANEL	STEEL	16 GA. (.060") MIN. Fy = 42,000
10	–	–	POLYSTYRENE CORE	–	APACHE, HOLDING CURRENT NOA
11	–	2	TOP & BOTTOM CHANNEL, 47-3/4" LONG	STEEL	(.810" X 1.678" X .810" X .075 THK.)
12	–	2	TOP & BOTTOM CHANNEL, 47-3/4" LONG	STEEL	(.685" X 1.530" X .685" X .075" THK.)
13	–	2	TOP & BOTTOM BAR REINFORCING, 47-3/4" LONG	STEEL	(1.270" X .10" THK.)
14	–	2	LOCK REINFORCEMENT, 27" LONG	STEEL	(.518" X 1.585" X .90" X .075 THK.)
15	–	1	STRIKE REINFORCEMENT	STEEL	(1-3/8" X 6-7/16" X .093" THK.)
16	–	–	FRAME HINGE REINFORCEMENT	STEEL	(1.270" X .170" X 10" LONG)
17	–	4	DOOR HINGE REINFORCEMENT	STEEL	(1.270" X .170" X 10" LONG)
18	–	1	ROTON HINGE REINFORCEMENT	STEEL	(1.518" X .075" X 97" LONG)
19	–	1	DOOR EDGE CHANNEL, 93" LONG	STEEL	(7/8" X 1-5/8" X 1/2" X .075" THK.)
20	–	1	DOOR REINFORCING CHANNEL, FULL LENGTH	STEEL	(7/8" X 1-5/8" X 1/2" X .075" THK.)
22	#8 X 1/2"	AS REQD.	SELF DRILLING SCREWS	–	AT 8" O.C.
23	713S/715S	2	INTERLOCKING WEATHERSTRIPPING	ALUMINUM	HAGER
24	726S	AS REQD.	JAMB WEATHERSTRIPPING (1/2" X 1/4")	VINYL	HAGER, ADHESIVE BACK
25	717S/718S	AS REQD.	INTERLOCKING WEATHERSTRIPPING	VINYL	HAGER
27	770S-V	1	DOOR BOTTOM SWEEP	ALUM/VINYL	HAGER
28	#10 X 3/4"	AS REQD.	SELF DRILLING SCREWS	–	AT 8" O.C. MAX.
29	1279	4/ LEAF	MORTISE HINGES (4-1/2" LONG)	STEEL	HAGER, AT 25-1/2" O.C. MAX.
30	780-224/112	1	ROTON HINGE	STEEL	HAGER
32	5411-HD-F13	1	3PT MORTISE LOCKSET	STEEL	SECURITECH
33	8444-SBS-HD	1	3PT PANIC EXIT DEADLOCK SYSTEM	STEEL	SECURITECH
34	–	2	REINFORCEMENT PLATES	STEEL	(4.365" X 4.390" X .105" THK.)
35	–	2	REINFORCEMENT BARS	STEEL	(5.050" X .105" X 44" LONG)

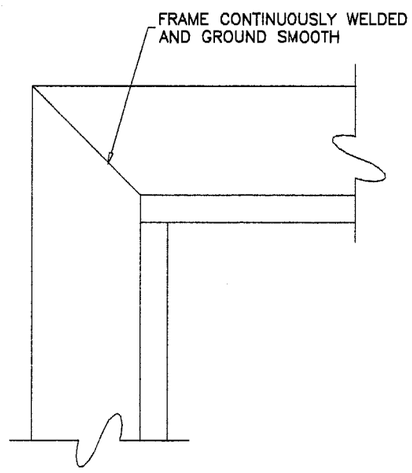

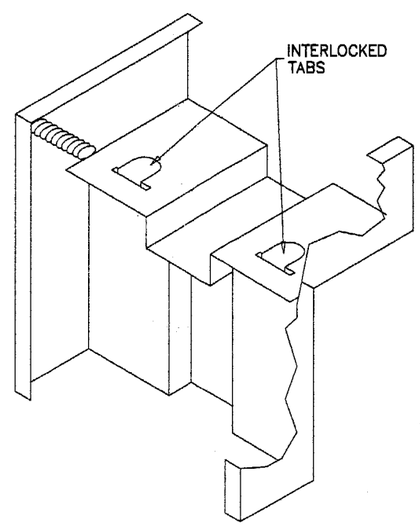

FRAME CORNERS

Approved as complying with the Florida Building Code
Date JUNE 12, 2003
NOA# 03-0206.15
Miami Dade Product Control Division
By Shaggi Chanda

Engr: DR. HUMAYOUN FAROOQ
STRUCTURES
FLA. PE # 16557
C.A.N. 3538

MAY 1 2 2003

AL-FAROOQ CORPORATION
ENGINEERS, PLANNERS & PRODUCT DESIGN
1235 SW 87 AVE
MIAMI, FLORIDA 33174
TEL (305) 264-8100 FAX. (305) 262-6978
COMP-ANL\W02-94FDC

SERIES-4080F OUT-SWING STEEL ENTRANCE DOOR

FIREDOOR CORPORATION
1350 N.W. 74TH STREET
MIAMI, FL. 33147
TEL.(305) 691-1500 FAX(305) 836-4797

revisions:

no	date	by	description
A	03.02.04		REV. PER BCCO COMMENTS
B	05.08.03		REV. PER BCCO COMMENTS

date: 10-10-02
scale: 3/8" = 1"
dr. by: HAMID
chk. by:

drawing no.
W02-94

sheet 4 of 4