MIAMI-DADE

BUILDING CODE COMPLIANCE OFFICE (BCCO)
PRODUCT CONTROL DIVISION

MIAMI-DADE COUNTY, FLORIDA
METRO-DADE FLAGLER BUILDING
140 WEST FLAGLER STREET, SUITE 1603
MIAMI, FLORIDA 33130-1563
(305) 375-2901 FAX (305) 375-2908

NOTICE OF ACCEPTANCE (NOA)

GAF Materials Corporation
1361 Alps Road.
Wayne, NJ 07470

SCOPE:

This NOA is being issued under the applicable rules and regulations governing the use of construction materials. The documentation submitted has been reviewed by Miami-Dade County Product Control Division and accepted by the Board of Rules and Appeals (BORA) to be used in Miami Dade County and other areas where allowed by the Authority Having Jurisdiction (AHJ).

This NOA shall not be valid after the expiration date stated below. The Miami-Dade County Product Control Division (In Miami Dade County) and/or the AHJ (in areas other than Miami Dade County) reserve the right to have this product or material tested for quality assurance purposes. If this product or material fails to perform in the accepted manner, the manufacturer will incur the expense of such testing and the AHJ may immediately revoke, modify, or suspend the use of such product or material within their jurisdiction. BORA reserves the right to revoke this acceptance, if it is determined by Miami-Dade County Product Control Division that this product or material fails to meet the requirements of the applicable building code.

This product is approved as described herein, and has been designed to comply with the High Velocity Hurricane Zone of the Florida Building Code.

DESCRIPTION: GAF Marquis Weathermax and GAF Marquis Shingle

LABELING: Each unit shall bear a permanent label with the manufacturer's name or logo, city, state and following statement: "Miami-Dade County Product Control Approved", unless otherwise noted herein.

RENEWAL of this NOA shall be considered after a renewal application has been filed and there has been no change in the applicable building code negatively affecting the performance of this product.

TERMINATION of this NOA will occur after the expiration date or if there has been a revision or change in the materials, use, and/or manufacture of the product or process. Misuse of this NOA as an endorsement of any product, for sales, advertising or any other purposes shall automatically terminate this NOA. Failure to comply with any section of this NOA shall be cause for termination and removal of NOA.

ADVERTISEMENT: The NOA number preceded by the words Miami-Dade County, Florida, and followed by the expiration date may be displayed in advertising literature. If any portion of the NOA is displayed, then it shall be done in its entirety.

INSPECTION: A copy of this entire NOA shall be provided to the user by the manufacturer or its distributors and shall be available for inspection at the job site at the request of the Building Official.

This NOA consists of pages 1 through 3.
The submitted documentation was reviewed by Frank Zuloaga, RRC

PRODUCT CONTROL ACCEPTED

ROOFING ASSEMBLY APPROVAL

Category:	Roofing
Sub-Category:	07310 Asphalt Shingles
Materials	3-Tab
Deck Type:	Wood

1. SCOPE

This renews GAF Marquis Weathermax and GAF Marquis Shingle as manufactured by GAF Materials Corp described in Section 2 of this Notice of Acceptance.

2. PRODUCT DESCRIPTION

Product	Dimensions	Test Specifications	Product Description
GAF Marquis Weathermax	12" x 36"	PA 110	Fiberglas reinforced heavy weight asphalt roof shingle, with a 3-Tab profile
GAF Marquis	12" x 36"	PA 110	Fiberglas reinforced heavy weight asphalt roof shingle, with a 3-Tab profile

3. EVIDENCE SUBMITTED:

Test Agency	Test Identifier	Test Name/Report	Date
Center for Applied Engineering	PA 100		02/23/94
Underwriters Laboratories, Inc.	PA 107	Modifed ASTM D 3161	04/13/94
Underwriters Laboratories, Inc.	ASTM 3462	ASTM D3462	03/26/94
Center for Applied Engineering		ASTM D3462	04/11/97

4. LIMITATIONS

4.1 Fire classification is not part of this acceptance; refer to a current Approved Roofing Materials Directory for fire ratings of this product.

4.2 Shall not be installed on roof mean heights in excess of 33 ft.

5. INSTALLATION

5.1 Shingles shall be installed in compliance with Roofing Application Standard RAS 115.

5.2 Flashing shall be in accordance with Roofing Application Standard RAS 115

5.3 The manufacturer shall provide clearly written application instructions.

5.4 Exposure and course layout shall be in compliance with Detail 'A', attached.

5.5 Nailing shall be in compliance with Detail 'B', attached.

6. LABELING

6.1 Shingles shall be labeled with the Miami-Dade Logo or the wording "Miami-Dade County Product Control Approved".

7. BUILDING PERMIT REQUIREMENTS

7.1 Application for building permit shall be accompanied by copies of the following:

7.1.1 This Notice of Acceptance.

7.1.2 Any other documents required by the Building Official or the applicable code in order to properly evaluate the installation of this system.

DETAIL A

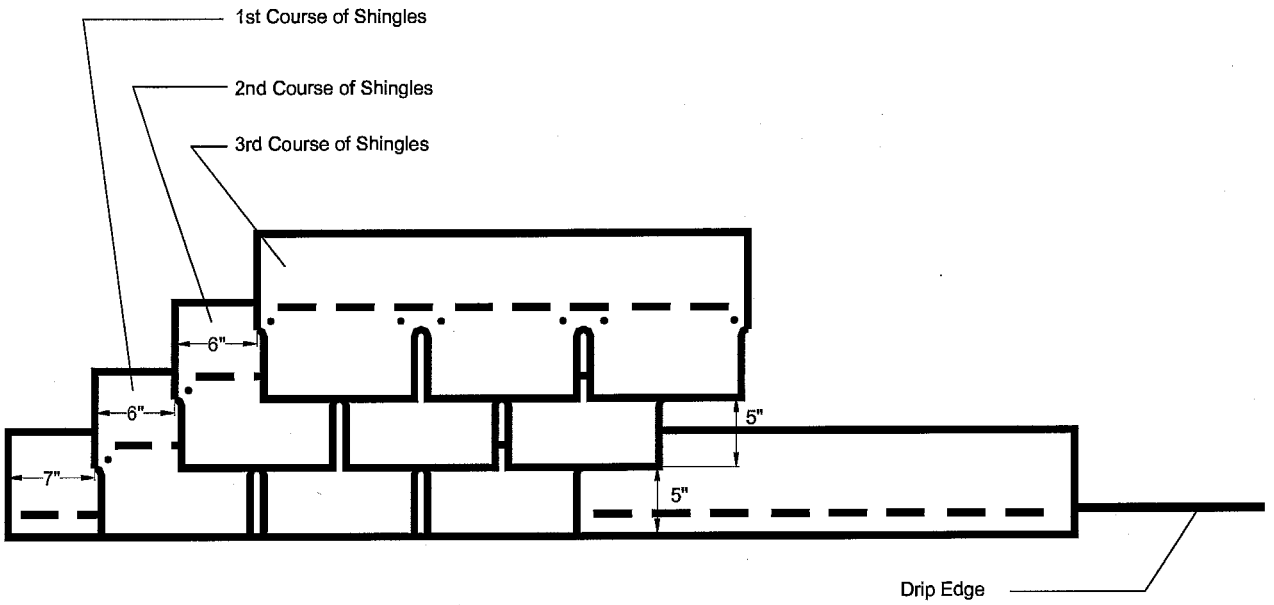

DETAIL B

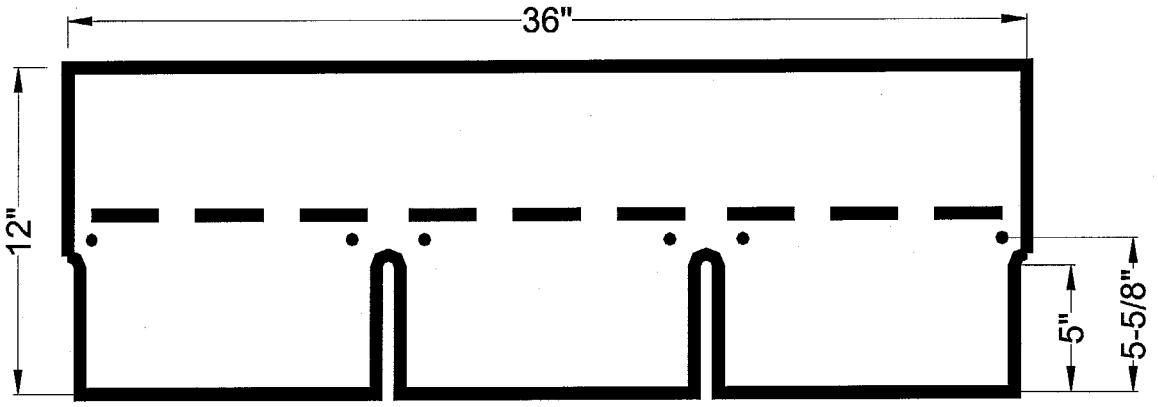

END OF THIS ACCEPTANCE