MIAMI-DADE

BUILDING CODE COMPLIANCE OFFICE (BCCO)
PRODUCT CONTROL DIVISION

MIAMI-DADE COUNTY, FLORIDA
METRO-DADE FLAGLER BUILDING
140 WEST FLAGLER STREET, SUITE 1603
MIAMI, FLORIDA 33130-1563
(305) 375-2901 FAX (305) 375-2908

NOTICE OF ACCEPTANCE (NOA)

Lawson Industries, Inc.
8501 NW 90 St.
Medley, FL 33166

SCOPE:

This NOA is being issued under the applicable rules and regulations governing the use of construction materials. The documentation submitted has been reviewed by Miami-Dade County Product Control Division and accepted by the Board of Rules and Appeals (BORA) to be used in Miami Dade County and other areas where allowed by the Authority Having Jurisdiction (AHJ).

This NOA shall not be valid after the expiration date stated below. The Miami-Dade County Product Control Division (In Miami Dade County) and/or the AHJ (in areas other than Miami Dade County) reserve the right to have this product or material tested for quality assurance purposes. If this product or material fails to perform in the accepted manner, the manufacturer will incur the expense of such testing and the AHJ may immediately revoke, modify, or suspend the use of such product or material within their jurisdiction. BORA reserves the right to revoke this acceptance, if it is determined by Miami-Dade County Product Control Division that this product or material fails to meet the requirements of the applicable building code.

This product is approved as described herein, and has been designed to comply with the High Velocity Hurricane Zone of the Florida Building Code.

DESCRIPTION: Aluminum Tube Mullions w/Steel Reinforcements

APPROVAL DOCUMENT: Drawing No.M95-04B, titled "Aluminum Tube Mullions with Steel Inserts", sheets 1 through 7 of 7, prepared by Al Farooq Corporation, dated 9/28/95 with revision on 2/14/03, signed and sealed by Humayoun Farooq, P.E., bearing the Miami-Dade County Product Control Revision stamp with the Notice of Acceptance number and expiration date by the Miami-Dade County Product Control Division.

MISSILE IMPACT RATING: Large and Small Missile Impact

LABELING: Each unit shall bear a permanent label with the manufacturer's name or logo, city, state and following statement: "Miami-Dade County Product Control Approved", unless otherwise noted herein.

RENEWAL of this NOA shall be considered after a renewal application has been filed and there has been no change in the applicable building code negatively affecting the performance of this product.

TERMINATION of this NOA will occur after the expiration date or if there has been a revision or change in the materials, use, and/or manufacture of the product or process. Misuse of this NOA as an endorsement of any product, for sales, advertising or any other purposes shall automatically terminate this NOA. Failure to comply with any section of this NOA shall be cause for termination and removal of NOA.

ADVERTISEMENT: The NOA number preceded by the words Miami-Dade County, Florida, and followed by the expiration date may be displayed in advertising literature. If any portion of the NOA is displayed, then it shall be done in its entirety.

INSPECTION: A copy of this entire NOA shall be provided to the user by the manufacturer or its distributors and shall be available for inspection at the job site at the request of the Building Official.

This NOA **revises NOA # 02-0501.05** and, consists of this page 1 as well as approval document mentioned above. The submitted documentation was reviewed by **Jaime Eisen, P.E.**

PRODUCT CONTROL ACCEPTED

Lawson Industries, Inc.

NOTICE OF ACCEPTANCE: EVIDENCE SUBMITTED
(For File ONLY. Not part of NOA)

A. DRAWINGS

1. Manufacturer's die drawings and sections.
2. Drawing No.M95-04B, titled "Aluminum Tube Mullions with Steel Inserts", sheets 1 through 7 of 7, prepared by Al Farooq Corporation, dated 9/28/95 with revision on 2/14/03, signed and sealed by Humayoun Farooq, P.E.

B. TESTS

1. Test reports on 1) Large Missile Impact Test per FBC, TAS 201-94
   2) Cyclic Wind Pressure Loading per FBC, TAS 203-94
   along with marked-up drawings and installation diagram of a aluminum sliding glass door, prepared by Hurricane Engineering & Testing, Inc., Test Report No. **HETI-021716**, dated 8/27/02, signed and sealed by Rafael E. Droz-Seda, P.E.
2. Test reports on 1)Uniform Static Air Pressure Test, Loading per FBC, TAS 20294 along with marked-up drawings and installation diagram of a aluminum sliding glass door, prepared by Hurricane Engineering & Testing, Inc., Test Report No. **HETI-021716**, dated 8/27/02, signed and sealed by Rafael E. Droz-Seda, P.E.

Submitted under NOA# 02-0501.05

3. Test reports on 1)Uniform Static Air Pressure Test, Loading per FBC, TAS 20294 along with marked-up drawings and installation diagram of a aluminum sliding glass door, prepared by Fenestration Testing Laboratory, Inc., Test Report No. **FTL-1383**, dated 2/13/96, signed and sealed by Gilbert Diamond, P.E.

B. CALCULATIONS

1. Anchor Calculations, dated 2/14/03, prepared by Al Farooq Corporation, signed and sealed by Humayoun Farooq, P.E.

Submitted under NOA# 02-0501.05

2. Anchor Calculations, dated 9/27/95, prepared by Al Farooq Corporation, signed and sealed by Humayoun Farooq, P.E.

MATERIAL CERTIFICATIONS

1. None.

D. STATEMENTS

2. None.

Jaime Eisen, P.E.
Product Control Examiner
NOA No 03-0225.07
Expiration Date: May 30, 2007
Approval Date: April 17, 2003

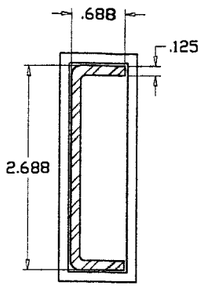

1 X 3
STD. TUBE MULLION
6063-T5

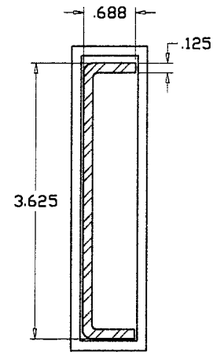

1 X 4
STD. TUBE MULLION
6063-T5

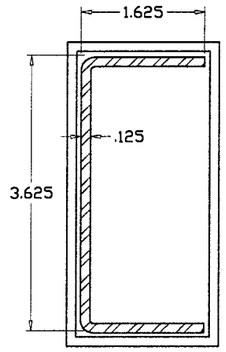

2 X 4
STD. TUBE MULLION
6063-T5

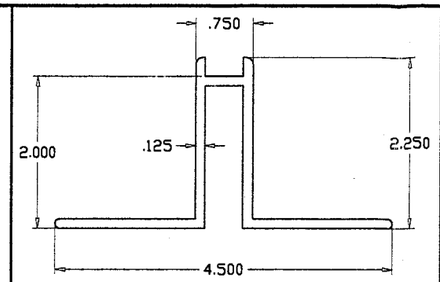

MULLION CLIP
6063-T5

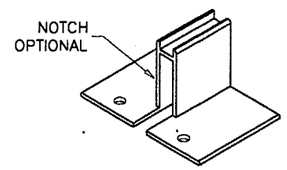

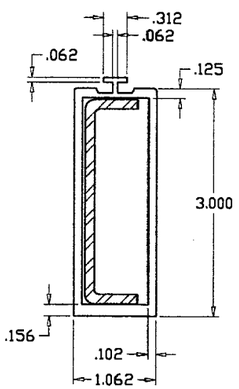

1 X 3
CUSTOM MULLION
6063-T6
(FLANGE FRAME)

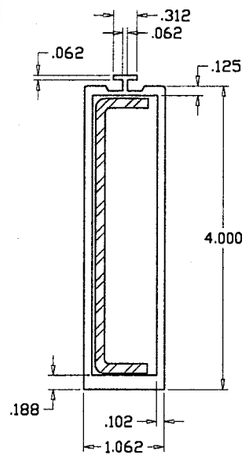

1 X 4
CUSTOM MULLION
6063-T6
(FLANGE FRAME)

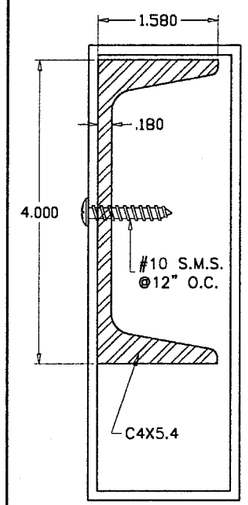

2 X 6
STD. TUBE MULLION
6063-T5

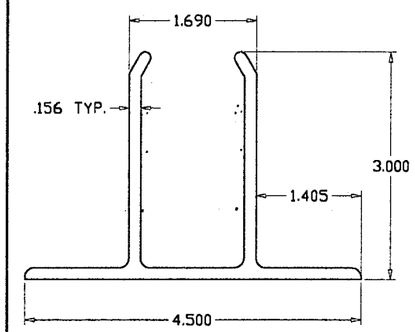

MULLION CLIP
6063-T6

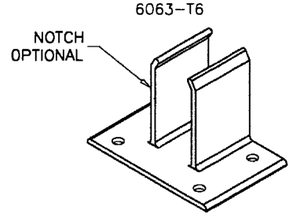

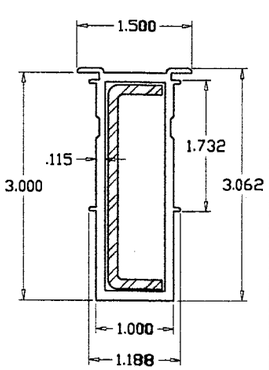

1 X 3
CUSTOM MULLION
6063-T5
(FIN FRAME)

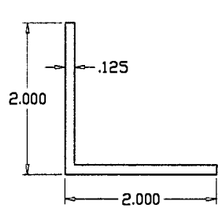

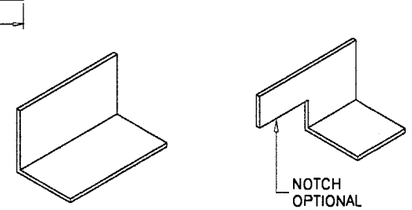

ANGLE CLIP
6063-T5

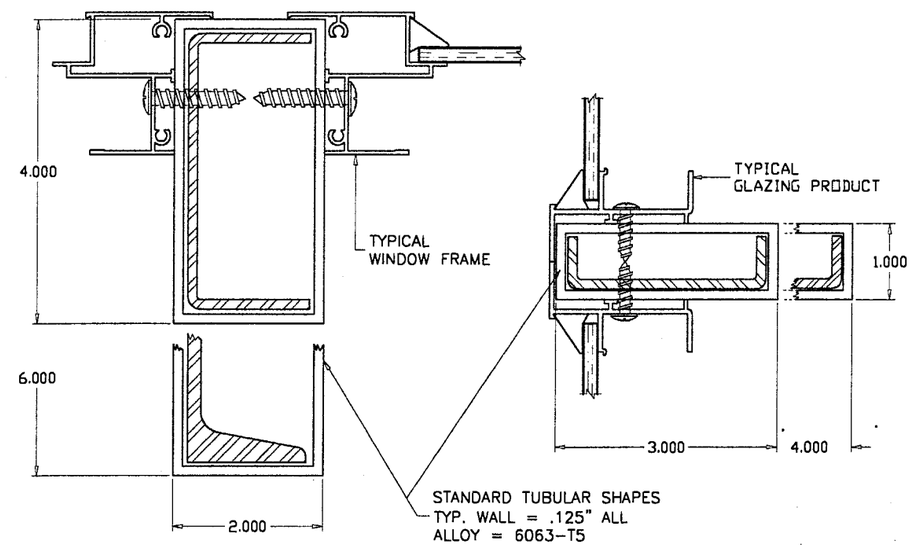

MULLIONS CONTAINING TYPICAL GLAZING PRODUCTS HORIZONTAL OR VERTICAL

SEE WINDOW OR DOOR APPROVAL FOR FASTENERS SIZES AND SPACING

THESE MULLIONS ARE RATED FOR LARGE MISSILE IMPACT

RECTANGULAR ALUM TUBE MULLIONS WITH STEEL INSERTS USING PROPERTIES FOR STEEL & ALUM TUBES

NOTES:

1. THIS PRODUCT IS DESIGNED TO COMPLY WITH THE HIGH VELOCITY HURRICANE ZONE OF THE 2001 FLORIDA BUILDING CODE. ALSO FOR WIND LOADS AS PER ASCE 7 USING CORRESPONDING LOADS.
2. ALL GLAZING PRODUCTS USED WITH THESE MULLIONS MUST MEET THE APPLICABLE BUILDING CODE REQUIREMENTS I.E: WIND LOAD, WATER INFILTRATION, FORCED ENTRY RESISTANCE, SAFEGUARDS ETC.
3. WOOD BUCKS BY OTHERS, MUST BE ANCHORED PROPERLY TO TRANSFER LOADS TO THE STRUCTURE.
4. ANCHORS SHALL BE AS LISTED, SPACED AS SHOWN ON DETAILS, EMBEDMENT TO BASE MATERIAL SHALL BE BEYOND WALL COVERING (STUCCO, TILE ETC.).
5. ANCHORING CONDITIONS OTHER THAN THOSE SHOWN IN THESE DETAILS ARE NOT PART OF THIS APPROVAL.

INSTRUCTIONS:

USE CHARTS AND GRAPHS AS FOLLOWS.

STEP 1 DETERMINE DESIGN LOAD REQUIRED PER ASCE 7 FOR PARTICULAR OPENING.

STEP 2 USE APPROVED GLAZING PRODUCTS MEETING ABOVE LOAD REQUIREMENTS.

STEP 3 USE CONNECTION TO MULLION AS PER PRODUCT APPROVAL.

STEP 4 SPECIFY MAXIMUM SHIM SPACING.

STEP 5 USING CHARTS ON SHEET 2 SELECT MULLION SIZE WITH DESIGN RATING MORE THAN DESIGN LOAD SPECIFIED IN STEP 1 ABOVE.

STEP 6 USING ANCHOR TYPES ON SHEET 4 THRU 7 AND ANCHOR CHARTS ON SHEET 3, SELECT ANCHOR TYPE WITH DESIGN RATING MORE THAN THE DESIGN LOADS SPECIFIED IN STEP 1 ABOVE.

Engr: DR. HUMAYOUN FAROOQ
STRUCTURES
FLA. PE # 16557

FEB 14 2003

PRODUCT REVISED
as complying with the Florida Building Code
Acceptance No 03-0225.07
Expiration Date 05/30/07
By
Miami-Dade Product Control Division

AL-FAROOQ CORPORATION
ENGINEERS, PLANNERS & PRODUCT DESIGN
1235 SW 87 AVE
MIAMI, FLORIDA 33174
TEL. (305) 264-8100 FAX. (305) 262-6978

MULLION\M95-04B-N

ALUMINUM TUBE MULLIONS WITH STEEL INSERTS

LAWSON INDUSTRIES
7030 N.W. 37 TH. COURT
MIAMI, FL. 33147
TEL. (305) 696-8660 FAX (305) 696-6006

revisions:

no	date	by	description
A	5.03.96		REVISED
B	05.01.02		GENERAL REVISION
C	02.14.03		ANCHOR DETAILS ADDED

date: 09-28-95
scale: 1/2" = 1"
dr. by: HAMID
chk. by:

drawing no.
M95-04B

DESIGN LOAD CAPACITY - PSF					
WINDOW DIMS.		TUBE MULLIONS WITH STEEL			
WIDTH (W)	MULL SPAN	1 X 3	1 X 4	2 X 4	2 X 6
19-1/8"	38-3/8"	130.0	130.0	130.0	130.0
26-1/2"		130.0	130.0	130.0	130.0
30"		130.0	130.0	130.0	130.0
37"		130.0	130.0	130.0	130.0
42"		130.0	130.0	130.0	130.0
48"		130.0	130.0	130.0	130.0
54"		130.0	130.0	130.0	130.0
60"		130.0	130.0	130.0	130.0
66"		130.0	130.0	130.0	130.0
72"		130.0	130.0	130.0	130.0
75"		130.0	130.0	130.0	130.0
19-1/8"	50-5/8"	130.0	130.0	130.0	130.0
26-1/2"		130.0	130.0	130.0	130.0
30"		130.0	130.0	130.0	130.0
37"		130.0	130.0	130.0	130.0
42"		130.0	130.0	130.0	130.0
48"		130.0	130.0	130.0	130.0
54"		130.0	130.0	130.0	130.0
60"		122.3	130.0	130.0	130.0
66"		111.2	130.0	130.0	130.0
72"		101.9	130.0	130.0	130.0
75"		97.8	130.0	130.0	130.0
19-1/8"	57"	130.0	130.0	130.0	130.0
26-1/2"		130.0	130.0	130.0	130.0
30"		130.0	130.0	130.0	130.0
37"		130.0	130.0	130.0	130.0
42"		130.0	130.0	130.0	130.0
48"		120.6	130.0	130.0	130.0
54"		107.2	130.0	130.0	130.0
60"		96.5	130.0	130.0	130.0
66"		87.7	130.0	130.0	130.0
72"		80.4	127.6	130.0	130.0
75"		77.2	122.5	130.0	130.0
19-1/8"	63"	130.0	130.0	130.0	130.0
26-1/2"		130.0	130.0	130.0	130.0
30"		130.0	130.0	130.0	130.0
37"		128.1	130.0	130.0	130.0
42"		112.8	130.0	130.0	130.0
48"		98.7	130.0	130.0	130.0
54"		87.7	130.0	130.0	130.0
60"		79.0	125.4	130.0	130.0
66"		71.8	114.0	130.0	130.0
72"		65.8	104.5	130.0	130.0
75"		63.2	100.3	130.0	130.0

DESIGN LOAD CAPACITY - PSF					
WINDOW DIMS.		TUBE MULLIONS WITH STEEL			
WIDTH (W)	MULL SPAN	1 X 3	1 X 4	2 X 4	2 X 6
19-1/8"	74-1/4"	130.0	130.0	130.0	130.0
26-1/2"		125.1	130.0	130.0	130.0
30"		110.5	130.0	130.0	130.0
37"		89.6	130.0	130.0	130.0
42"		78.9	129.0	130.0	130.0
48"		69.1	112.8	130.0	130.0
54"		61.4	100.3	130.0	130.0
60"		55.2	90.3	130.0	130.0
66"		50.2	82.1	130.0	130.0
72"		46.0	75.2	123.2	130.0
75"		44.2	72.2	118.3	130.0
19-1/8"	84"	119.7	130.0	130.0	130.0
26-1/2"		86.4	130.0	130.0	130.0
30"		76.3	130.0	130.0	130.0
37"		61.9	114.4	130.0	130.0
42"		54.5	100.8	130.0	130.0
48"		47.7	88.2	130.0	130.0
54"		42.4	78.4	128.4	130.0
60"		38.2	70.5	115.5	130.0
66"		34.7	64.1	105.0	130.0
72"		31.8	58.8	96.3	130.0
75"		30.5	56.4	92.4	130.0
19-1/8"	96"	80.2	130.0	130.0	130.0
26-1/2"		57.9	122.3	130.0	130.0
30"		51.1	108.0	130.0	130.0
37"		41.5	87.6	130.0	130.0
42"		36.5	77.1	126.4	130.0
48"		32.0	67.5	110.6	130.0
54"		28.4	60.0	98.3	130.0
60"		25.6	54.0	88.5	130.0
66"		23.2	49.1	80.4	130.0
72"		21.3	45.0	73.7	130.0
75"		20.5	43.2	70.8	128.6
19-1/8"	108"	56.3	120.5	130.0	130.0
26-1/2"		40.6	87.0	130.0	130.0
30"		35.9	76.8	125.9	130.0
37"		29.1	62.3	102.1	130.0
42"		25.6	54.9	90.0	130.0
48"		22.4	48.0	78.7	130.0
54"		19.9	42.7	70.0	130.0
60"		X	38.4	63.0	127.0
66"		X	34.9	57.2	115.5
72"		X	32.0	52.5	105.9
75"		X	30.7	50.4	101.6

DESIGN LOAD CAPACITY - PSF					
WINDOW DIMS.		TUBE MULLIONS WITH STEEL			
WIDTH (W)	MULL SPAN	1 X 3	1 X 4	2 X 4	2 X 6
19-1/8"	120"	41.1	87.8	130.0	130.0
26-1/2"		29.6	63.4	103.9	130.0
30"		26.2	56.0	91.8	130.0
37"		21.2	45.4	74.4	130.0
42"		X	40.0	65.6	130.0
48"		X	35.0	57.4	128.6
54"		X	31.1	51.0	114.3
60"		X	28.0	45.9	102.9
66"		X	25.5	41.7	93.5
72"		X	23.3	38.3	85.7
75"		X	22.4	36.7	82.3
19-1/8"	132"	30.8	66.0	108.2	130.0
26-1/2"		22.3	47.6	78.1	130.0
30"		X	42.1	69.0	130.0
37"		X	34.1	55.9	130.0
42"		X	30.1	49.3	121.5
48"		X	26.3	43.1	106.3
54"		X	23.4	38.3	94.5
60"		X	21.0	34.5	85.0
66"		X	X	31.4	77.3
72"		X	X	28.7	70.9
75"		X	X	27.6	68.0
19-1/8"	144"	23.8	50.8	83.3	130.0
26-1/2"		X	36.7	60.1	130.0
30"		X	32.4	53.1	130.0
37"		X	26.3	43.1	107.3
42"		X	23.1	38.0	94.5
48"		X	20.3	33.2	82.7
54"		X	X	29.5	73.5
60"		X	X	26.6	66.2
66"		X	X	24.2	60.2
72"		X	X	22.1	55.1
75"		X	X	21.3	52.9
19-1/8"	150"	21.0	45.0	73.7	130.0
26-1/2"		X	32.5	53.2	130.0
30"		X	28.7	47.0	117.1
37"		X	23.2	38.1	94.9
42"		X	20.5	33.6	83.6
48"		X	X	29.4	73.2
54"		X	X	26.1	65.1
60"		X	X	23.5	58.5
66"		X	X	21.4	53.2
72"		X	X	X	48.8
75"		X	X	X	46.8

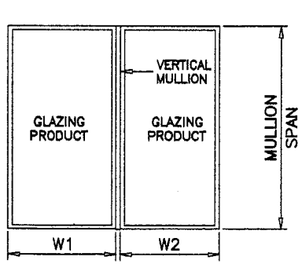

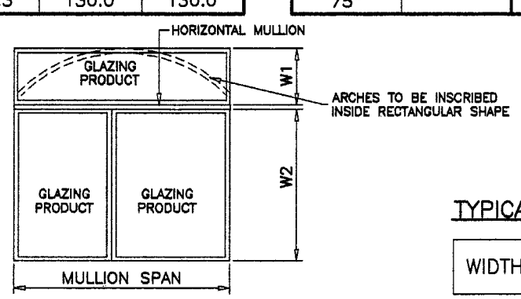

NOTE:
MULLIONS RATED IN THESE CHARTS MAY BE ORIENTED VERTICALLY OR HORIZONTALLY.
(INTERPOLATION BETWEEN WIDTHS ALLOWED)

TYPICAL MULLION ARRANGEMENTS

$$\text{WIDTH (W)} = \frac{W1 + W2}{2}$$

Engr: DR. HUMAYOUN FAROOQ
STRUCTURES
FLA. PE # 16557

FEB 14 2003

PRODUCT REVISED
as complying with the Florida Building Code
Acceptance No 03-0225.07
Expiration Date 05/30/07
By [signature]
Miami-Dade Product Control Division

AL-FAROOQ CORPORATION
ENGINEERS, PLANNERS & PRODUCT DESIGN
1235 SW 87 AVE
MIAMI, FLORIDA 33174
TEL. (305) 264-8100 FAX. (305) 262-6978
MULLION\M95-04B-N

ALUMINUM TUBE MULLIONS WITH STEEL INSERTS

LAWSON INDUSTRIES
7030 N.W. 37 TH. COURT
MIAMI, FL. 33147
TEL. (305) 696-8660 FAX (305) 696-6006

revisions:

no	date	by	description

date: 09-28-95
scale:
dr. by: HAMID
chk. by:

drawing no.
M95-04B

DESIGN LOAD CAPACITY - PSF						
WINDOW DIMS.		ANCHORS TYPE				
WIDTH (W)	MULL SPAN	A	B	C	D	E
19-1/8"	38-3/8"	130.0	130.0	130.0	130.0	130.0
26-1/2"		110.4	130.0	130.0	130.0	130.0
30"		97.6	130.0	130.0	130.0	130.0
37"		79.1	109.5	130.0	130.0	130.0
42"		69.7	96.5	130.0	130.0	130.0
48"		61.0	84.4	122.0	130.0	130.0
54"		54.2	75.0	108.4	130.0	130.0
60"		48.8	67.5	97.6	130.0	130.0
66"		44.3	61.4	88.7	130.0	130.0
72"		40.7	56.3	81.3	128.4	130.0
75"		39.0	54.0	78.1	123.3	130.0
19-1/8"	50-5/8"	116.0	130.0	130.0	130.0	130.0
26-1/2"		83.7	115.9	130.0	130.0	130.0
30"		74.0	102.4	130.0	130.0	130.0
37"		60.0	83.0	119.9	130.0	130.0
42"		52.8	73.1	105.7	130.0	130.0
48"		46.2	64.0	92.4	130.0	130.0
54"		41.1	56.9	82.2	129.8	130.0
60"		37.0	51.2	74.0	116.8	130.0
66"		33.6	46.5	67.2	106.2	130.0
72"		30.8	42.7	61.6	97.3	130.0
75"		29.6	41.0	59.2	93.4	130.0
19-1/8"	57"	103.0	130.0	130.0	130.0	130.0
26-1/2"		74.4	103.0	130.0	130.0	130.0
30"		65.7	90.9	130.0	130.0	130.0
37"		53.3	73.7	106.5	130.0	130.0
42"		46.9	65.0	93.8	130.0	130.0
48"		41.1	56.8	82.1	129.7	130.0
54"		36.5	50.5	73.0	115.3	130.0
60"		32.8	45.5	65.7	103.7	130.0
66"		29.9	41.3	59.7	94.3	130.0
72"		27.4	37.9	54.7	86.5	130.0
75"		26.3	36.4	52.5	83.0	130.0
19-1/8"	63"	93.2	129.1	130.0	130.0	130.0
26-1/2"		67.3	93.2	130.0	130.0	130.0
30"		59.4	82.3	118.9	130.0	130.0
37"		48.2	66.7	96.4	130.0	130.0
42"		42.4	58.8	84.9	130.0	130.0
48"		37.1	51.4	74.3	117.3	130.0
54"		33.0	45.7	66.0	104.3	130.0
60"		29.7	41.1	59.4	93.9	130.0
66"		27.0	37.4	54.0	85.3	130.0
72"		24.8	34.3	49.5	78.2	130.0
75"		23.8	32.9	47.5	75.1	130.0

DESIGN LOAD CAPACITY - PSF						
WINDOW DIMS.		ANCHORS TYPE				
WIDTH (W)	MULL SPAN	A	B	C	D	E
19-1/8"	74-1/4"	79.1	109.5	130.0	130.0	130.0
26-1/2"		57.1	79.0	114.2	130.0	130.0
30"		50.4	69.8	100.8	130.0	130.0
37"		40.9	56.6	81.8	129.2	130.0
42"		36.0	49.9	72.0	113.8	130.0
48"		31.5	43.6	63.0	99.6	130.0
54"		28.0	38.8	56.0	88.5	130.0
60"		25.2	34.9	50.4	79.6	130.0
66"		22.9	31.7	45.8	72.4	130.0
72"		21.0	29.1	42.0	66.4	130.0
75"		20.2	27.9	40.3	63.7	127.4
19-1/8"	84"	69.9	96.8	130.0	130.0	130.0
26-1/2"		50.5	69.9	100.9	130.0	130.0
30"		44.6	61.7	89.1	130.0	130.0
37"		36.1	50.0	72.3	114.2	130.0
42"		31.8	44.1	63.7	100.6	130.0
48"		27.9	38.6	55.7	88.0	130.0
54"		24.8	34.3	49.5	78.2	130.0
60"		22.3	30.9	44.6	70.4	130.0
66"		20.3	28.1	40.5	64.0	128.0
72"		X	25.7	37.1	58.7	117.3
75"		X	24.7	35.7	56.3	112.6
19-1/8"	96"	61.2	84.7	122.4	130.0	130.0
26-1/2"		44.2	61.1	88.3	130.0	130.0
30"		39.0	54.0	78.0	123.2	130.0
37"		31.6	43.8	63.2	99.9	130.0
42"		27.9	38.6	55.7	88.0	130.0
48"		24.4	33.8	48.8	77.0	130.0
54"		21.7	30.0	43.3	68.4	130.0
60"		X	27.0	39.0	61.6	123.2
66"		X	24.5	35.5	56.0	112.0
72"		X	22.5	32.5	51.3	102.7
75"		X	21.6	31.2	49.3	98.6
19-1/8"	108"	54.4	75.3	108.8	130.0	130.0
26-1/2"		39.2	54.3	78.5	124.0	130.0
30"		34.7	48.0	69.3	109.5	130.0
37"		28.1	38.9	56.2	88.8	130.0
42"		24.8	34.3	49.5	78.2	130.0
48"		21.7	30.0	43.3	68.4	130.0
54"		X	26.7	38.5	60.8	121.7
60"		X	24.0	34.7	54.8	109.5
66"		X	21.8	31.5	49.8	99.6
72"		X	20.0	28.9	45.6	91.3
75"		X	X	27.7	43.8	87.6

DESIGN LOAD CAPACITY - PSF						
WINDOW DIMS.		ANCHORS TYPE				
WIDTH (W)	MULL SPAN	A	B	C	D	E
19-1/8"	120"	48.9	67.8	97.9	130.0	130.0
26-1/2"		35.3	48.9	70.6	111.6	130.0
30"		31.2	43.2	62.4	98.6	130.0
37"		25.3	35.0	50.6	79.9	130.0
42"		22.3	30.9	44.6	70.4	130.0
48"		X	27.0	39.0	61.6	123.2
54"		X	24.0	34.7	54.8	109.5
60"		X	21.6	31.2	49.3	98.6
66"		X	X	28.4	44.8	89.6
72"		X	X	26.0	41.1	82.1
75"		X	X	25.0	39.4	78.8
19-1/8"	132"	44.5	61.6	89.0	130.0	130.0
26-1/2"		32.1	44.5	64.2	101.4	130.0
30"		28.4	39.3	56.7	89.6	130.0
37"		23.0	31.8	46.0	72.6	130.0
42"		20.3	28.1	40.5	64.0	128.0
48"		X	24.5	35.5	56.0	112.0
54"		X	21.8	31.5	49.8	99.6
60"		X	X	28.4	44.8	89.6
66"		X	X	25.8	40.7	81.5
72"		X	X	23.6	37.3	74.7
75"		X	X	22.7	35.8	71.7
19-1/8"	144"	40.8	56.5	81.6	128.8	130.0
26-1/2"		29.4	40.8	58.9	93.0	130.0
30"		26.0	36.0	52.0	82.1	130.0
37"		21.1	29.2	42.2	66.6	130.0
42"		X	25.7	37.1	58.7	117.3
48"		X	22.5	32.5	51.3	102.7
54"		X	20.0	28.9	45.6	91.3
60"		X	X	26.0	41.1	82.1
66"		X	X	23.6	37.3	74.7
72"		X	X	21.7	34.2	68.4
75"		X	X	20.8	32.9	65.7
19-1/8"	150"	39.2	54.2	78.3	123.7	130.0
26-1/2"		28.3	39.1	56.5	89.3	130.0
30"		25.0	34.6	49.9	78.8	130.0
37"		20.2	28.0	40.5	63.9	127.9
42"		X	24.7	35.7	56.3	112.6
48"		X	21.6	31.2	49.3	98.6
54"		X	X	27.7	43.8	87.6
60"		X	X	25.0	39.4	78.8
66"		X	X	22.7	35.8	71.7
72"		X	X	20.8	32.9	65.7
75"		X	X	20.0	31.5	63.1

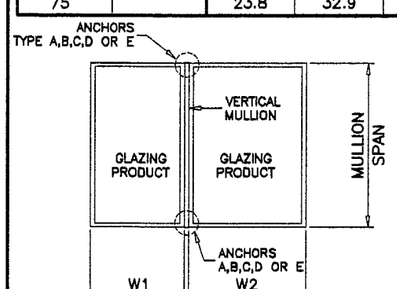

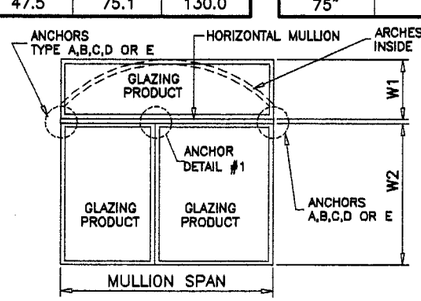

NOTE:

ANY ANCHOR CONDITION SHOWN HEREIN MAY COVER LOCATIONS AT HEAD, SILL OR JAMB ENDS.

FOR ANCHORS DESCRIPTION SEE SHEETS 4 THRU 6.
(INTERPOLATION BETWEEN WIDTHS OR SPANS ALLOWED)

TYPICAL MULLION ARRANGEMENTS

$$\text{WIDTH (W)} = \frac{W1 + W2}{2}$$

Engr: DR. HUMAYOUN FAROOQ
STRUCTURES
FLA. PE # 16557
FEB 14 2008

PRODUCT REVISED
as complying with the Florida
Building Code
Acceptance No. 03-0225.07
Expiration Date 05/30/07
By
Miami Dade Product Control
Division

AL-FAROOQ CORPORATION
ENGINEERS, PLANNERS & PRODUCT DESIGN
1235 SW 87 AVE
MIAMI, FLORIDA 33174
TEL. (305) 264-8100 FAX. (305) 262-6978

MULLION\M95-04B-N

ALUMINUM TUBE MULLIONS WITH STEEL INSERTS

LAWSON INDUSTRIES
7030 N.W. 37 TH. COURT
MIAMI, FL. 33147
TEL. (305) 696-8660 FAX (305) 696-6006

revisions:

no	date	by	description

date: 09-28-95
scale:
dr. by: HAMID
chk. by:

drawing no.
M95-04B

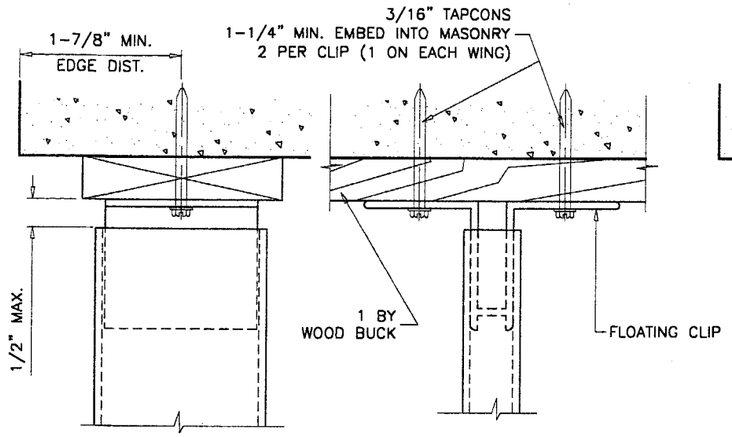

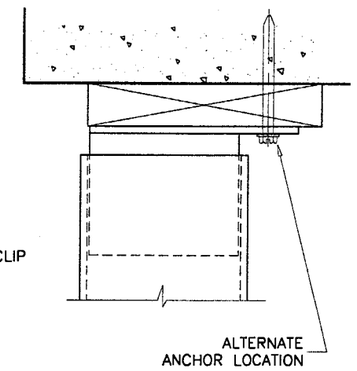

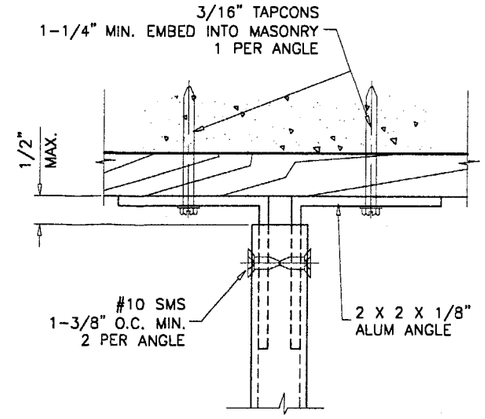

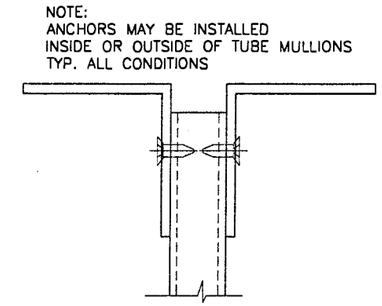

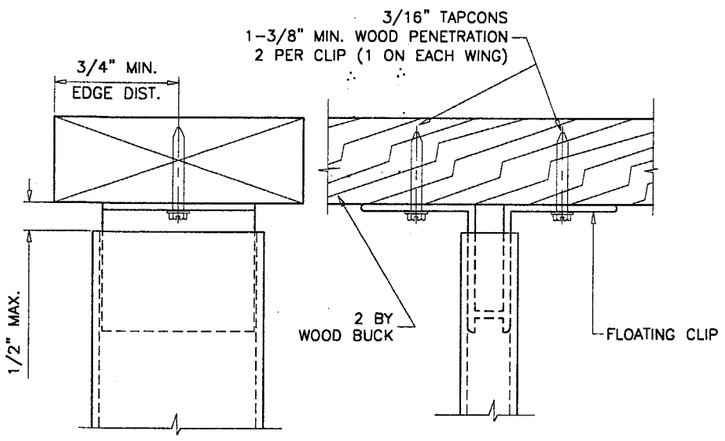

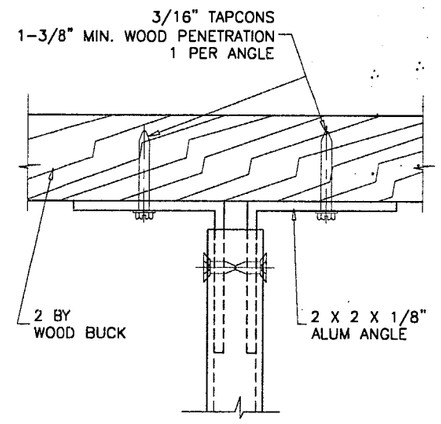

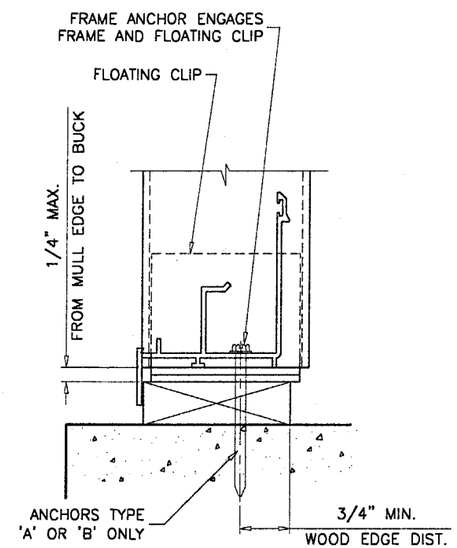

ALL CLIPS AND ANGLES TO FIT SNUG
INTO TUBE MULLIONS.
TAPCONS MAY BE HEX OR FLAT HEAD.

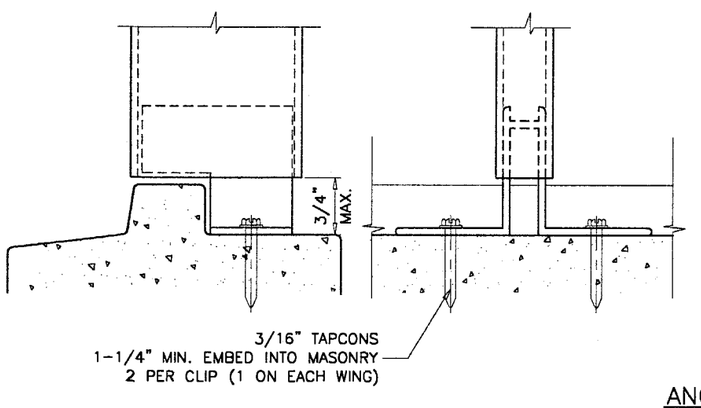

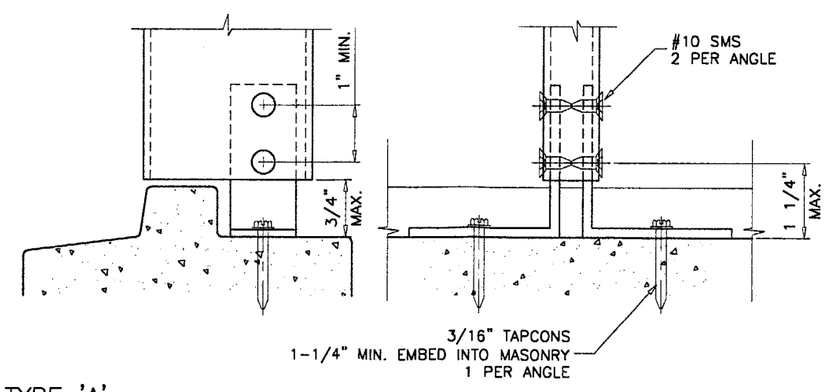

ANCHORS TYPE 'A'

Engr: DR. HUMAYOUN FAROOQ
STRUCTURES
FLA. PE # 16557
FEB 14 2003

PRODUCT REVISED
as complying with the Florida Building Code
Acceptance No. 03-0225.07
Expiration Date 05/30/07
By [illegible]
Miami Dade Product Control Division

AL-FAROOQ CORPORATION
ENGINEERS, PLANNERS & PRODUCT DESIGN
1235 SW 87 AVE
MIAMI, FLORIDA 33174
TEL. (305) 264-8100 FAX. (305) 262-6978

MULLION\M95-04B-N

ALUMINUM TUBE MULLIONS WITH STEEL INSERTS

LAWSON INDUSTRIES
7030 N.W. 37 TH. COURT
MIAMI, FL. 33147
TEL. (305) 696-8660 FAX (305) 696-6006

revisions:

no	date	by	description

date: 09-28-95
scale: 3/8" = 1"
dr. by: HAMID
chk. by:

drawing no.
M95-04B

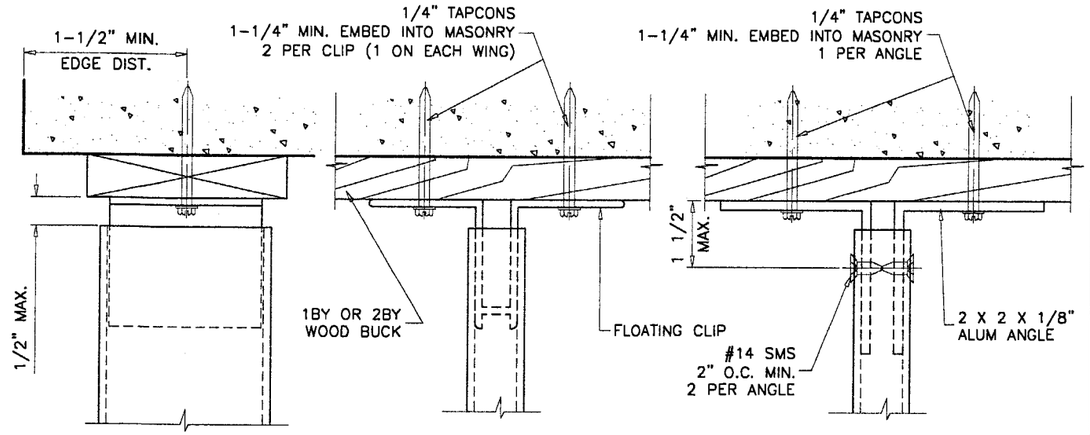

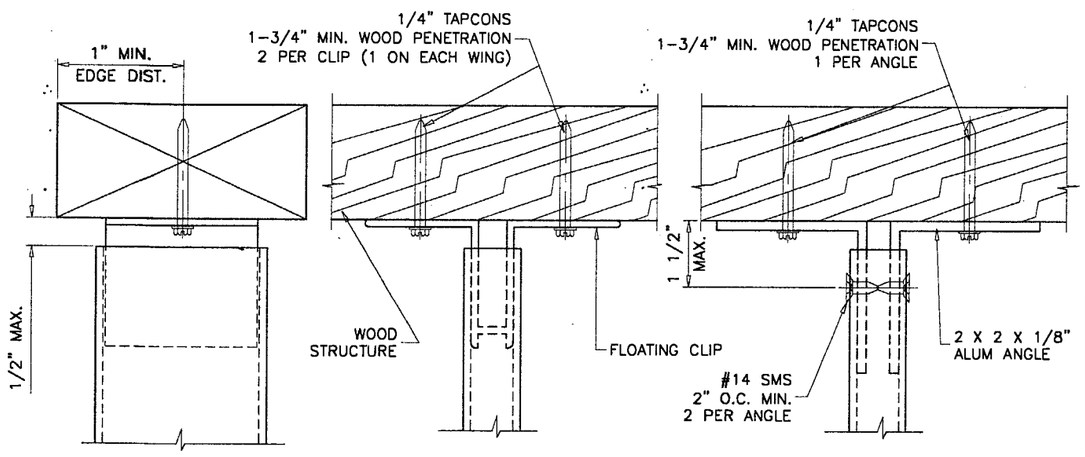

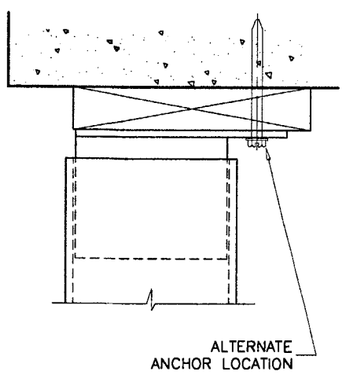

ANCHORS TYPE 'B'

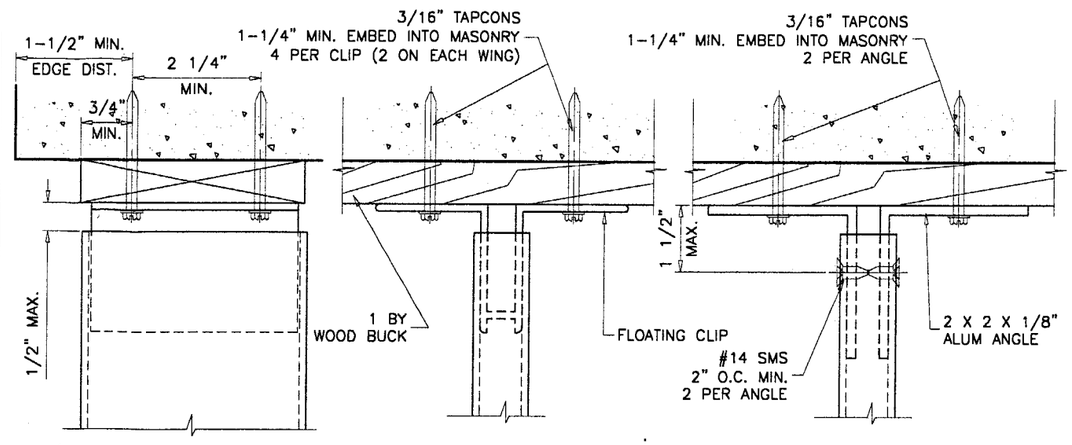

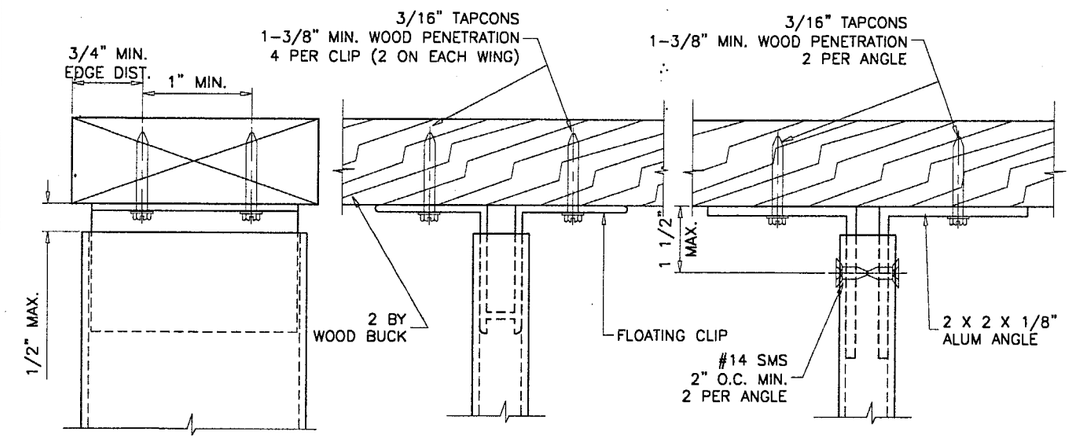

ANCHORS TYPE 'C'

ALL CLIPS AND ANGLES TO FIT SNUG INTO TUBE MULLIONS.
TAPCONS MAY BE HEX OR FLAT HEAD.

Engr: DR. HUMAYOUN FAROOQ
STRUCTURES
FLA. PE # 16557

FEB 14 2003

PRODUCT REVISED
as complying with the Florida Buiding Code
Acceptance No 03-0225.07
Expiration Date 05/30/07
By
Miami Dade Product Control Division

AL-FAROOQ CORPORATION
ENGINEERS, PLANNERS & PRODUCT DESIGN
1235 SW 87 AVE
MIAMI, FLORIDA 33174
TEL. (305) 264-8100 FAX. (305) 262-6978

MULLION\M95-04B-N

ALUMINUM TUBE MULLIONS WITH STEEL INSERTS

LAWSON INDUSTRIES
7030 N.W. 37 TH. COURT
MIAMI, FL. 33147
TEL. (305) 696-8660 FAX (305) 696-6006

revisions:

no	date	by	description

date: 09-28-95
scale: 3/8" = 1"
dr. by: HAMID
chk. by:

drawing no.
M95-04B

sheet 5 of 7

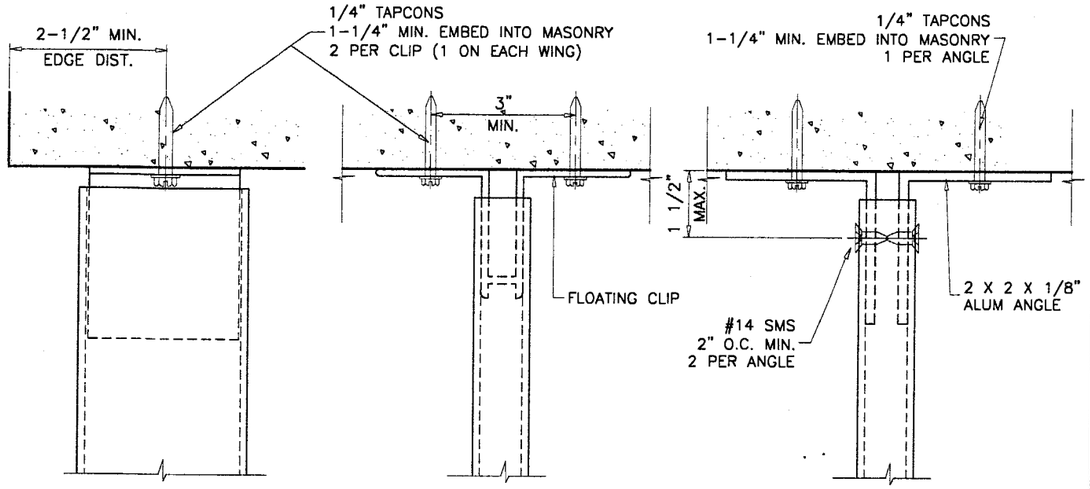

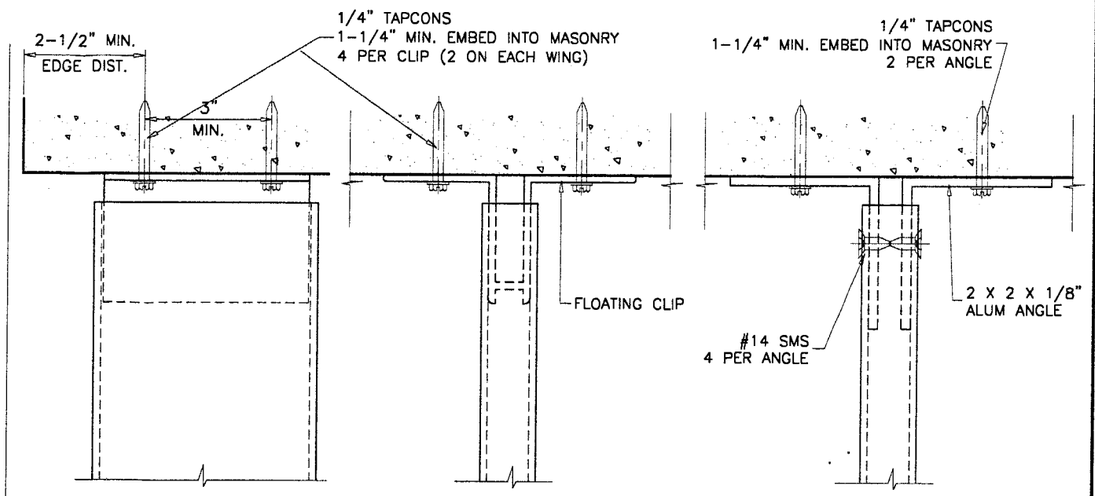

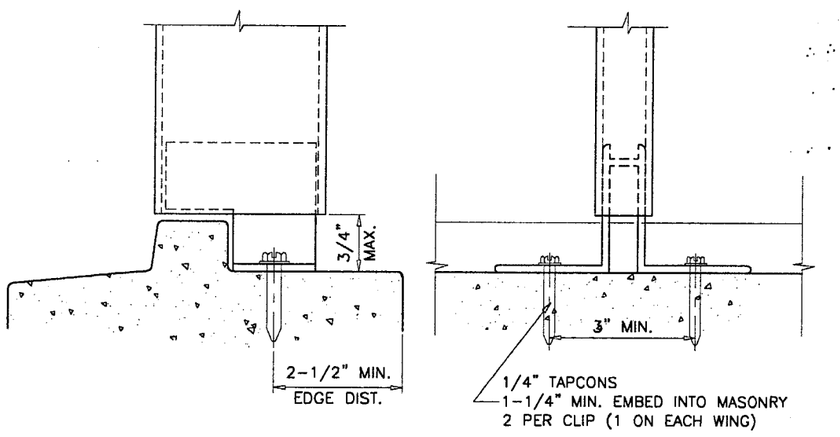

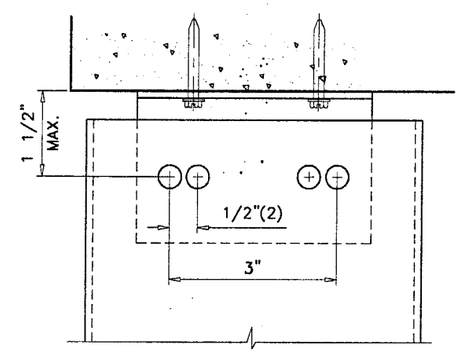

LOCATION OF SCREWS CONNECTING ANGLES TO TUBES

ANCHORS TYPE 'E'

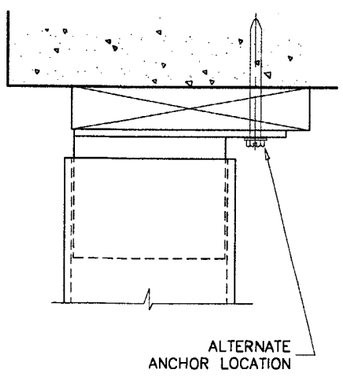

ANCHORS TYPE 'D'

ALL CLIPS AND ANGLES TO FIT SNUG INTO TUBE MULLIONS.
TAPCONS MAY BE HEX OR FLAT HEAD.

CLIPS OR ANGLES CONNECTED DIRECTLY TO MASONRY TO BE PROTECTED WITH ALKALI-RESISTANT COATINGS, SUCH AS BITUMINOUS PAINT OR WATER-WHITE METHACRYLATE LACQUER.

Engr: DR. HUMAYOUN FAROOQ
STRUCTURES
FLA. PE # 16557

FEB 14 2003

PRODUCT REVISED
as complying with the Florida Buiding Code
Acceptance No 03-0225.07
Expiration Date 05/30/07

By
Miami Dade Product Control Division

AL-FAROOQ CORPORATION
ENGINEERS, PLANNERS & PRODUCT DESIGN
1235 SW 87 AVE
MIAMI, FLORIDA 33174
TEL. (305) 264-8100 FAX. (305) 262-6978

MULLION\M95-04B-N

ALUMINUM TUBE MULLIONS WITH STEEL INSERTS

LAWSON INDUSTRIES
7030 N.W. 37 TH. COURT
MIAMI, FL. 33147
TEL. (305) 696-8660 FAX (305) 696-6006

revisions:			
no	date	by	description

date: 09-28-95
scale: 3/8" = 1"
dr. by: HAMID
chk. by:

drawing no.
M95-04B

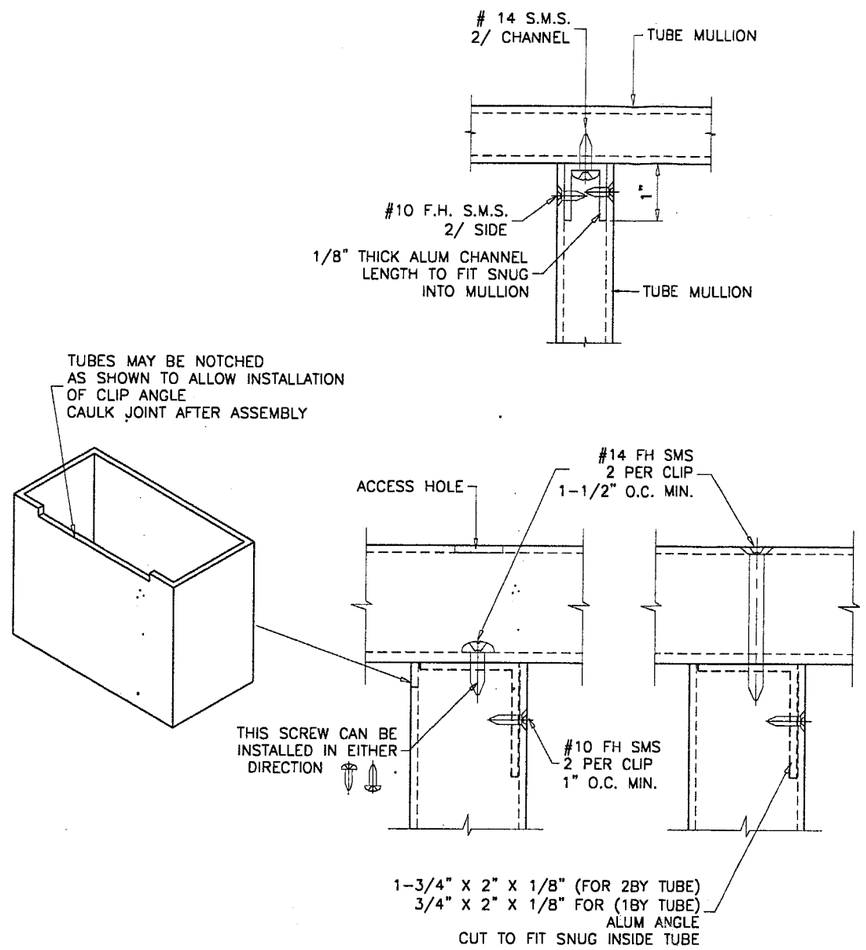

ANCHORS DETAIL #1

METAL TO METAL CONNECTION

USE CHARTS FOR ANCHOR TYPE 'D' TO VERIFY CAPACITY OF CONNECTION

Engr: DR. HUMAYOUN FAROOQ
STRUCTURES
FLA. PE # 16557

FEB 1 4 2003

PRODUCT REVISED
as complying with the Florida Building Code
Acceptance No 03-0225.07
Expiration Date 05/30/07
By
Miami Dade Product Control Division

AL-FAROOQ CORPORATION
ENGINEERS, PLANNERS & PRODUCT DESIGN
1235 SW 87 AVE
MIAMI, FLORIDA 33174
TEL. (305) 264-8100 FAX. (305) 262-6978

MULLION\M95-04B-N

ALUMINUM TUBE MULLIONS WITH STEEL INSERTS

LAWSON INDUSTRIES
7030 N.W. 37 TH. COURT
MIAMI, FL. 33147
TEL. (305) 696-8660 FAX (305) 696-6006

revisions:			
no	date	by	description

date: 09-28-95
scale: 3/8" = 1"
dr. by: HAMID
chk. by:

drawing no.
M95-04B