MIAMI-DADE

BUILDING CODE COMPLIANCE OFFICE (BCCO)
PRODUCT CONTROL DIVISION

MIAMI-DADE COUNTY, FLORIDA
METRO-DADE FLAGLER BUILDING
140 WEST FLAGLER STREET, SUITE 1603
MIAMI, FLORIDA 33130-1563
(305) 375-2901 FAX (305) 375-2908

NOTICE OF ACCEPTANCE (NOA)

D & D Aluminum Distributors, Inc.
5980 Funston Street
Hollywood, Florida 33023

SCOPE:
This NOA is being issued under the applicable rules and regulations governing the use of construction materials. The documentation submitted has been reviewed by Miami-Dade County Product Control Division and accepted by the Board of Rules and Appeals (BORA) to be used in Miami Dade County and other areas where allowed by the Authority Having Jurisdiction (AHJ).

This NOA shall not be valid after the expiration date stated below. The Miami-Dade County Product Control Division (In Miami Dade County) and/or the AHJ (in areas other than Miami Dade County) reserve the right to have this product or material tested for quality assurance purposes. If this product or material fails to perform in the accepted manner, the manufacturer will incur the expense of such testing and the AHJ may immediately revoke, modify, or suspend the use of such product or material within their jurisdiction. BORA reserves the right to revoke this acceptance, if it is determined by Miami-Dade County Product Control Division that this product or material fails to meet the requirements of the applicable building code.

This product is approved as described herein, and has been designed to comply with the High Velocity Hurricane Zone of the Florida Building Code.

DESCRIPTION: 0.060" Aluminum Storm Panels Shutter

APPROVAL DOCUMENT: Drawing No. 03-044, titled " 0.060" Aluminum Storm Panel ", sheets 1 through 6 of 6, prepared by Tilteco, Inc., dated February 26, 2003, last revision #1 dated February 26, 2003 bearing the Miami-Dade County Product Control Revision stamp with the Notice of Acceptance number and expiration date by the Miami-Dade County Product Control Division.

MISSILE IMPACT RATING: Large and Small Missile Impact

LABELING: Each panel shall bear a permanent label with the manufacturer's name or logo, city, state and the following statement: "Miami-Dade County Product Control Approved", unless otherwise noted herein.

RENEWAL of this NOA shall be considered after a renewal application has been filed and there has been no change in the applicable building code negatively affecting the performance of this product.

TERMINATION of this NOA will occur after the expiration date or if there has been a revision or change in the materials, use, and/or manufacture of the product or process. Misuse of this NOA as an endorsement of any product, for sales, advertising or any other purposes shall automatically terminate this NOA. Failure to comply with any section of this NOA shall be cause for termination and removal of NOA.

ADVERTISEMENT: The NOA number preceded by the words Miami-Dade County, Florida, and followed by the expiration date may be displayed in advertising literature. If any portion of the NOA is displayed, then it shall be done in its entirety.

INSPECTION: A copy of this entire NOA shall be provided to the user by the manufacturer or its distributors and shall be available for inspection at the job site at the request of the Building Official.

This NOA **revises & renews NOA # 99-0430.04** & consists of this page 1 & approval document mentioned above
The submitted documentation was reviewed by **Helmy A. Makar, P.E.**

H.M.
05/08/03

PRODUCT CONTROL ACCEPTED

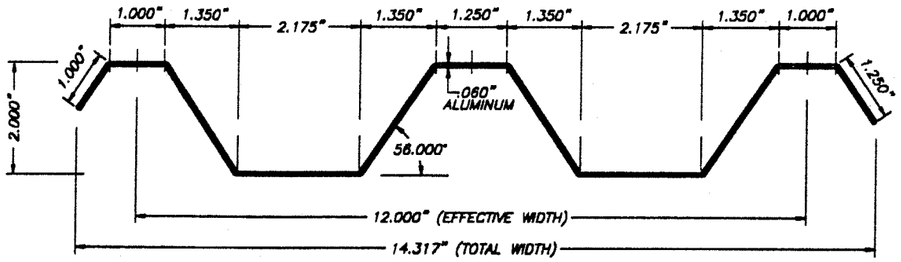

① PANEL

SCALE: 3/8" = 1"

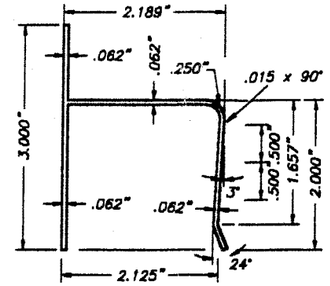

② HEADER

SCALE: 1/2" = 1"

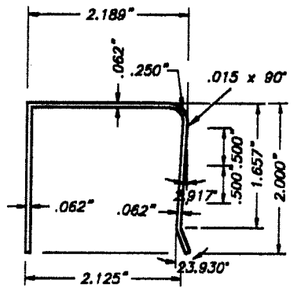

③ HEADER

SCALE: 1/2" = 1"

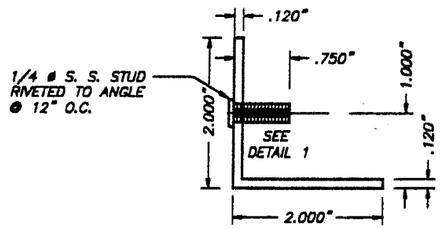

④ ANGLE WITH STUD

SCALE: 1/2" = 1"

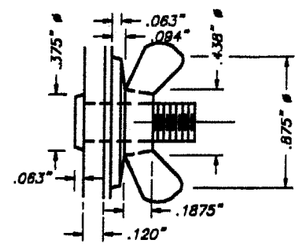

DETAIL 1

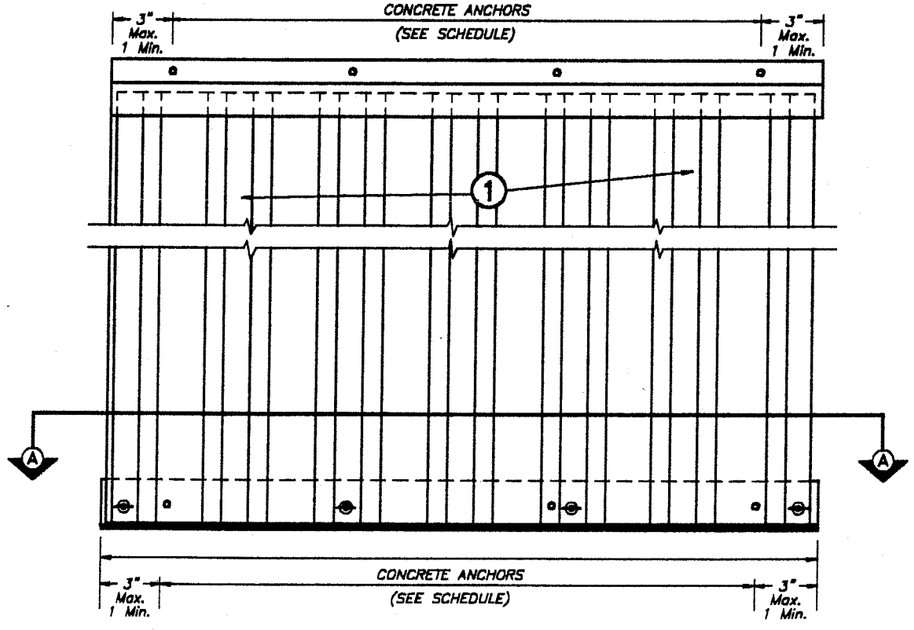

STORM PANEL ELEVATION SCALE 1 1/2" = 1'-0"

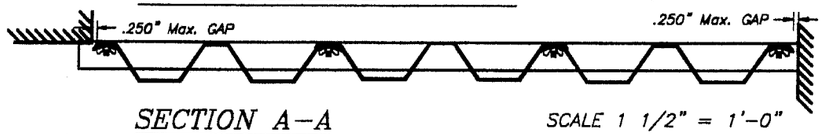

SECTION A-A SCALE 1 1/2" = 1'-0"

COMPONENTS

GENERAL NOTES:

1. STORM PANEL SHOWN ON THIS PRODUCT APPROVAL DOCUMENT HAS BEEN DESIGNED IN ACCORDANCE WITH THE 2001 EDITION OF THE FLORIDA BUILDING CODE.
DESIGN WIND LOADS SHALL BE DETERMINED AS PER SECTION 1619 OF THE ABOVE MENTIONED CODE, FOR A BASIC WIND SPEED OF 146 m.p.h., AND IN ACCORDANCE WITH ASCE 7-98 STANDARD.
STORM PANEL'S ADEQUACY FOR IMPACT AND FATIGUE RESISTANCE HAS BEEN VERIFIED IN ACCORDANCE WITH SECTIONS 1606.1.4 OF THE ABOVE MENTIONED CODE AS PER PA-201, PA-202 AND PA-203 AS PER AMERICAN TEST LAB REPORT # 0812.01-98.

2. ALL ALUMINUM EXTRUSIONS SHALL BE 6063-T6 ALLOY (UNLESS OTHERWISE NOTED).

3. ALL ALUMINUM SHEET METAL PANEL SHALL HAVE 5052-H34 ALLOY.

4. ALL SCREWS TO BE STAINLESS STEEL 304 OR 316 SERIES W/ 50 ksi YIELD POINT AND 90 ksi TENSILE STRENGTH OR CORROSION RESISTANT COATED CARBON STEEL AS PER DIN 50018.

5. BOLTS TO BE 2024-T4 ALUMINUM ALLOY, GALVANIZED OR STAINLESS STEEL, WITH 36 ksi MINIMUM YIELD POINT.

6. ANCHORS TO WALL SHALL BE AS FOLLOWS: (UNLESS OTHERWISE NOTED)

(A) TO EXISTING POURED CONCRETE:
- 1/4"ø TAPCON ANCHORS, AS MANUFACTURED BY I.T.W. BUILDEX OR ELCO TEXTRON.
- 1/4"ø ZAMAC NAILIN ANCHORS, AS MANUFACTURED BY POWERS FASTENING, INC.
- 1/4"øx7/8" CALK-IN ANCHORS, AS MANUFACTURED BY POWERS FASTENING, INC.

NOTES:
A.1) MINIMUM EMBEDMENT INTO POURED CONCRETE OF TAPCON ANCHORS IS 1 3/4"; FOR ZAMAC NAILIN IS 1 1/2".
A.2) 7/8" CALK-IN ANCHORS SHALL BE ENTIRELY EMBEDDED INTO THE POURED CONCRETE.
NO EMBEDMENT INTO STUCCO SHALL BE PERMITTED.
1/4"ø-20 SCREWS USED SHALL BE 1 1/2" LONG MINIMUM SHOULD STUCCO EXIST, AND 1" MINIMUM FOR WALLS WITH NO STUCCO.
A.3) IN CASE THAT PRECAST STONE, PRECAST CONCRETE PANELS, OR PAVERS BE FOUND ON THE EXISTING WALL OR FLOOR, ANCHORS SHALL BE LONG ENOUGH TO REACH THE MAIN STRUCTURE BEHIND SUCH PANELS, ANCHORAGE SHALL BE AS INDICATED ON NOTES A.1) & 7/8" FOR ANCHORS MENTIONED IN A.2) ABOVE.

(B) TO EXISTING CONCRETE BLOCK WALL:
- 1/4"ø TAPCON ANCHORS, AS MANUFACTURED BY I.T.W. BUILDEX OR ELCO TEXTRON.
- 1/4"ø ZAMAC NAILIN ANCHORS, AS MANUFACTURED BY POWERS FASTENING, INC.
- 1/4"øx7/8" CALK-IN ANCHORS, AS MANUFACTURED BY POWERS FASTENING, INC.

NOTES:
B.1) MINIMUM EMBEDMENT OF TAPCON ANCHORS OR ZAMAC NAILIN INTO THE CONCRETE BLOCK UNIT SHALL BE 1 1/4".
B.2) 7/8" CALK-IN ANCHORS SHALL BE ENTIRELY EMBEDDED INTO THE CONCRETE BLOCK UNIT.
NO EMBEDMENT INTO STUCCO SHALL BE PERMITTED.
1/4"ø-20 SCREWS USED SHALL BE 1 1/2" LONG MINIMUM SHOULD STUCCO EXIST, AND 1" MINIMUM FOR WALLS WITH NO STUCCO.
B.3) IN CASE THAT PRECAST STONE OR PRECAST CONCRETE PANELS BE FOUND ON THE EXISTING WALL, ANCHORS SHALL BE LONG ENOUGH TO REACH THE MAIN STRUCTURE BEHIND SUCH PANELS.
ANCHORAGE SHALL BE 1 1/4" MINIMUM FOR ANCHORS MENTIONED IN B.1) & 7/8" FOR ANCHORS MENTIONED IN B.2)

(C) ANCHORS SHALL BE INSTALLED FOLLOWING ALL OF THE RECOMMENDATIONS AND SPECIFICATIONS OF THE ANCHOR'S MANUFACTURER.

7. IT SHALL BE THE RESPONSIBILITY OF THE CONTRACTOR TO VERIFY THE SOUNDNESS OF THE STRUCTURE WHERE SHUTTER IS TO BE ATTACHED TO INSURE PROPER ANCHORAGE. THIS PANEL SHALL ONLY BE ATTACHED TO CONCRETE, BLOCK OR WOOD FRAME BUILDINGS.

8. PANELS MAY ALSO BE INSTALLED HORIZONTALLY FOLLOWING INSTALLATION DETAILS SHOWN ON SECTIONS 1A AND 4 ON SHEET 2 OF 6.

9. (a) THIS PRODUCT APPROVAL DOCUMENT (P.A.D.) PREPARED BY THIS ENGINEER IS GENERIC AND DOES NOT PROVIDE INFORMATION FOR A SITE SPECIFIC PROJECT; i.e. WHERE THE SITE CONDITIONS DEVIATE FROM THE P.A.D.

(b) CONTRACTOR TO BE RESPONSIBLE FOR THE SELECTION, PURCHASE AND INSTALLATION OF THIS PRODUCT BASED ON THIS PRODUCT APPROVAL PROVIDED HE/SHE DOES NOT DEVIATE FROM THE CONDITIONS DETAILED ON THIS DOCUMENT.

(c) THIS PRODUCT APPROVAL DOCUMENT WILL BE CONSIDERED INVALID IF MODIFIED.

(d) SITE SPECIFIC PROJECTS SHALL BE PREPARED BY A FLORIDA REGISTERED ENGINEER OR ARCHITECT WHICH WILL BECOME THE PROFESSIONAL OF RECORD (P.O.R.) FOR THE PROJECT AND WHO WILL BE RESPONSIBLE FOR THE PROPER USE OF THE P.A.D. PROFESSIONAL OF RECORD, ACTING AS A DELEGATED ENGINEER TO THE P.A.D. ENGINEER, SHALL SUBMIT TO THIS THE SITE SPECIFIC DRAWINGS FOR REVIEW.

(e) THIS P.A.D. SHALL BEAR THE DATE AND ORIGINAL SEAL AND SIGNATURE OF THE PROFESSIONAL ENGINEER THAT PREPARED IT.

10. SHUTTER MANUFACTURER'S LABEL SHALL BE PLACED AT BOTTOM OF EACH PANEL.
LABEL SHALL READ AS FOLLOWS:
D & D ALUMINUM DISTRIBUTORS, INC.
HOLLYWOOD, FLORIDA
MIAMI-DADE COUNTY PRODUCT CONTROL APPROVED

PRODUCT REVISED
as complying with the Florida Buiding Code
Acceptance No 03-0306.03
Expiration Date 05/22/2008
By Helmy A. Nakhla
Miami Dade Product Control Division

F.B.C. (H.V.H.Z.)/MIAMI-DADE COUNTY

FEB 27 2003

TILLECO INC.
TILLIT TESTING & ENGINEERING COMPANY
6595 N.W. 36th. St., Sta. 217, VIRGINIA GARDENS, FL 33166
Phone : (305)871-1530 Fax : (305)871-1531
EB-0006719
WALTER A. TILLIT Jr., P. E.
FLORIDA Lic. 44167

0.060" ALUMINUM STORM PANEL

D & D ALUMINUM DISTRIBUTORS, INC.
5970 FUNSTON ST.
HOLLYWOOD, FL. 33023

REV. NO	DESCRIPTION	DATE	REV. No	DESCRIPTION	DATE
1	OLD 98-262	2/26/03	3		
2	-	-	4		

AS SHOWN SCALE

2/26/03 DATE

03 - 044 DRAWING No

SHEET 1 OF 6

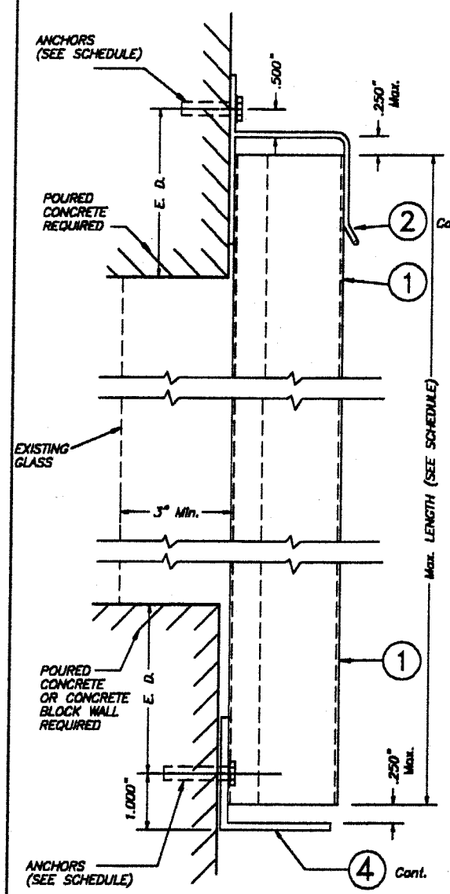

SECTION @ ANCHORS (BOTTOM)

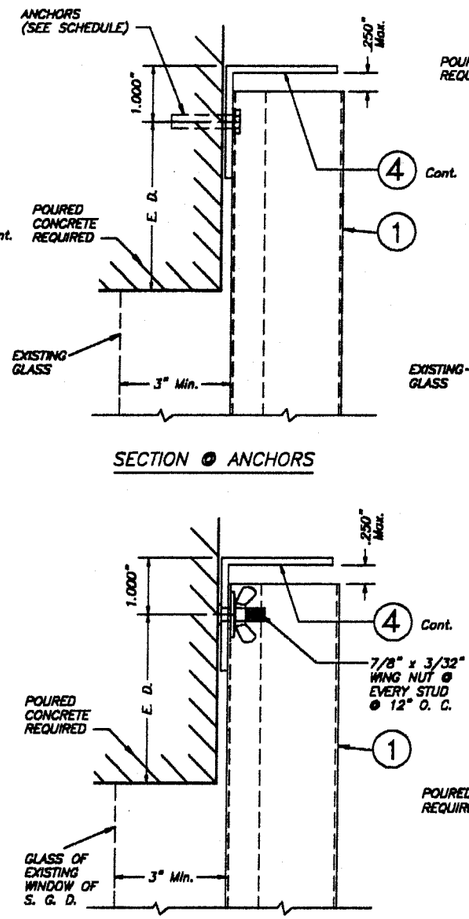

SECTION @ ANCHORS

SECTION @ STUDS

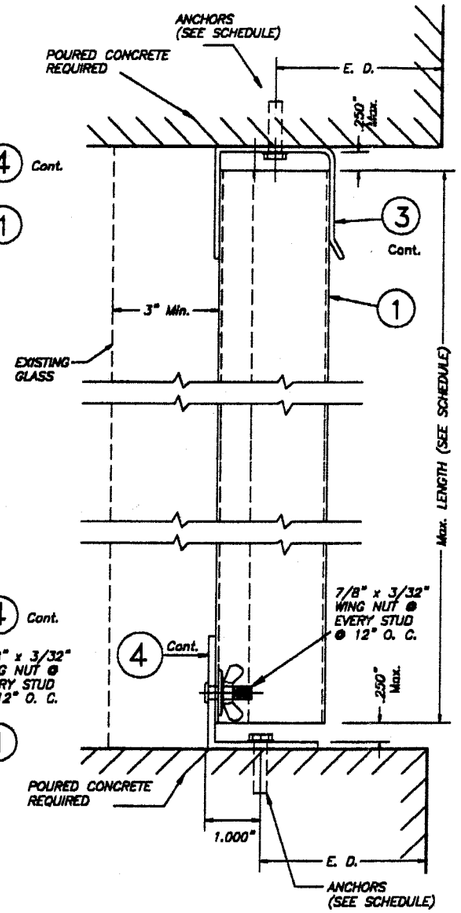

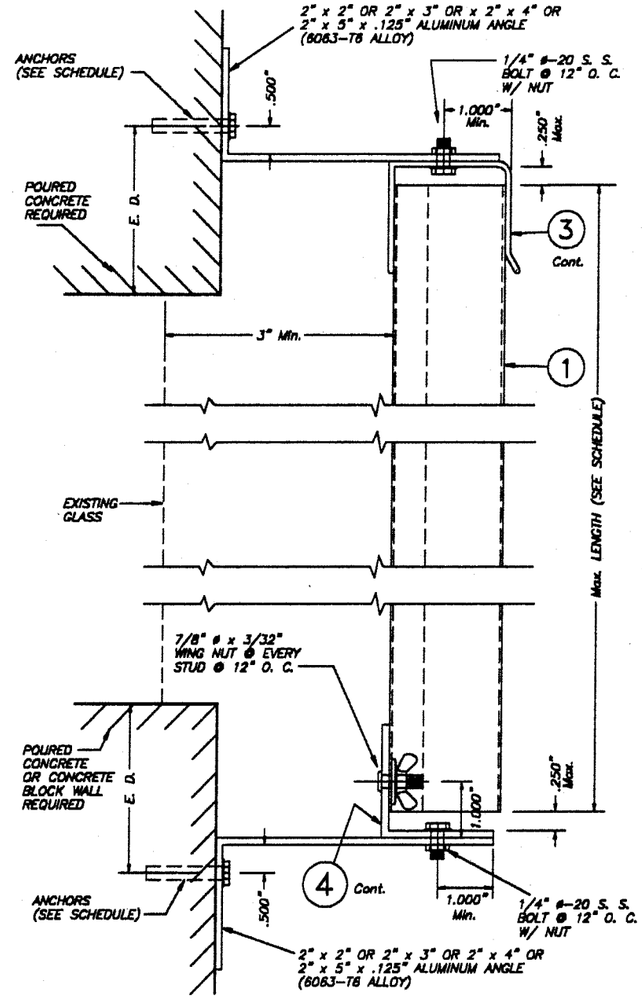

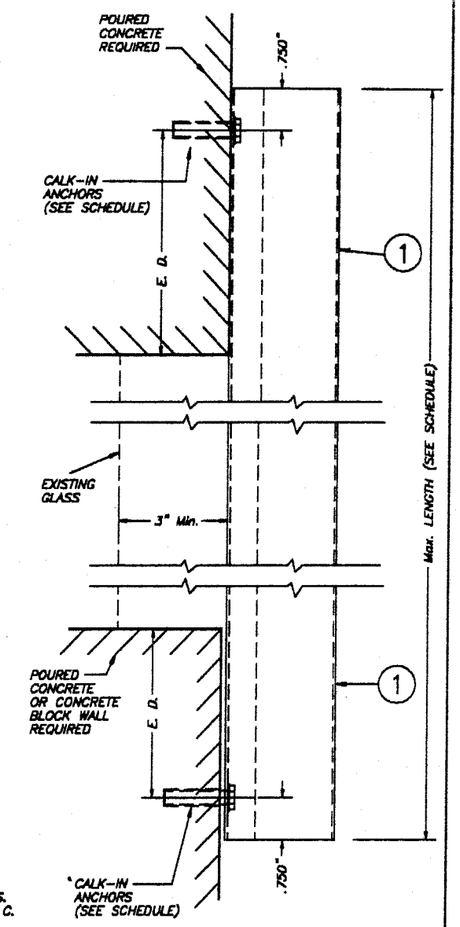

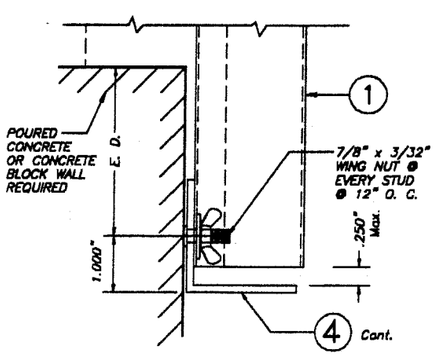

SECTION @ STUDS (BOTTOM)

WALL MOUNTING INSTALLATION – SECTION 1

SCALE: 3/8" = 1"

ALTERNATE WALL MOUNTING INSTALLATION AT TOP – SECTION 1A

SCALE: 3/8" = 1"

CEILING & FLOOR MOUNTING INSTALLAT. – SECTION 2

SCALE: 3/8" = 1"

WALL MOUNTING INSTALLAT. (OFFSET) – SECTION 3

SCALE: 3/8" = 1"

WALL MOUNTING INSTALLAT. (D. M.) – SECTION 4

SCALE: 3/8" = 1"

E. D. = EDGE DISTANCE (SEE SCHEDULE ON SHEET 4 OF 6)

NOTE FOR COMBINATION OF SECTIONS :

WALL/FLOOR/CEILING MOUNTING SECTIONS CAN BE COMBINED IN ANY WAY TO SUIT ANY INSTALLATION.

PRODUCT REVISED
as complying with the Florida
Building Code
Acceptance No 03-0306.03
Expiration Date 05/22/2008
By Helmy A. Nasr
Miami Dade Product Control
Division

F.B.C. (H.V.H.Z.)/MIAMI-DADE COUNTY

FEB 27 2003

TILTECO INC.
TILLIT TESTING & ENGINEERING COMPANY
6595 N.W. 36th. St. Ste. 217, VIRGINIA GARDENS, FL. 33166
Phone : (305)871-1530 . Fax : (305)871-1531
EB-0006719
WALTER A. TILLIT Jr., P. E.
FLORIDA Lic. 44167

0.060" ALUMINUM STORM PANEL

D & D ALUMINUM DISTRIBUTORS, INC.
5970 FUNSTON ST.
HOLLYWOOD, FL. 33023

REV. NO	DESCRIPTION	DATE	REV. No	DESCRIPTION	DATE
1	OLD 98-262	2/28/03	3		
2	–	–	4		

AS SHOWN SCALE

2/26/03 DATE

03 – 044 DRAWING No

SHEET 2 OF 6

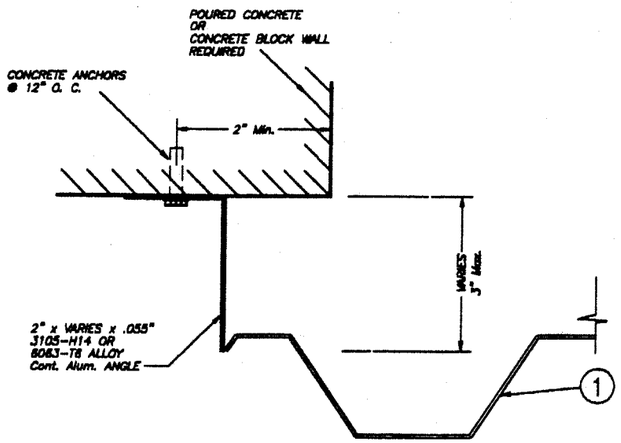

CASE A (Plan)

SCALE: 3/8" = 1"

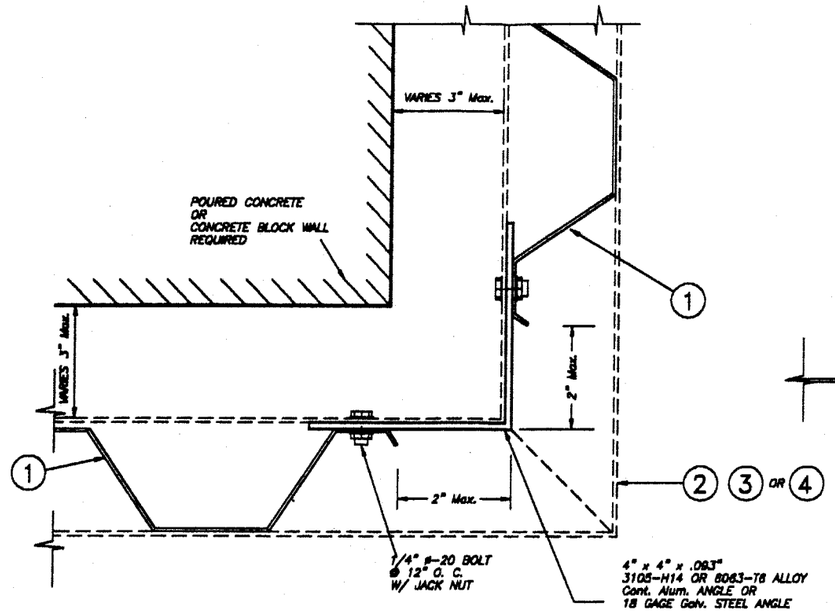

CASE B (Plan)

SCALE: 3/8" = 1"

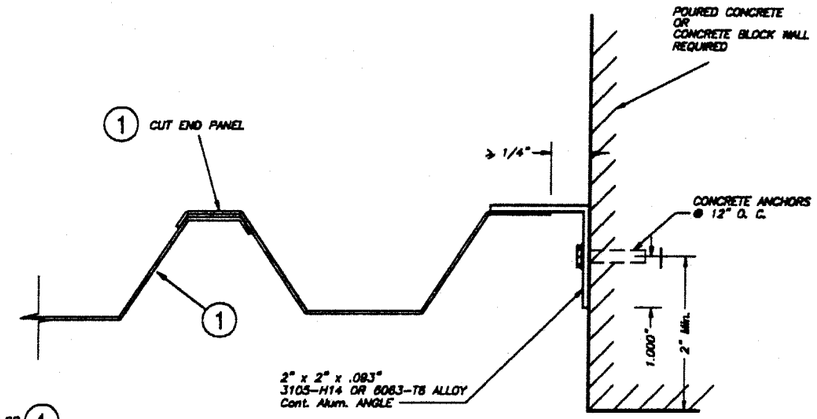

CASE C (Plan)

SCALE: 3/8" = 1"

END CLOSURES DETAILS

MAXIMUM DESIGN PRESSURE RATING "W" (p.s.f.) AND CORRESPONDING MAXIMUM PANEL LENGTH "L" SCHEDULE

MAXIMUM DESIGN PRESSURE RATING W (p.s.f.)	Max. PANEL LENGTH L (ft.) (SEE SECTIONS)	MINIMUM SEPARATION TO GLASS
+65.9, −72.0	9'−0"	3"

PRODUCT REVISED
as complying with the Florida
Buiding Code
Acceptance No 03-0306.03
Expiration Date 05/22/2008
By Helmy A. Moler
Miami Dade Product Control
Division

F.B.C. (H.V.H.Z.)/MIAMI-DADE COUNTY

FEB 27 2003

TILTECO INC.
TILLIT TESTING & ENGINEERING COMPANY
6505 N.W. 36th. St., Ste. 217, VIRGINIA GARDENS, FL. 33166
Phone : (305)871-1330 . Fax : (305)871-1331
EB-0006719
WALTER A. TILLIT Jr., P. E.
FLORIDA Lic. 44157

0.060" ALUMINUM STORM PANEL

D & D ALUMINUM DISTRIBUTORS, INC.
5970 FUNSTON ST.
HOLLYWOOD, FL. 33023

REV. NO	DESCRIPTION	DATE	REV. No	DESCRIPTION	DATE
1	OLD 98-262	2/26/03	3		
2	–	–	4		

AS SHOWN
SCALE

2/26/03
DATE

03 – 044
DRAWING No

SHEET 3 OF 6

MAXIMUM DESIGN PRESSURE RATING "W" (p.s.f.) AND CORRESPONDING MAXIMUM ANCHOR SPACING SCHEDULE FOR INSTALLATIONS INTO CONCRETE AND CONCRETE BLOCK STRUCTURES *

E. D. = EDGE DISTANCE

MAXIMUM DESIGN LOAD W (p.s.f.)	MAXIMUM ANCHORS SPACING **						APPLICABLE TO SECTIONS # & ANY COMBINATION OF THEM	MAXIMUM PANEL LENGTH "L" (ft.)
	TAPCONS		ZAMAC NAILIN		CALK-IN			
	TO CONCRETE	TO MASONRY	TO CONCRETE	TO MASONRY	TO CONCRETE	TO MASONRY		
+65.9, -72.0	12"	N/A	8 1/2"	N/A	12"	N/A	1 (TOP)	5'-9" OR LESS
	12"	12"	12"	12"	12"	12"	1 (BOTTOM)	
	12"	N/A	12"	N/A	12"	N/A	1A (TOP)	
	12"	12"	12"	12"	12"	12"	1A (BOTTOM)	
	12"	N/A	12"	N/A	12"	N/A	3 (TOP)	
	12"	12"	12"	12"	12"	12"	3 (BOTTOM)	
	12"	N/A	12"	N/A	12"	N/A	2 (TOP)	
	12"	N/A	11"	N/A	12"	N/A	2 (BOTTOM)	
	N/A	N/A	N/A	N/A	12" ***	12" ***	4 (TOP/BOTTOM)	
+65.9, -72.0	9"	N/A	4 1/2"	N/A	9"	N/A	1 (TOP)	5'-9" TO 8'-0"
	8"	8"	8 1/2"	8 1/2"	12"	12"	1 (BOTTOM)	
	12"	N/A	12"	N/A	12"	N/A	1A (TOP)	
	8"	8"	10"	10"	12"	12"	1A (BOTTOM)	
	12"	N/A	12"	N/A	12"	N/A	3 (TOP)	
	12"	8 1/2"	12"	10"	12"	12"	3 (BOTTOM)	
	12"	N/A	9 1/2"	N/A	12"	N/A	2 (TOP)	
	12"	N/A	8"	N/A	12"	N/A	2 (BOTTOM)	
	N/A	N/A	N/A	N/A	12" ***	12" ***	4 (TOP/BOTTOM)	
+65.9, -72.0	7 1/2"	N/A	4"	N/A	7 1/2"	N/A	1 (TOP)	8'-0" TO 9'-0"
	7"	7"	8"	8"	11"	11"	1 (BOTTOM)	
	12"	N/A	12"	N/A	12"	N/A	1A (TOP)	
	7"	7"	8"	8"	9"	9"	1A (BOTTOM)	
	12"	N/A	12"	N/A	12"	N/A	3 (TOP)	
	7"	7"	8"	8"	9"	9"	3 (BOTTOM)	
	12"	N/A	8 1/2"	N/A	12"	N/A	2 (TOP)	
	10"	N/A	7"	N/A	11"	N/A	2 (BOTTOM)	
	N/A	N/A	N/A	N/A	12" ***	6" ***	4 (TOP/BOTTOM)	

* SEE SHEET 5 & 6 OF 6 FOR ANCHORS TYPE & SPACING FOR INSTALLATIONS INTO WOOD FRAME BUILDINGS.

** MAXIMUM ANCHOR SPACINGS ARE VALID FOR 3 1/2" EDGE DISTANCE. FOR E. D. LESS THAN 3 1/2", REDUCE ANCHOR SPACING BY MULTIPLYING SPACINGS SHOWN ON SCHEDULE BY THE FOLLOWING FACTORS. (Min. E. D. FOR CALK-IN ANCHORS IS 2 1/2").

ACTUAL E. D.	FACTOR	
	TAPCON/ZAMAC NAILIN	CALK-IN
3"	.86	.75
2 1/2"	.71	.50
2"	.50	–

*** DIRECT MOUNT CONNECTION TO WALL W/ ANCHORS AT 12" O. C., AND Max. PANEL LENGTHS SHOWN ON THE SCHEDULE SHALL ALWAYS BE PERFORMED W/ 3 1/2" EDGE DISTANCE (E. D.). USE MAXIMUM ANCHORS SPACING OF 6" O. C. FOR DIRECT MOUNT INSTALLATION WHERE E. D. IS LESS THAN 3 1/2" WITH A MINIMUM OF 2 1/2"

PRODUCT REVISED
as complying with the Florida Building Code
Acceptance No 03-0306.03
Expiration Date 05/22/2008
By Helmy A. Abdelsalam
Miami Dade Product Control Division

F.B.C. (H.V.H.Z.)/MIAMI-DADE COUNTY

FEB 27 2003

TILTECO INC.
TILLIT TESTING & ENGINEERING COMPANY
8595 N.W. 36th. St., Ste. 217, VIRGINIA GARDENS, Fl. 33166
Phone : (305)871-1530 . Fax : (305)871-1531
EB-0006719
WALTER A. TILLIT Jr., P. E.
FLORIDA Lic. 44167

0.060" ALUMINUM STORM PANEL

D & D ALUMINUM DISTRIBUTORS, INC.
5970 FUNSTON ST.
HOLLYWOOD, FL. 33023

REV. NO	DESCRIPTION	DATE	REV. No	DESCRIPTION	DATE
1	OLD 96-262	2/26/03	3		
2	–	–	4		

AS SHOWN SCALE
2/26/03 DATE
03 – 044 DRAWING No
SHEET 4 OF 6

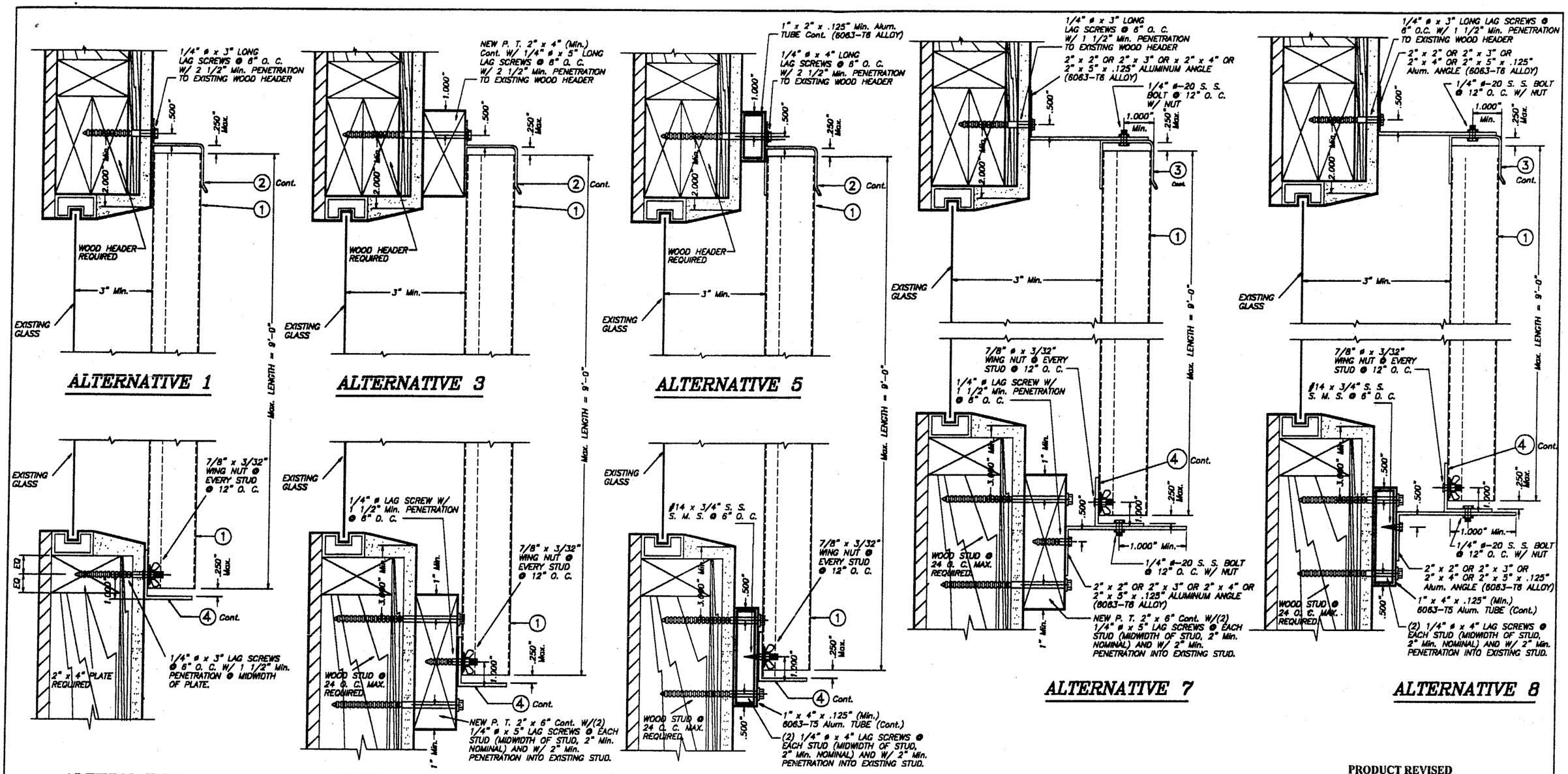

INSTALLATION DETAILS ON EXISTING WOOD BUILDINGS

WALL MOUNTING INSTALLATION – SECTION A

SCALE: 1/4" = 1"

PRODUCT REVISED
as complying with the Florida
Buiding Code
Acceptance No 03-0306.03
Expiration Date 05/22/2008
By [signature]
Miami Dade Product Control
Division

NOTE FOR COMBINATION OF SECTIONS :

WALL/FLOOR/CEILING MOUNTING SECTIONS CAN BE COMBINED IN ANY WAY TO SUIT ANY INSTALLATION.

NOTES:

1. INSTALLATIONS ARE ONLY VALID FOR BUILDINGS WITH DESIGN LOADS UP TO +65.9, −72.0 psf. AND 9'−0" Max. PANEL LENGTH.
2. NEW 2" x 6" P. T. TO BE SOUTHERN PINE No. 2, SURFACED DRY WITH 19 % M. M. C. W/ SPECIFIC DENSITY OF 0.55.
3. FOR NEW WOOD FRAME CONSTRUCTION: WOOD MEMBERS TO BE SOUTHERN PINE No. 2, W/ SPECIFIC DENSITY OF 0.55 OR EQUAL.

FEB 27 2003

F.B.C. (H.V.H.Z.)/MIAMI-DADE COUNTY

TILTECO INC.
TILLIT TESTING & ENGINEERING COMPANY
6595 N.W. 36th. St., Ste. 217, VIRGINIA GARDENS, FL. 33166
Phone : (305)871-1530 . Fax : (305)871-1531
EB-0006719
WALTER A. TILLIT Jr., P. E.
FLORIDA Lic. 44167

0.060" ALUMINUM STORM PANEL

D & D ALUMINUM DISTRIBUTORS, INC.
5970 FUNSTON ST.
HOLLYWOOD, FL. 33023

REV. NO	DESCRIPTION	DATE	REV. No	DESCRIPTION	DATE
1	OLD 96-262	2/26/03	3		
2	–	–	4		

AS SHOWN SCALE
2/26/03 DATE
03 – 044 DRAWING No
SHEET 5 OF 6

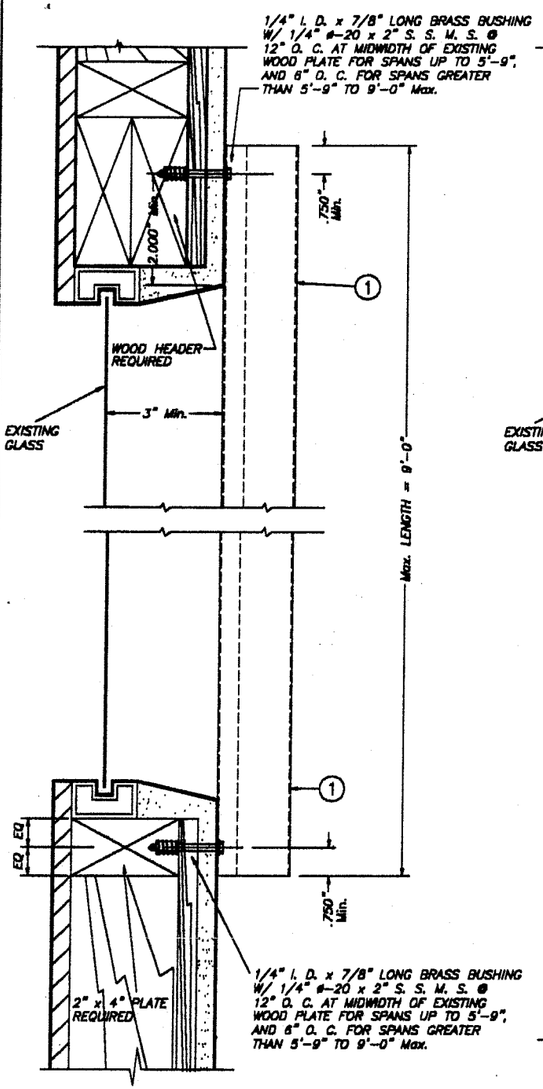

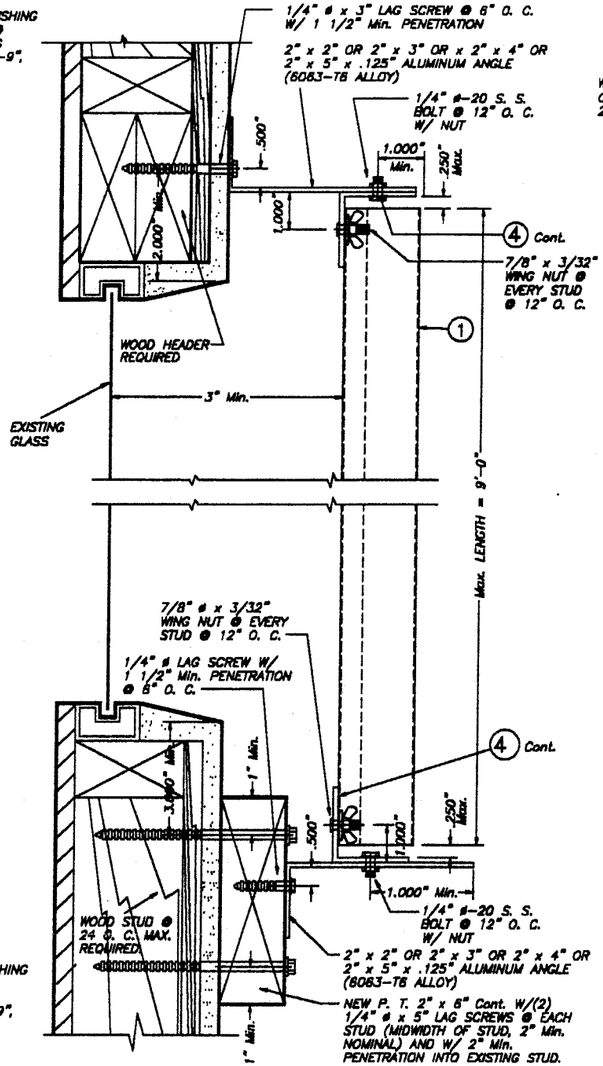

ALTERNATIVE 9

ALTERNATIVE 10

WALL MOUNTING INSTALLATIONS – SECTION A

SCALE: 1/4" = 1"

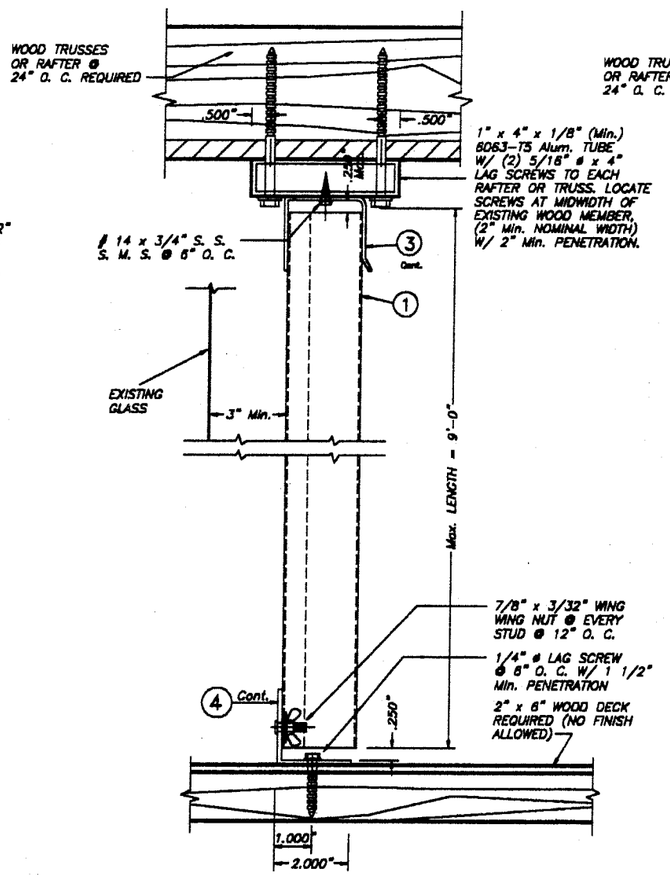

ALTERNATIVE 1

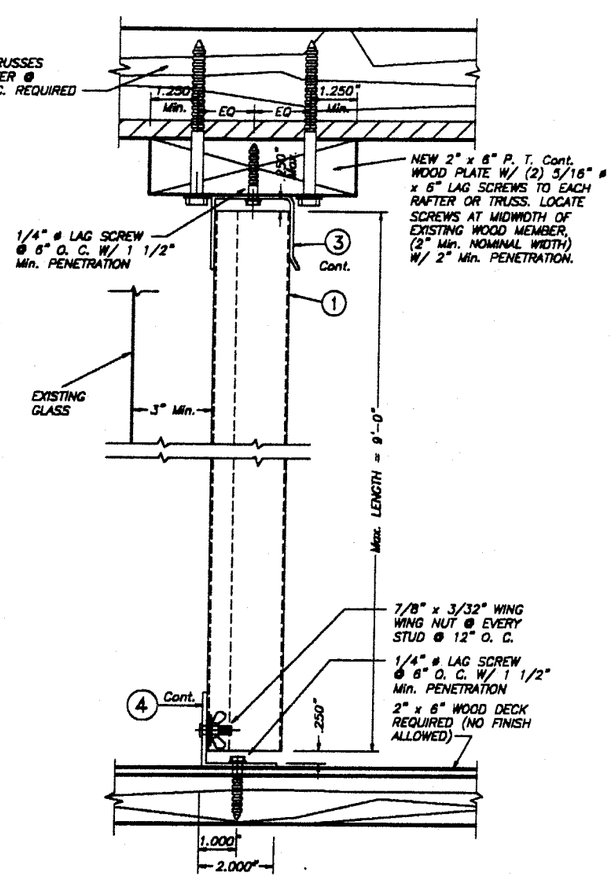

ALTERNATIVE 2

CEILING & FLOOR MOUNTING INSTALLATIONS – SECTION B

SCALE: 1/4" = 1"

INSTALLATION DETAILS ON EXISTING WOOD BUILDINGS

PRODUCT REVISED
as complying with the Florida Buiding Code
Acceptance No 03-0306.03
Expiration Date 03/22/2008
By Helena A. Molina
Miami Dade Product Control Division

F.B.C. (H.V.H.Z.)/MIAMI-DADE COUNTY

NOTE FOR COMBINATION OF SECTIONS :

WALL/FLOOR/CEILING MOUNTING SECTIONS CAN BE COMBINED IN ANY WAY TO SUIT ANY INSTALLATION.

NOTES:

1. INSTALLATIONS ARE ONLY VALID FOR BUILDINGS WITH DESIGN LOADS UP TO +65.9, −72.0 psf. AND 9'-0" Max. PANEL LENGTH.
2. NEW 2" x 6" P. T. TO BE SOUTHERN PINE No. 2, SURFACED DRY WITH 19 % M. M. C. W/ SPECIFIC DENSITY OF 0.55.
3. FOR NEW WOOD FRAME CONSTRUCTION: WOOD MEMBERS TO BE SOUTHERN PINE No. 2, W/ SPECIFIC DENSITY OF 0.55 OR EQUAL.

FEB 27 2003

TILTECO INC.
TILLIT TESTING & ENGINEERING COMPANY
8305 N.W. 38th. St., Ste. 217, VIRGINIA GARDENS, FL. 33166
Phone : (305)871-1530 Fax : (305)871-1531
EB-0006719
WALTER A. TILLIT Jr., P. E.
FLORIDA Lic. 44167

0.060" ALUMINUM STORM PANEL

AS SHOWN SCALE

D & D ALUMINUM DISTRIBUTORS, INC.
5970 FUNSTON ST.
HOLLYWOOD, FL. 33023

2/26/03 DATE

03 – 044 DRAWING No

REV. NO	DESCRIPTION	DATE	REV. No	DESCRIPTION	DATE
1	OLD 98-282	2/26/03	3		
2	–	–	4		

SHEET 6 OF 6