MIAMI-DADE

BUILDING CODE COMPLIANCE OFFICE (BCCO)
PRODUCT CONTROL DIVISION

MIAMI-DADE COUNTY, FLORIDA
METRO-DADE FLAGLER BUILDING
140 WEST FLAGLER STREET, SUITE 1603
MIAMI, FLORIDA 33130-1563
(305) 375-2901 FAX (305) 375-2908

NOTICE OF ACCEPTANCE (NOA)

The Cookson Company.
2417 South 50th Avenue.
Phoenix, AZ 85043

Scope. This NOA is being issued under the applicable rules and regulations governing the use of construction materials. The documentation submitted has been reviewed by Miami-Dade County Product Control Division and accepted by the Board of Rules and Appeals (BORA) to be used in Miami Dade County and other areas where allowed by the Authority Having Jurisdiction (AHJ).

This NOA shall not be valid after the expiration date stated below. The Miami-Dade County Product Control Division (In Miami Dade County) and/or the AHJ (in areas other than Miami Dade County) reserve the right to have this product or material tested for quality assurance purposes. If this product or material fails to perform in the accepted manner, the manufacturer will incur the expense of such testing and the AHJ may immediately revoke, modify, or suspend the use of such product or material within their jurisdiction. BORA reserves the right to revoke this acceptance, if it is determined by Miami-Dade County Product Control Division that this product or material fails to meet the requirements of the applicable building code.
This product is approved as described herein, and has been designed to comply with the High Velocity Hurricane Zone of the Florida Building Code.

DESCRIPTION: 16' wide # 5 slat Roll-Up Door.

APPROVAL DOCUMENT: Drawing No. NPD-0050-03, dated 01/24/00, with last revision on 01/21/00, titled "DADE COUNTY TEST DOORS, 16'-0" 60/55 PSF., sheets 1 through 3 of 3, prepared by Cookson Rolling Doors, signed and sealed by J. H. Dixon Jr PE, bearing the Miami-Dade County Product Control Renewal stamp with the Notice of Acceptance number and expiration date by the Miami-Dade County Product Control Division.

MISSILE IMPACT RATING: Large and Small Missile Impact

LABELING: Each unit shall bear a permanent label with the manufacturer's name or logo, city, state and following statement: "Miami-Dade County Product Control Approved", unless otherwise noted herein.

RENEWAL of this NOA shall be considered after a renewal application has been filed and there has been no change in the applicable building code negatively affecting the performance of this product.

TERMINATION of this NOA will occur after the expiration date or if there has been a revision or change in the materials, use, and/or manufacture of the product or process. Misuse of this NOA as an endorsement of any product, for sales, advertising or any other purposes shall automatically terminate this NOA. Failure to comply with any section of this NOA shall be cause for termination and removal of NOA.

ADVERTISEMENT: The NOA number preceded by the words Miami-Dade County, Florida, and followed by the expiration date may be displayed in advertising literature. If any portion of the NOA is displayed, then it shall be done in its entirety.

INSPECTION: A copy of this entire NOA shall be provided to the user by the manufacturer or its distributors and shall be available for inspection at the job site at the request of the Building Official.
This NOA **renews NOA # 99-1203.07** and, consists of this page 1 as well as approval document mentioned above.
The submitted documentation was reviewed by **Candido E. Font PE.**

4/14/3

PRODUCT CONTROL ACCEPTED

The Cookson Company.

NOTICE OF ACCEPTANCE: EVIDENCE SUBMITTED

(For File ONLY. Not part of NOA)

A DRAWING:

1. Drawing No. NPD-0050-03, titled "DADE COUNTY TEST DOOR 16'-0" 60/50 PSF", sheet 1 through 1 of 3, prepared by Cookson Rolling Door, dated 01/24/00, with latest revision on 01/21/00, signed and sealed by J.H.Dixon, PE.

B TEST:

1. Test report on Large Missile Impact Test, Cyclic Wind Pressure Test and Uniform Static Air Pressure Test on a "Steel Rolling Garage Door", prepared by Certified Testing Laboratories, report # CTLA468W, dated 11/10/99, signed and sealed by R. Patel, PE.

C CALCULATIONS:

1. Calculations prepared by Joseph H. Dixon, Jr. P.E. dated 01/23/99 with latest revision on 01/24/00, sheets 1 to 10 for 16 ft. wide door and sheets 1 to 10 for 12 ft. wide door, signed and sealed by J. H. Dixon, PE. on 01/25/00.

D STATEMENTS:

1. No financial interest letter issued by The Cookson Company, on 11/23/99, signed by E. J. Elliot and notarized by M. A. Montoya on 11/23/99.
2. Code compliance statement issued by J. H. Dixon, PE, on 11/09/99, signed and sealed by J. H. Dixon, PE.

E. MATERIAL CERTIFICATION:

1. Certified Testing Laboratories, Test Report # 99020 of test per ASTM E8, of .032" Steel, dated 10/20/99, signed by R. Patel, P.E.
2. No change letter issued by The Cookson Company on 04/02/03 and signed by E. Elliot, PE.

Candido F. Font PE
Senior Product Control Examiner
NOA No 03-0325.05
Expiration Date: March 10, 2008
Approval Date: May 08, 2003

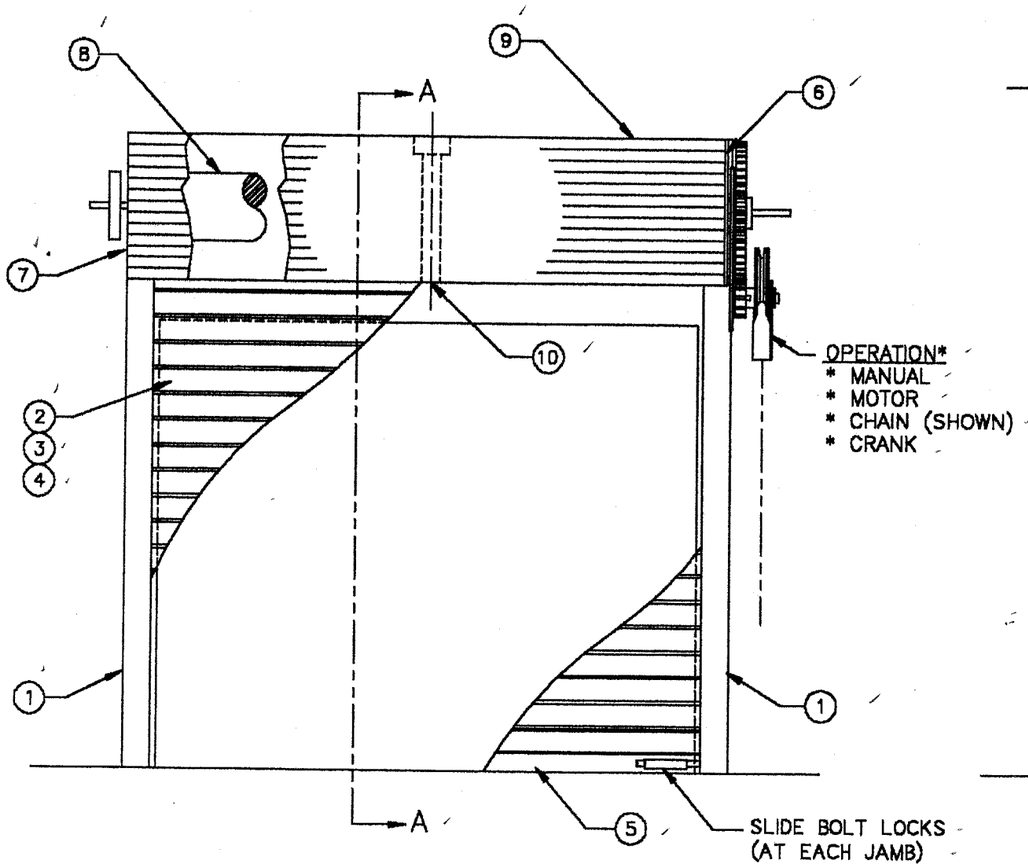

COIL-SIDE ELEVATION

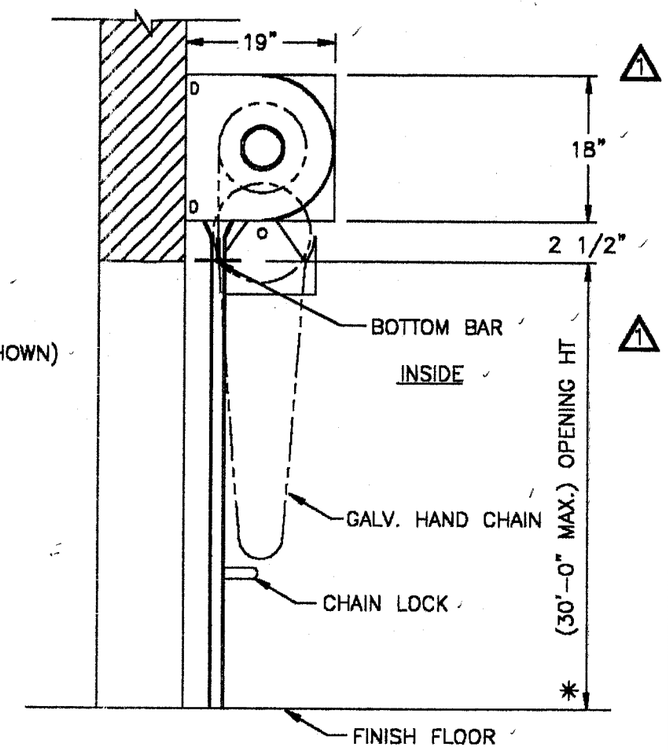

SECTION A-A

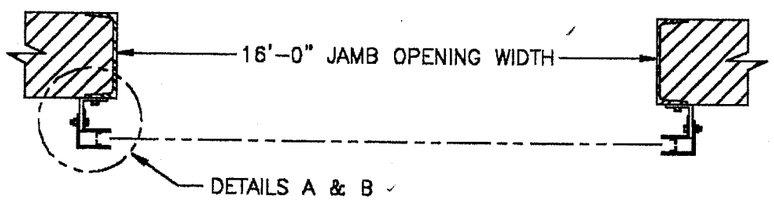

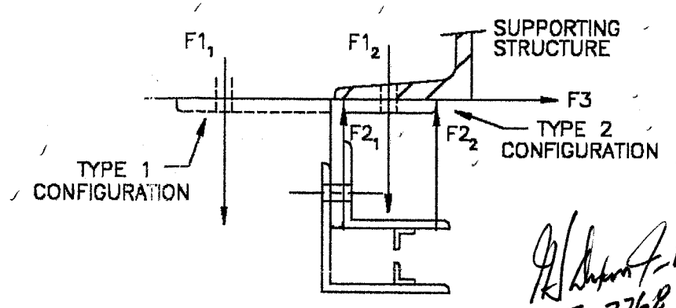

TABLE OF CONTENTS	
SHEET #	DESCRIPTION
1	GENERAL NOTES AND ELEVATION
2	CROSS SECTIONS AND DETAILS
3	FORCE TABLE, FASTENER SCHEDULE & PARTS LIST

NOTES:

1. THIS DRAWING HAS BEEN APPROVED AS COMPLYING WITH THE SOUTH FLORIDA BUILDING CODE.
2. THIS DOOR HAS BEEN TESTED TO PA 201,PA 202, & PA 203.
3. THE DOOR HAS A DESIGN PRESSURE OF 55lb/sq ft POS & 60lb/sq ft NEG.
4. ANCHOR BOLTS ARE HILTI KWIK BOLT-II INSTALLED ON 3000 PSI CONCRETE.
5. WALL ANGLE BOLTS TO BE GRADE 5.
6. TYPE E60 OR HIGHER ELECTRODES TO BE USED FOR WELDED ATTACHMENT.
7. HOOD IS BOLTED TO BRKT. PLATE WITH #10 TEK SCREWS. INTERMEDIATE SUPPORT IS FURNISHED FOR DOORS OVER 14' WIDE.
8. CURTAIN IS FASTENED TO BARREL WITH 3/8" BOLTS.
9. SLATS ARE COLD ROLLED GALV. STEEL WITH A YIELD STRENGTH OF 49,400 P.S.I.. STRUCTURAL QUALITY,GRADE 50 ASTM A 653.
10. WINDLOCKS ARE CAST DUCTILE IRON, ON ALTERNATING SLATS.
11. WINDLOCKS/ENDLOCKS ARE ATTACHED TO SLATS WITH ø3/16" PLATED STEEL RIVETS.
12. WINDLOCK BAR MATERIAL: 1/2" X 1/2" X 1/8" STEEL ANGLES, ASTM A36, (DETAIL A).

NO.	BY	DATE	REVISION
3			
2			
1	YL	01/21/00	AS NOTED
	YL	10/19/99	ORIGINAL DRAWING

COOKSON ROLLING DOORS
2417 S. 50th AVENUE
PHOENIX, AZ 85043
800 TULIP DRIVE
GASTONIA, NC 28052

DADE COUNTY TEST DOOR 16'-0" 60/55 PSF

ENG. NAME: JOSEPH H. DIXON JR.	COOKSON APPROVAL
DISCIPLINE: STRUCTURAL	BY:
FL REGISTRATION: 7768	DATE: 01 24 00
DRAWING NO. NPD-0050-03	SHEET 1 OF 3

PRODUCT RENEWED
as complying with the Florida Building Code
Acceptance No. 03-0325.05
Expiration Date 3/10/05
By
Miami Dade Product Control Division

APPROVED AS COMPLYING WITH THE SOUTH FLORIDA BUILDING CODE
DATE March 10, 2000
BY
PRODUCT CONTROL DIVISION
BUILDING CODE COMPLIANCE OFFICE
ACCEPTANCE NO. 99-1203.07

FL 7768
1/25/2000

DADE COUNTY WIND DOOR 16'-0" WIDE #5 SLAT

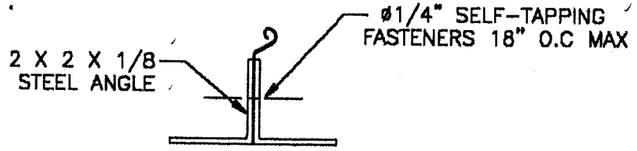

BOTTOM BAR DETAIL (5)

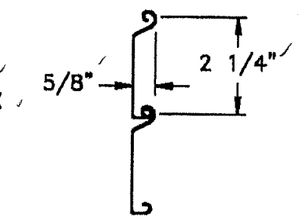

(2) SLAT: #5 – .0296

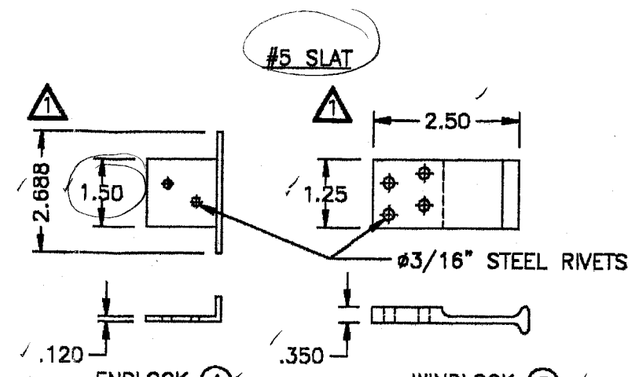

ENDLOCK (4)
11GA PLATED STEEL

WINDLOCK (3)
PLATED CAST IRON

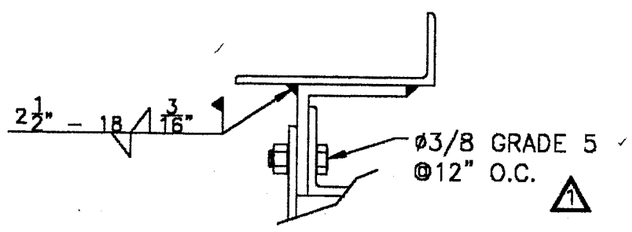

DETAIL B
WELDING TO STEEL JAMB
SIM. TO DETAIL A
EXCEPT AS NOTED
(FOR TYPE 2 GUIDE ONLY)

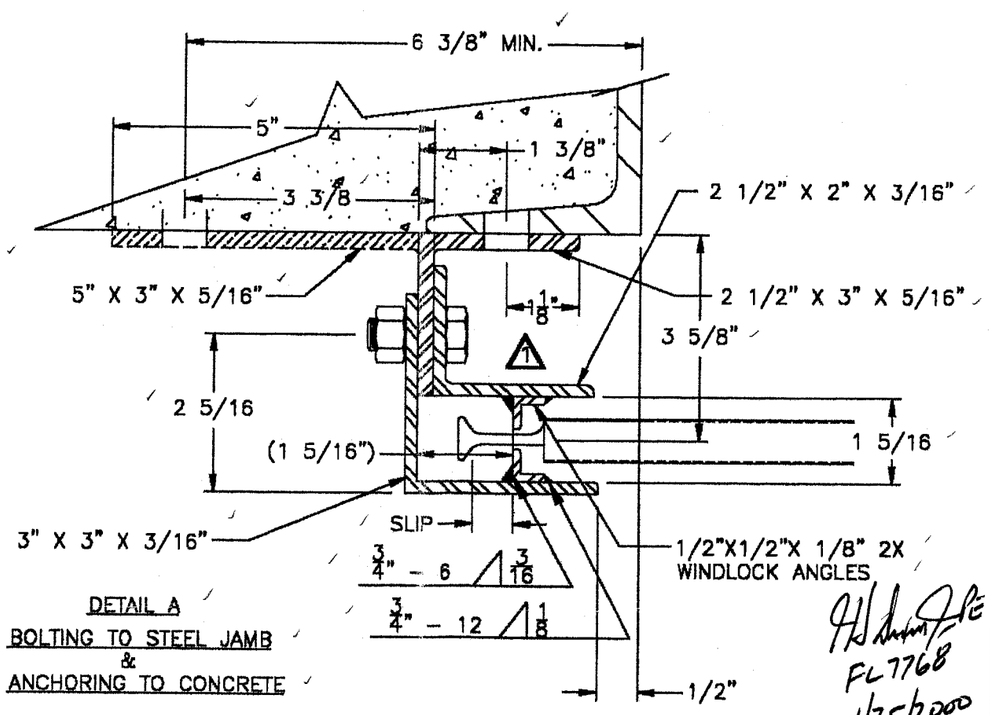

DETAIL A
BOLTING TO STEEL JAMB
&
ANCHORING TO CONCRETE

FL 7768
1/25/2000

NO.	BY	DATE	REVISION
3			
2			
1	YL	01/21/00	AS NOTED
	YL	10/19/99	ORIGINAL DRAWING

COOKSON ROLLING DOORS
2417 S. 50th AVENUE
PHOENIX, AZ 85043
800 TULIP DRIVE
GASTONIA, NC 28052

DADE COUNTY TEST DOOR 16'–0" 60/55 PSF

ENG. NAME: JOSEPH H. DIXON JR.
DISCIPLINE: STRUCTURAL
FL REGISTRATION: 7768

COOKSON APPROVAL
BY:
DATE: 01/24/00

DRAWING NO. NPD–0050–03
SHEET 2 OF 3

PRODUCT RENEWED
as complying with the Florida
Building Code
Acceptance No. 03-0325.05
Expiration Date 3/10/08
By
Miami Dade Product Control
Division

APPROVED AS COMPLYING WITH THE
SOUTH FLORIDA BUILDING CODE
DATE March 10, 2000
BY
PRODUCT CONTROL DIVISION
BUILDING CODE COMPLIANCE OFFICE
ACCEPTANCE NO. 99-1203.07

DADE COUNTY WIND DOOR 16'–0" WIDE #5 SLAT

FORCE ON STRUCTURE (#/FT.)

OPENING WIDTH	TYPE 1 GUIDE CONFIGURATION (1)						TYPE 2 GUIDE CONFIGURATION (1)					
	POSITIVE (55 PSF)			NEGATIVE (60 PSF)			POSITIVE (55 PSF)			NEGATIVE (60 PSF)		
	F1	F2	F3	F1	F2	F3	F1	F2	F3	F1	F2	F3
UP TO 12'-0"	1118	786	1180	1582	1944	1312	4166	3834	1180	3903	4266	1312
12'-1" TO 16'-0"	2046	1603	2085	2692	3175	2289	7218	6776	2085	6956	7439	2289

FASTENER SCHEDULE

OPENING WIDTH	(1) WINDLOCK SPACING	SLIP	GUIDE ANGLE THICKNESS	WALL ANGLE THICKNESS	CONCRETE ANCHOR	MIN EMBED-MENT	(2) WALL ANGLE BOLTS (GRADE 5)	GUIDE ANGLE ASSEMBLY BOLTS
UP TO 12'-0"	2	5/8"	3/16"	5/16"	1/2ø @ 12" O.C.	3 1/2"	1/2ø @ 18" O.C.	3/8ø @ 12" O.C.
12'-1" TO 16'-0"	2	5/8"	3/16"	5/16"	3/4ø @ 12" O.C.	4 3/4"	5/8ø @ 18" O.C.	3/8ø @ 12" O.C.

(1) (1) WINDLOCK ON EVERY OTHER SLAT

(1) (2) 1 3/8 O.D. X 1/8 THICK WASHER

PARTS LIST

ITEM NO.	DESCRIPTION	QTY.	MATERIAL
1	GUIDE (PAIR)	1	STEEL, ASTM A-36
2	GALVANIZED SLAT	AS REQ'D	GALVANIZED STEEL, G90 ASTM A-653 SQ. GRADE 50
3	WINDLOCK	AS REQ'D	DUCTILE CAST IRON, GRADE 65-45-12 ASTM A-536-72
4	ENDLOCK	AS REQ'D	C101B STEEL, ASTM A-366
5	BOTTOM BAR	1	STEEL, ASTM A-36
6	DRIVE BRACKET ASSEMBLY	1	STEEL, ASTM A-36
7	TENSION BRACKET ASSEMBLY	1	STEEL, ASTM A-36
8	BARREL PIPE/COUNTER BALANCE		STEEL, ASTM A-108, A-229, A-53
9	GALVANIZED HOOD	1	GALVANIZED STEEL, G90 ASTM A-653
10	HOOD SUPPORT	AS REQ'D	STEEL, ASTM A-36

(1)

H. Dixon Jr. PE
FL 7768
1/25/2000

DADE COUNTY WIND DOOR 16'-0" WIDE #5 SLAT

NO.	BY	DATE	REVISION
3			
2			
1	YL	01/21/00	AS NOTED
	YL	10/19/99	ORIGINAL DRAWING

COOKSON ROLLING DOORS
2417 S. 50th AVENUE
PHOENIX, AZ 85043
800 TULIP DRIVE
GASTONIA, NC 28052

DADE COUNTY TEST DOOR 16'-0" 60/55 PSF

ENG. NAME: JOSEPH H. DIXON JR.

DISCIPLINE: STRUCTURAL

FL REGISTRATION: 7768

COOKSON APPROVAL

BY:

DATE: 01/24/00

DRAWING NO. NPD-0050-03

SHEET 3 OF 3

PRODUCT RENEWED
as complying with the Florida Building Code
Acceptance No. 03-0325.05
Expiration Date 3/10/08
By
Miami Dade Product Control Division

APPROVED AS COMPLYING WITH THE SOUTH FLORIDA BUILDING CODE
DATE March 10, 2000
BY
PRODUCT CONTROL DIVISION
BUILDING CODE COMPLIANCE OFFICE
ACCEPTANCE NO. 99-1203.07