MIAMI-DADE

BUILDING CODE COMPLIANCE OFFICE (BCCO)
PRODUCT CONTROL DIVISION

MIAMI-DADE COUNTY, FLORIDA
METRO-DADE FLAGLER BUILDING
140 WEST FLAGLER STREET, SUITE 1603
MIAMI, FLORIDA 33130-1563
(305) 375-2901 FAX (305) 375-2908

NOTICE OF ACCEPTANCE (NOA)

Luxbau, LLC
2400 Centrepark West Dr. #150
West Palm Beach, FL 33409

SCOPE:
This NOA is being issued under the applicable rules and regulations governing the use of construction materials. The documentation submitted has been reviewed by Miami-Dade County Product Control Division and accepted by the Board of Rules and Appeals (BORA) to be used in Miami Dade County and other areas where allowed by the Authority Having Jurisdiction (AHJ).

This NOA shall not be valid after the expiration date stated below. The Miami-Dade County Product Control Division (In Miami Dade County) and/or the AHJ (in areas other than Miami Dade County) reserve the right to have this product or material tested for quality assurance purposes. If this product or material fails to perform in the accepted manner, the manufacturer will incur the expense of such testing and the AHJ may immediately revoke, modify, or suspend the use of such product or material within their jurisdiction. BORA reserves the right to revoke this acceptance, if it is determined by Miami-Dade County Product Control Division that this product or material fails to meet the requirements of the applicable building code.

This product is approved as described herein, and has been designed to comply with the High Velocity Hurricane Zone of the Florida Building Code.

DESCRIPTION: Luxbaum Windows & Doors Wood Fixed Window

APPROVAL DOCUMENT: Drawing No. **1188,** titled "Luxbaum Windows & Doors Wooden Fixed Window System", sheets 1 through 4 of 4, prepared by W.W. Schaefer Engineering & Consulting, P.A., dated 11/18/02, signed and sealed by Warren Schaefer, P.E., bearing the Miami-Dade County Product Control Approval stamp with the Notice of Acceptance number and approval date by the Miami-Dade County Product Control Division.

MISSILE IMPACT RATING: Large and Small Missile Impact

LABELING: Each unit shall bear a permanent label with the manufacturer's name or logo, city, state and following statement: "Miami-Dade County Product Control Approved", unless otherwise noted herein.

RENEWAL of this NOA shall be considered after a renewal application has been filed and there has been no change in the applicable building code negatively affecting the performance of this product.

TERMINATION of this NOA will occur after the expiration date or if there has been a revision or change in the materials, use, and/or manufacture of the product or process. Misuse of this NOA as an endorsement of any product, for sales, advertising or any other purposes shall automatically terminate this NOA. Failure to comply with any section of this NOA shall be cause for termination and removal of NOA.

ADVERTISEMENT: The NOA number preceded by the words Miami-Dade County, Florida, and followed by the expiration date may be displayed in advertising literature. If any portion of the NOA is displayed, then it shall be done in its entirety.

INSPECTION: A copy of this entire NOA shall be provided to the user by the manufacturer or its distributors and shall be available for inspection at the job site at the request of the Building Official.
This NOA consists of this page 1 as well as approval document mentioned above.
The submitted documentation was reviewed by **Theodore Berman, P.E.**

5/7/03

PRODUCT CONTROL ACCEPTED

NOA No 03-0326.02
Expiration Date: May 29, 2008
Approval Date: May 29, 2003

Luxbau, LLC

NOTICE OF ACCEPTANCE: EVIDENCE SUBMITTED

(For File ONLY. Not part of NOA)

A. DRAWINGS

1. Manufacturer's die drawings and sections.
2. Drawing No. **1188,** titled "Luxbaum Windows & Doors Wooden Fixed Window System", sheets 1 through 4 of 4, prepared by W.W. Schaefer Engineering & Consulting, P.A., dated 11/18/02, signed and sealed by Warren Schaefer, P.E.

B. TESTS

1. Test reports on 1) Air Infiltration Test, per FBC, TAS 202-94
   2) Uniform Static Air Pressure Test, Loading per FBC, TAS 202-94
   3) Water Resistance Test, per FBC, TAS 202-94
   4) Large Missile Impact Test per FBC, TAS 201-94
   5) Cyclic Wind Pressure Loading per FBC, TAS 203-94

   along with marked-up drawings and installation diagram of a fixed wood window, prepared by Hurricane Test Laboratory, Inc., Test Report No. HTL 0271-0717.02 dated 7/24/02, signed and sealed by Vinu Abraham, P.E.
2. Test reports on 1) Air Infiltration Test, per FBC, TAS 202-94
   2) Uniform Static Air Pressure Test, Loading per FBC, TAS 202-94
   3) Water Resistance Test, per FBC, TAS 202-94
   4) Large Missile Impact Test per FBC, TAS 201-94
   5) Cyclic Wind Pressure Loading per FBC, TAS 203-94

   along with marked-up drawings and installation diagram of a fixed wood window, prepared by Hurricane Test Laboratory, Inc., Test Report No. HTL 0271-0119-03 dated 3/17/03, signed and sealed by Vinu Abraham, P.E.
3. Test reports on 1) Large Missile Impact Test per FBC, TAS 201-94
   2) Cyclic Wind Pressure Loading per FBC, TAS 203-94

   along with marked-up drawings and installation diagram of a fixed wood window, prepared by Hurricane Test Laboratory, Inc., Test Report No. HTL 0271-1010-02 dated 10/16/02, signed and sealed by Vinu Abraham, P.E.

C. CALCULATIONS

1. Anchor Calculations and structural analysis, prepared by W.W. Schaefer Engineering & Consulting, P.A., dated 1/7/02, signed and sealed by Warren Schaefer, P.E.

Theodore Berman, P.E.
Deputy Director, Product Control Division
NOA No 03-0326.02
Expiration Date: May 29, 2008
Approval Date: May 29, 2003

Luxbau, LLC

NOTICE OF ACCEPTANCE: EVIDENCE SUBMITTED
(For File ONLY. Not part of NOA)

D. MATERIAL CERTIFICATIONS

1. Notice of Proposed Action No. **01-1204.01**, issued to E.I. DuPont DeNemours for their "Sentry Glass Plus", approved on 1/17/02 and expiring on 1/14/07.
2. Notice of Proposed Action No. **02-1205.03**, issued to Security Impact Glass Holdings for their "SAF-GLAS", approved on 1/2/03 and expiring on 12/16/07.

E. STATEMENTS

1. Statement letter of conformance, dated 3/18/03, signed and sealed by Warren Schaefer, P.E.
2. Statement letter of no financial interest, dated 3/18/03, signed and sealed by Warren Schaefer, P.E.
3. Laboratory compliance letter for Test Report no. HTL 0271-0717.02, 0271-0119-03, 0271-1010-02, issued by Hurricane Test Laboratory, Inc., dated 2/20/03, signed and sealed by Vinu Abraham, P.E.

F. OTHER

1. Letter from the consultant stating that the product is in compliance with the Florida Building Code (FBC).

Theodore Berman, P.E.
Deputy Director, Product Control Division
NOA No 03-0326.02
Expiration Date: May 29, 2008
Approval Date: May 29, 2003

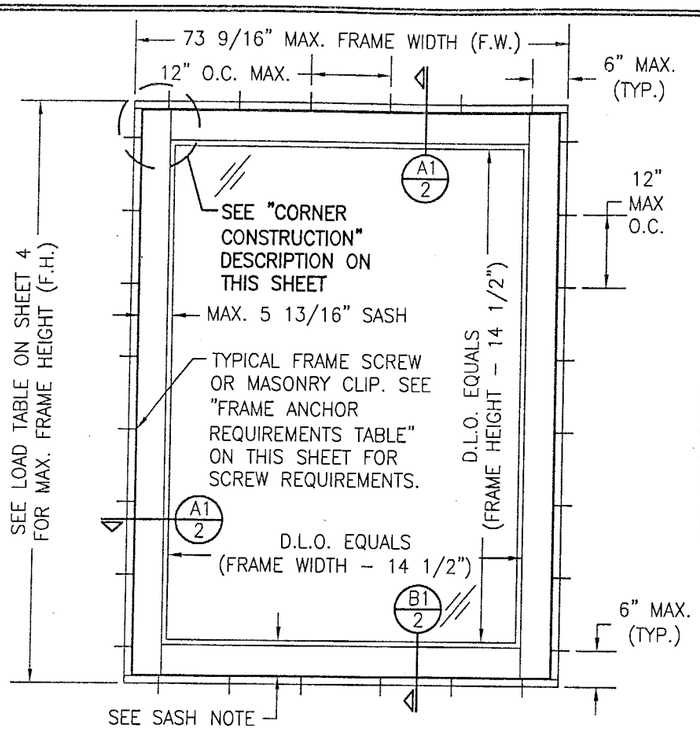

EXTERIOR ELEVATION
SINGLE WINDOW WITH 5 13/16" SASH
SCALE: 1/2"=1'-0"

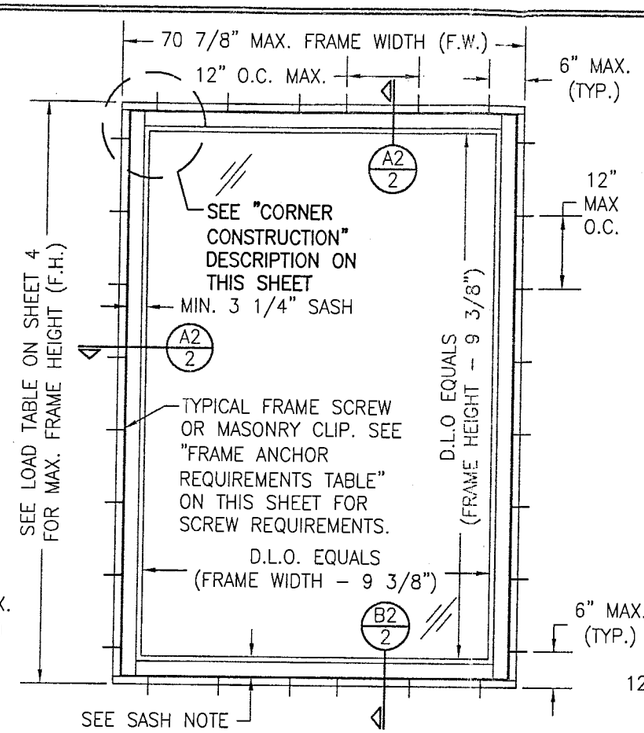

EXTERIOR ELEVATION
SINGLE WINDOW WITH 3 1/4" SASH
SCALE: 1/2"=1'-0"

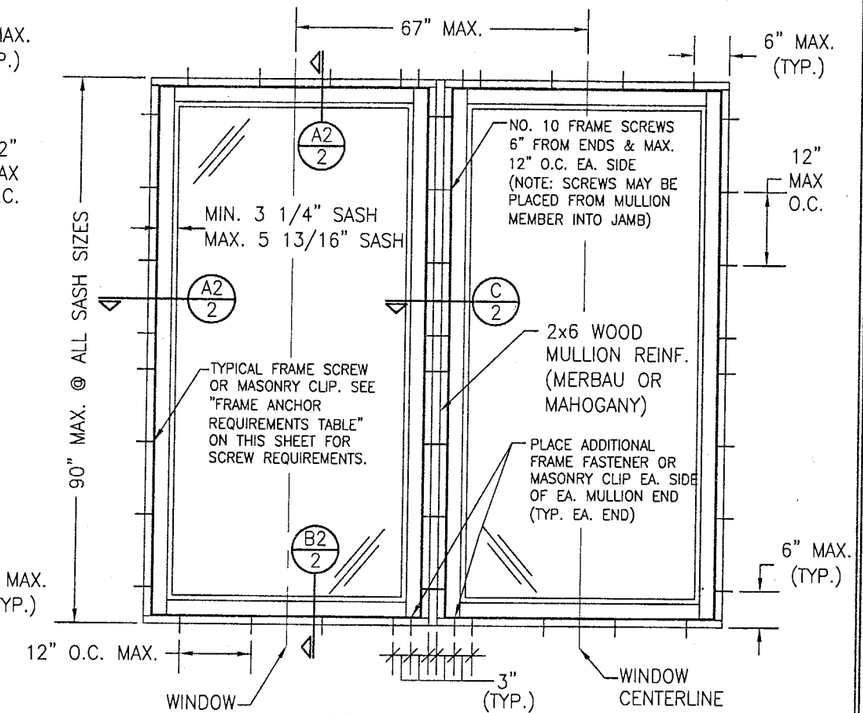

EXTERIOR ELEVATION
MULTIPLE WINDOW UNIT
(MAX. FOUR UNITS MAY BE COMBINED)
SEE OTHER ELEVATIONS FOR WINDOW DETAILS
SCALE: 1/2"=1'-0"

ALLOWABLE DESIGN LOADS
SEE DESIGN LOAD TABLE ON SHEET 4

RECTANGULAR WINDOWS SHOWN. ANCHORING OF SHAPED WINDOWS IS THE SAME WITH REQUIRED ANCHOR SPACING ALONG THE FRAME RADIUS CIRCUMFERENCE BEING THE SAME AS SPECIFIED FOR A STRAIGHT FRAME.

LONG DIMENSION OF WINDOW MAY BE HORIZONTAL OR VERTICAL (HEIGHT & WIDTH MAY BE INTERCHANGED).

SASH NOTE:
WHEN WINDOW IS USED AS A DOOR SIDE LIGHT, THE SASH HEIGHT MAY BE INCREASED TO EQUAL THE DOOR PANEL BOTTOM RAIL HEIGHT.

MULTIPLE UNIT NOTES:

1. ALL WINDOWS ARE RESTRICTED BY THE DIMENSIONS SPECIFIED.
2. THE MAXIMUM ALLOWABLE PRESSURE FOR A COMBINED UNIT IS RESTRICTED BY THE LESSER OF THE INDIVIDUAL WINDOW ALLOWABLE PRESSURE (SEE LOAD TABLE ON SHEET 4) OR THE ALLOWABLE MULLION PRESSURE OF +65/–70 PSF
3. STACKING MAY BE HORIZONTAL OR VERTICAL.

CORNER CONSTRUCTION

JAMB CORNERS: VERTICAL JAMB ENDS ARE COPED AND BUTTED TO HORIZONTAL JAMBS WITH JOINT FULLY GLUED WITH WOOD GLUE AND DOWELED WITH (3) 1/2" DIA. x 3 5/16" LONG MERBAU WOOD DOWELS.

SASH CORNERS: HORIZONTAL SASH ENDS ARE COPED AND BUTTED TO VERTICAL SASH PROFILES WITH JOINT FULLY GLUED WITH WOOD GLUE AND DOWELED WITH (2) 1/2" DIA. x 3 7/16" AND (1) 5/8" DIA. x 3 1/4" MERBAU WOOD DOWELS.

GENERAL NOTES

1. THESE WINDOW SYSTEMS HAVE BEEN TESTED, ANALYZED AND APPROVED FOR DESIGN PRESSURES NOT TO EXCEED THOSE SHOWN IN THE "ALLOWABLE DESIGN LOADS" TABLE.
2. BUCKING, OPENINGS & BUCKING FASTENERS MUST BE PROPERLY DESIGNED & INSTALLED TO TRANSFER WIND LOADS TO THE STRUCTURE.
3. ALL HARDWARE & FASTENERS SHALL BE IN ACCORDANCE WITH THESE DRAWINGS & MAY NOT VARY UNLESS SPECIFICALLY MENTIONED ON THE DRAWINGS.
4. THE DETAILS & SPECIFICATIONS SHOWN HEREIN REPRESENT THE PRODUCTS TESTED & PROPOSED FOR WATER, AIR, IMPACT, CYCLIC & UNIFORM STATIC AIR PRESSURE TESTING IN CONFORMANCE WITH FLORIDA BUILDING CODE PROTOCOLS TAS 201, 202 & 203 FOR LARGE MISSILE IMPACT WINDOWS.
5. THESE WINDOW SYSTEMS HAVE BEEN DESIGNED IN ACCORDANCE WITH THE FLORIDA BUILDING CODE (F.B.C.).
6. IMPACT SHUTTERS ARE NOT REQUIRED WITH THESE WINDOWS.
7. ALL ANCHORS SHALL BE INSTALLED AS SPECIFIED ON THESE DRAWINGS. SPECIFIED EMBEDMENT TO BASE MATERIAL SHALL BE BEYOND WALL FINISH OR STUCCO.

APPROVED SHAPES

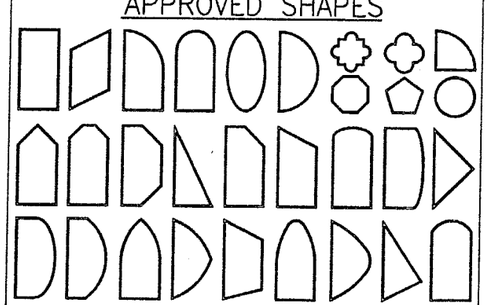

NOTES:
1. OTHER SHAPES MAY APPLY PROVIDING THEY ARE SIMILAR TO THOSE SHOWN & HAVE CORNER CONSTRUCTION AS DESCRIBED ON THIS SHEET.
2. ALL SHAPED UNITS MUST FIT INSCRIBED INTO THE ALLOWABLE RECTANGULAR UNITS & BE GOVERNED BY THE ALLOWABLE PRESSURE OF THE RESPECTIVE RECTANGULAR UNIT.

* FRAME ANCHOR REQUIREMENTS TABLE

OPENING TYPE (SUBSTRATE)	JAMB TO OPENING FASTENER TYPE	MINIMUM EMBEDMENT	MINIMUM EDGE DIST.
2X_ WOOD FRAME OR BUCK	NO. 12 SMS SCREW	1 1/4"	1"
CMU/CONCRETE	(1) 1/4" CONCRETE SCREWS	1 1/4"	2"

(1) CONCRETE SCREWS SHALL BE ELCO OR ITW RAMSET/RED HEAD TAPCONS, HILTI KWIK-CON II OR POWERS RAWL TAPPER (HARDENED STEEL OR S.S.).

*ANCHOR NOTE: FRAME MAY BE EITHER DIRECT MOUNTED TO THE OPENING, MOUNTED ONTO A CONTINUOUS WOOD SPACER, OR ANCHORED TO A MIN. 2x4 NO. 3 SOUTHERN PINE WOOD BUCK. WHEN ANCHORED TO A 2x4 BUCK, NO. 12 SCREWS SHALL BE USED. WHEN DIRECT MOUNTED OR MOUNTED WITH SPACER, 1/4" CONCRETE SCREW SHALL BE USED. SEE "ANCHOR REQUIREMENTS TABLE" FOR EMBED REQUIREMENTS.

Approved as complying with the Florida Building Code
Date 05/29/03
NOA# 03-0326.02
Miami Dade Product Control Division
By [illegible]

DRAWN BY: K.P.S.	CHECKED BY: W.W.S.
PLOT: 1=24	DATE: 11/18/02

NO.	REVISION DESCRIPTION	BY	DATE

DRAWING TITLE: LUXBAUM WINDOWS & DOORS WOODEN FIXED WINDOW SYSTEM

MANUFACTURER: LUXBAU, LLC
2400 CENTERPARK WEST DRIVE, SUITE 150
WEST PALM BEACH, FL 33409
561-684-1500

CONSULTANTS: W. W. SCHAEFER ENGINEERING & CONSULTING, P.A.
8895 N. MILITARY TRAIL; SUITE C-204
PALM BEACH GARDENS, FL 33410
PHONE: 561-775-4902 FAX: 561-775-4903

CERTIFICATION
MAR 19 2003
WARREN W. SCHAEFER, P.E.
P.E. NO. 44135

DRAWING NO. 1188 REV.

SHEET NO. 1 OF 4

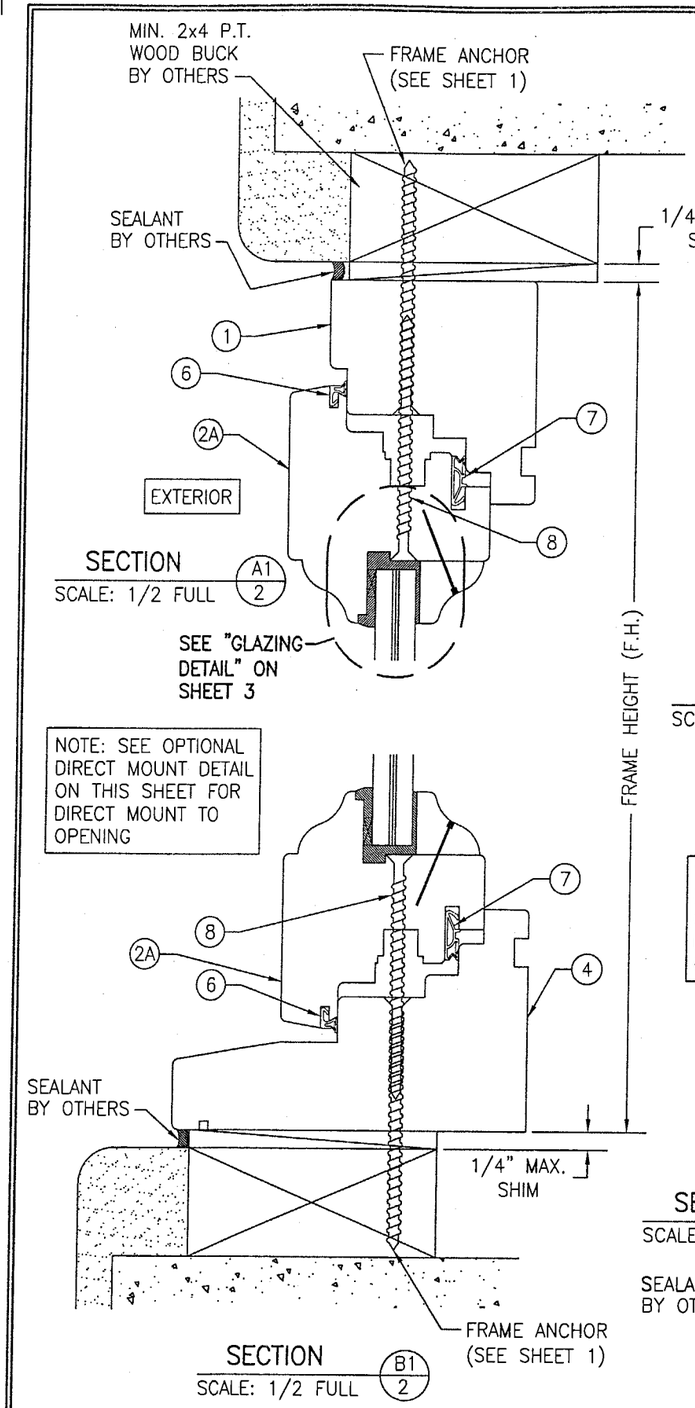

SECTION A1/2
SCALE: 1/2 FULL

SECTION B1/2
SCALE: 1/2 FULL

NOTE: BRICK MOLDS MAY BE PLACED WITH WINDOW & ARE OPTIONAL (NOT SHOWN)

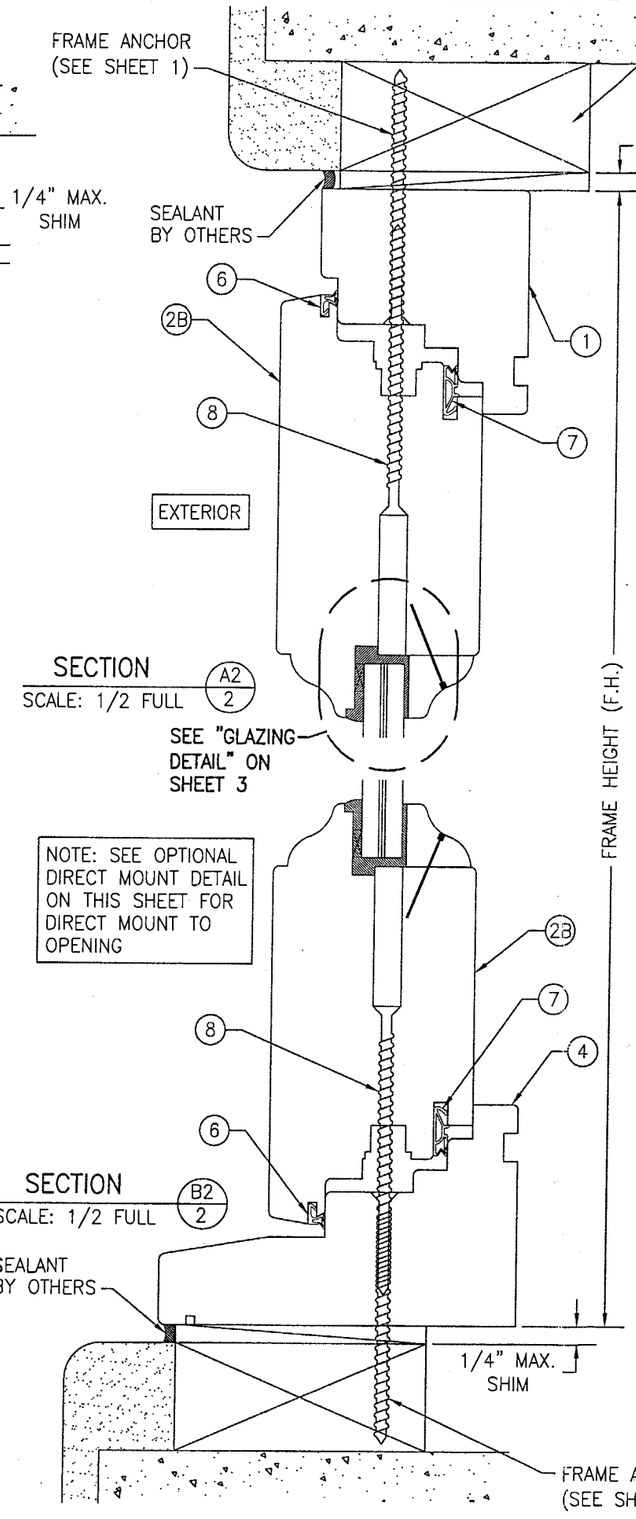

SECTION A2/2
SCALE: 1/2 FULL

SECTION B2/2
SCALE: 1/2 FULL

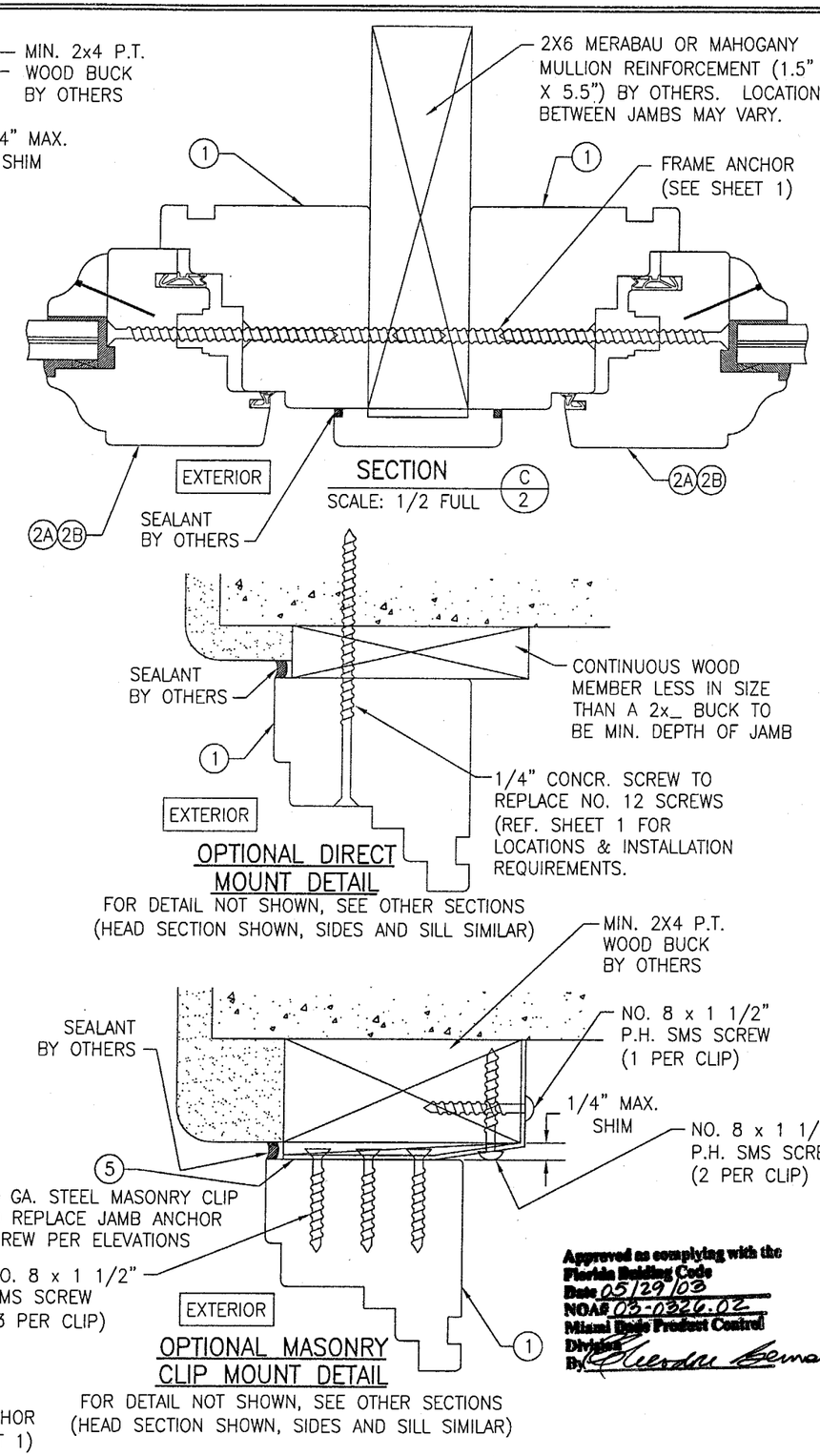

SECTION C/2
SCALE: 1/2 FULL

OPTIONAL DIRECT MOUNT DETAIL
FOR DETAIL NOT SHOWN, SEE OTHER SECTIONS (HEAD SECTION SHOWN, SIDES AND SILL SIMILAR)

OPTIONAL MASONRY CLIP MOUNT DETAIL
FOR DETAIL NOT SHOWN, SEE OTHER SECTIONS (HEAD SECTION SHOWN, SIDES AND SILL SIMILAR)

Approved as complying with the Florida Building Code
Date 05/29/03
NOA# 03-0326.02
Miami Dade Product Control Division
By

DRAWN BY: K.P.S.	CHECKED BY: W.W.S.
PLOT: 1=2	DATE: 11/18/02

NO.	REVISION DESCRIPTION	BY	DATE

DRAWING TITLE: LUXBAUM WINDOWS & DOORS WOODEN FIXED WINDOW SYSTEM

MANUFACTURER: LUXBAU, LLC
2400 CENTERPARK WEST DRIVE, SUITE 150
WEST PALM BEACH, FL 33409
561-684-1500

CONSULTANTS: W. W. SCHAEFER ENGINEERING & CONSULTING, P.A.
8895 N. MILITARY TRAIL; SUITE C-204
PALM BEACH GARDENS, FL 33410
PHONE: 561-775-4902 FAX: 561-775-4903

CERTIFICATION
MAR 19 2003
WARREN W. SCHAEFER, P.E.
P.E. NO. 44135

DRAWING NO. 1188 | REV.

SHEET NO. 2 OF 4

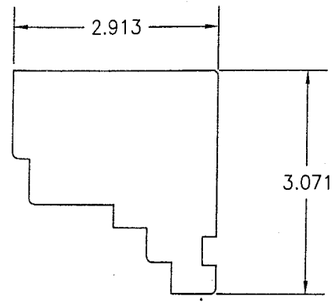

① HEAD & SIDE JAMB

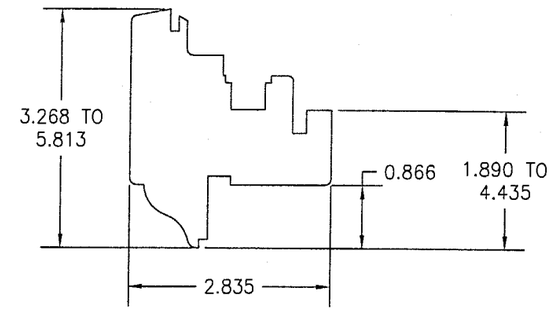

(2A)(2B) SMALL SASH & LARGE SASH

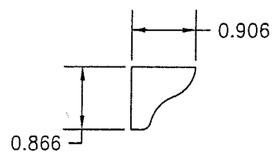

③ GLAZING BEAD

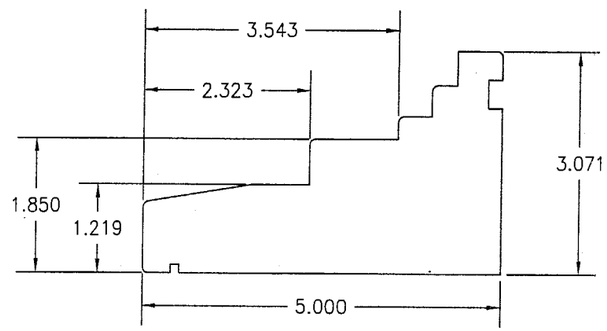

④ SILL JAMB

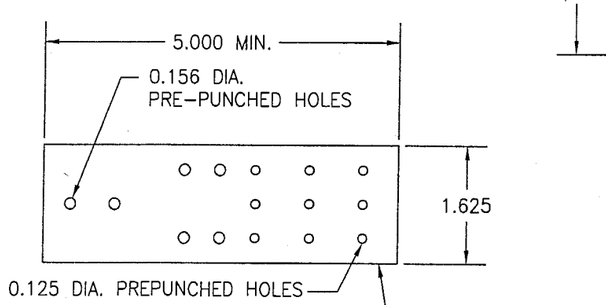

⑤ MASONRY CLIP

PRE-PUNCHED HOLES ARE ADDED FOR CLIPS LONGER THAN 5"

ITEM #	PART	ITEM DESCRIPTION	MANUFACTURER/NOTES
		PARTS	
1	7478	FRAME HEAD & SIDE JAMB	MIN. SELECT STRUCTURAL MERBAU OR MAHOGANY
2A	7283	SMALL SASH	MIN. SELECT STRUCTURAL MERBAU OR MAHOGANY
2B	72148	LARGE SASH	MIN. SELECT STRUCTURAL MERBAU OR MAHOGANY
3	2223	GLAZING BEAD	MIN. SELECT STRUCTURAL MERBAU OR MAHOGANY
4	78127	SILL JAMB	MIN. SELECT STRUCTURAL MERBAU OR MAHOGANY
5	–	1 5/8" WIDE x 0.05" THK. x MIN. 5" LONG MASONARY CLIP	ASTM A653 MIN. 33 KSI GALV. STEEL
		SEALS AND SEALANTS	
6	SV-33/ ACF-4527	COMPRESSION SEAL	DEVENTER/G-U
7	SV-12/ ACF-6950	COMPRESSION SEAL	DEVENTER/G-U
		MISCELLANEOUS FASTENERS	
8	–	#12 x 4" PFH SMS SCREW	4" FROM CORNERS & 12" O.C.
9	–	1/4" x 1 1/4" BRAD NAIL	2" FROM CORNERS & 4" O.C.

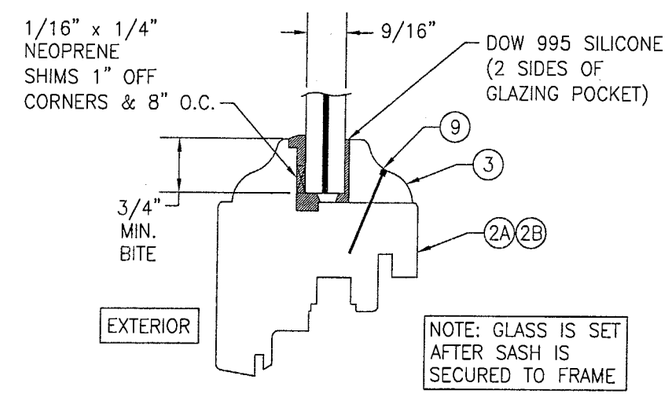

GLAZING DETAIL

OPTION 1: 9/16" SECURITY IMPACT GLASS SAF-GLASS LAMINATED GLASS (1/4" A.N./0.015 ADHESIVE/0.07 POLYCARBONITE/0.015 ADHESIVE/1/4" A.N.)

OPTION 2: 9/16" SECURITY IMPACT GLASS SAF-GLASS LAMINATED GLASS (1/4" HT.ST./0.015 ADHESIVE/0.07 POLYCARBONITE/0.015 ADHESIVE/1/4" HT.ST.)

OPTION 3: 9/16" SENTRY GLASS PLUS LAMINATED GLASS (1/4" A.N./0.09 SGP/1/4" A.N.)

Approved as complying with the Florida Building Code
Date 05/29/03
NOA# 03-0326.02
Miami Dade Product Control Division
By Sherdne Berman

DRAWN BY: K.P.S.	CHECKED BY: W.W.S.
PLOT: 1=2	DATE: 11/18/02

NO.	REVISION DESCRIPTION	BY	DATE

DRAWING TITLE
LUXBAUM WINDOWS & DOORS
WOODEN FIXED WINDOW SYSTEM

MANUFACTURER
LUXBAU, LLC
2400 CENTERPARK WEST DRIVE, SUITE 150
WEST PALM BEACH, FL 33409
561-684-1500

CONSULTANTS
W. W. SCHAEFER ENGINEERING & CONSULTING, P.A.
8895 N. MILITARY TRAIL; SUITE C-204
PALM BEACH GARDENS, FL 33410
PHONE: 561-775-4902 FAX: 561-775-4903

CERTIFICATION
MAR 19 2003
WARREN W. SCHAEFER, P.E.
P.E. NO. 44135

DRAWING NO. 1188
REV.

SHEET NO. 3 OF 4

ALLOWABLE WINDOW SIZE & DESIGN PRESSURE TABLE (SINGLE WINDOWS)

D.L.O.		FRAME SIZE				ALLOWABLE PRESSURE	
		3 1/4" SASH		5 3/4" SASH		GLASS OPTION 1 OR 3 9/16" LAMINATED ANNEALED (PSF)	GLASS OPTION 2 OR 4 9/16" LAMINATED HEAT STRENGTHENED (PSF)
HEIGHT (IN.)	WIDTH (IN.)	HEIGHT (IN.)	WIDTH (IN.)	HEIGHT (IN.)	WIDTH (IN.)		
59	53	68.0	62.0	73.0	67.0	75.0	75.0
	59		68.0		73.0	69.9	75.0
65	47	74.0	56.0	79.0	61.0	75.0	75.0
	53		62.0		67.0	71.3	75.0
	59		68.0		73.0	62.3	75.0
71	47	80.0	56.0	85.0	61.0	75.0	75.0
	53		62.0		67.0	64.8	75.0
	59		68.0		73.0	57.8	75.0
83	41	92.0	50.0	97.0	55.0	75.0	75.0
	47		56.0		61.0	65.1	75.0
	53		62.0		67.0	56.3	75.0
	59		68.0		73.0	48.9	75.0
95	35	104.0	44.0	109.0	49.0	75.0	75.0
	41		50.0		55.0	73.1	75.0
	47		56.0		61.0	58.9	75.0
	53		62.0		67.0	49.5	75.0
	59		68.0		73.0	43.0	75.0
107	35	116.0	44.0	121.0	49.0	75.0	75.0
	41		50.0		55.0	68.5	75.0
	47		56.0		61.0	54.6	75.0
119	35	128.0	44.0	133.0	49.0	75.0	75.0
	41		50.0		55.0	64.9	75.0
	47		56.0		61.0	51.2	75.0

NOTES:
1. ACTUAL FRAME SIZES = (D.L.O. + 9.5") AT 3.25" SASH UNITS & (D.L.O. + 14.25") AT 5.75" SASH UNITS.
2. ALL PRESSURES IN TABLE ARE FOR POSITIVE & NEGATIVE DIRECTIONS.
3. HEIGHT & WIDTH MAY BE INTERCHANGED SUCH THAT LONG DIMENSION IS HORIZONTAL OR VERTICAL.
4. ALL SIZES IN THIS TABLE ARE +/- 1/2".

Approved as complying with the Florida Building Code
Date 05/29/03
NOA# 03-0326.02
Miami Dade Product Control Division
By [signature]

DRAWN BY: K.P.S. | CHECKED BY: W.W.S.
PLOT: 1=2 | DATE: 11/18/02

NO.	REVISION DESCRIPTION	BY	DATE

DRAWING TITLE: LUXBAUM WINDOWS & DOORS WOODEN FIXED WINDOW SYSTEM

MANUFACTURER: LUXBAU, LLC
2400 CENTERPARK WEST DRIVE, SUITE 150
WEST PALM BEACH, FL 33409
561-684-1500

CONSULTANTS: W. W. SCHAEFER ENGINEERING & CONSULTING, P.A.
8895 N. MILITARY TRAIL; SUITE C-204
PALM BEACH GARDENS, FL 33410
PHONE: 561-775-4902 FAX: 561-775-4903

CERTIFICATION
MAR 19 2003
WARREN W. SCHAEFER, P.E.
P.E. NO. 44135

DRAWING NO. 1188 | REV.
SHEET NO. 4 OF 4