MIAMI-DADE

BUILDING CODE COMPLIANCE OFFICE (BCCO)
PRODUCT CONTROL DIVISION

MIAMI-DADE COUNTY, FLORIDA
METRO-DADE FLAGLER BUILDING
140 WEST FLAGLER STREET, SUITE 1603
MIAMI, FLORIDA 33130-1563
(305) 375-2901 FAX (305) 375-2908

NOTICE OF ACCEPTANCE (NOA)

Luxbau, LLC
2400 Centrepark West Dr. #150
West Palm Beach, FL 33409

SCOPE:
This NOA is being issued under the applicable rules and regulations governing the use of construction materials. The documentation submitted has been reviewed by Miami-Dade County Product Control Division and accepted by the Board of Rules and Appeals (BORA) to be used in Miami Dade County and other areas where allowed by the Authority Having Jurisdiction (AHJ).

This NOA shall not be valid after the expiration date stated below. The Miami-Dade County Product Control Division (In Miami Dade County) and/or the AHJ (in areas other than Miami Dade County) reserve the right to have this product or material tested for quality assurance purposes. If this product or material fails to perform in the accepted manner, the manufacturer will incur the expense of such testing and the AHJ may immediately revoke, modify, or suspend the use of such product or material within their jurisdiction. BORA reserves the right to revoke this acceptance, if it is determined by Miami-Dade County Product Control Division that this product or material fails to meet the requirements of the applicable building code.

This product is approved as described herein, and has been designed to comply with the High Velocity Hurricane Zone of the Florida Building Code.

DESCRIPTION: Luxbaum Windows & Doors Steel Clipped Mullion for Wood Windows & Doors

APPROVAL DOCUMENT: Drawing No. **1201,** titled "Luxbaum Windows & Doors Steel Clipped Mullion for Wood Windows & Doors", sheets 1 through 5 of 5, prepared by W.W. Schaefer Engineering & Consulting, P.A., dated 2/3/03, signed and sealed by Warren Schaefer, P.E., bearing the Miami-Dade County Product Control Approval stamp with the Notice of Acceptance number and approval date by the Miami-Dade County Product Control Division.

MISSILE IMPACT RATING: Large and Small Missile Impact

LABELING: Each unit shall bear a permanent label with the manufacturer's name or logo, city, state and following statement: "Miami-Dade County Product Control Approved", unless otherwise noted herein.

RENEWAL of this NOA shall be considered after a renewal application has been filed and there has been no change in the applicable building code negatively affecting the performance of this product.

TERMINATION of this NOA will occur after the expiration date or if there has been a revision or change in the materials, use, and/or manufacture of the product or process. Misuse of this NOA as an endorsement of any product, for sales, advertising or any other purposes shall automatically terminate this NOA. Failure to comply with any section of this NOA shall be cause for termination and removal of NOA.

ADVERTISEMENT: The NOA number preceded by the words Miami-Dade County, Florida, and followed by the expiration date may be displayed in advertising literature. If any portion of the NOA is displayed, then it shall be done in its entirety.

INSPECTION: A copy of this entire NOA shall be provided to the user by the manufacturer or its distributors and shall be available for inspection at the job site at the request of the Building Official.
This NOA consists of this page 1 as well as approval document mentioned above.
The submitted documentation was reviewed by **Theodore Berman, P.E.**

5/7/03

PRODUCT CONTROL ACCEPTED

NOA No 03-0326.04
Expiration Date: May 29, 2008
Approval Date: May 29, 2003

Luxbau, LLC

NOTICE OF ACCEPTANCE: EVIDENCE SUBMITTED

(For File ONLY. Not part of NOA)

A. DRAWINGS

1. Manufacturer's die drawings and sections.
2. Drawing No. **1201,** titled "Luxbaum Windows & Doors Steel Clipped Mullion for Wood Windows & Doors", sheets 1 through 5 of 5, prepared by W.W. Schaefer Engineering & Consulting, P.A., dated 2/3/03, signed and sealed by Warren Schaefer, P.E.

B. TESTS

1. Test reports on 1) Air Infiltration Test, per FBC, TAS 202-94
   2) Uniform Static Air Pressure Test, Loading per FBC,TAS 202-94
   3) Water Resistance Test, per FBC, TAS 202-94
   4) Large Missile Impact Test per FBC, TAS 201-94
   5) Cyclic Wind Pressure Loading per FBC, TAS 203-94

   along with marked-up drawings and installation diagram of a steel clipped mullion, prepared by Hurricane Test Laboratory, Inc., Test Report No. HTL 0271-0717.02 dated 7/24/02, signed and sealed by Vinu Abraham, P.E.

C. CALCULATIONS

1. Anchor Calculations and structural analysis, prepared by W.W. Schaefer Engineering & Consulting, P.A., dated 2/4/03, signed and sealed by Warren Schaefer, P.E.

D. MATERIAL CERTIFICATIONS

1. None

E. STATEMENTS

1. Statement letter of conformance, dated 2/19/02, signed and sealed by Warren Schaefer, P.E.
3. Laboratory compliance letter for Test Report no. HTL 0271-0717.02, issued by Hurricane Test Laboratory, Inc., dated 2/28/03, signed and sealed by Vinu Abraham, P.E.

F. OTHER

1. Letter from the consultant stating that the product is in compliance with the Florida Building Code (FBC).

Theodore Berman, P.E.
Deputy Director, Product Control Division
NOA No 03-0326.04
Expiration Date: May 29, 2008
Approval Date: May 29, 2003

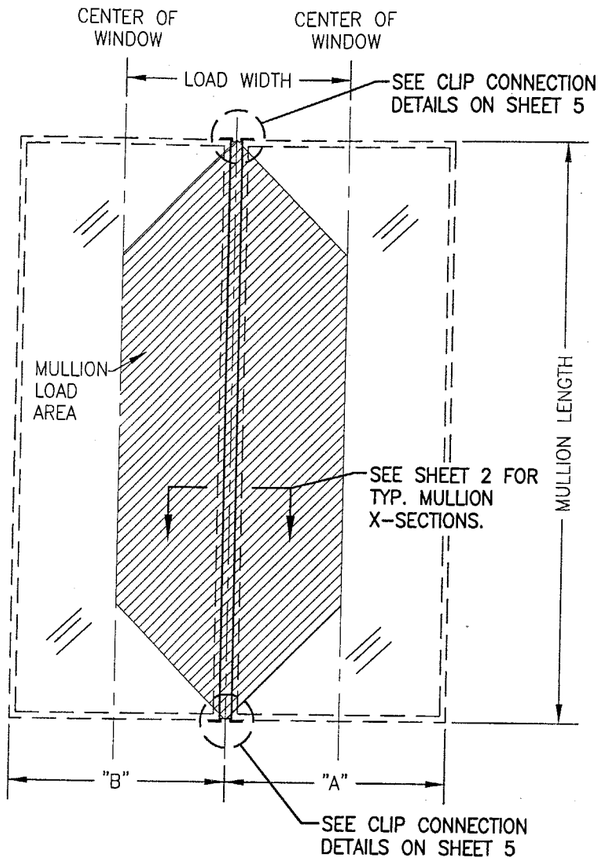

FIXED WINDOW TO FIXED WINDOW

LOAD WIDTH = (A + B)/2

NOTE: "FIXED WINDOW" MAY BE A SASH GLAZED FIXED OR A DIRECT GLAZED FIXED WINDOW UNDER SEPERATE APPROVAL.

NOTE: MULLION MAY BE HORIZONTAL OR VERTICAL

NOTE: WHEN WINDOW WIDTH IS GREATER THAN THE MULLION LENGTH, "A" AND/OR "B" SHALL BE EQUAL TO 1/2 THE MULLION LENGTH

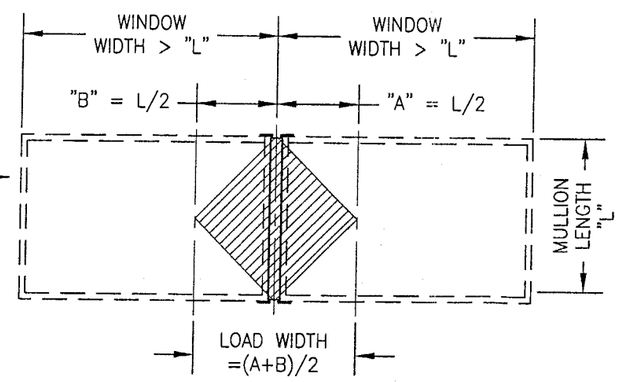

FIXED WINDOW TO FIXED WINDOW TABLE

LENGTH (IN.)	LOAD WIDTH (IN.) A+B/2	ALLOWABLE PRESSURES (PSF) 4X2X3/16 TUBE CONN. "A"	4X2X3/16 TUBE CONN. "B", "C" & "D"	4X2X1/4 TUBE CONN. "A"	4X2X1/4 TUBE CONN. "B", "C" & "D"	5X2X1/4 TUBE CONN. "A"	5X2X1/4 TUBE CONN. "B", "C" & "D"
78 OR LESS	74 OR LESS	85.0	85.0	85.0	85.0	85.0	85.0
84	66 OR LESS	85.0	85.0	85.0	85.0	85.0	85.0
	74	84.1	85.0	84.1	85.0	84.1	85.0
90	54 OR LESS	85.0	85.0	85.0	85.0	85.0	85.0
	60	81.3	85.0	81.3	85.0	81.3	85.0
	66	77.8	85.0	77.8	85.0	77.8	85.0
	74	74.6	85.0	74.6	85.0	74.6	85.0
96	42 OR LESS	85.0	85.0	85.0	85.0	85.0	85.0
	48	84.7	85.0	84.7	85.0	84.7	85.0
	54	78.5	85.0	78.5	85.0	78.5	85.0
	60	73.9	85.0	73.9	85.0	73.9	85.0
	66	70.4	85.0	70.4	85.0	70.4	85.0
	74	67.0	85.0	67.0	85.0	67.0	85.0
108	36 OR LESS	85.0	85.0	85.0	85.0	85.0	85.0
	42	80.1	85.0	80.1	85.0	80.1	85.0
	48	72.6	85.0	72.6	85.0	72.6	85.0
	54	66.9	85.0	66.9	85.0	66.9	85.0
	60	62.5	81.0	62.5	81.0	62.5	81.0
	66	59.1	76.6	59.1	76.6	59.1	76.6
	74	55.7	72.2	55.7	72.2	55.7	72.2

ALL TUBES SHALL BE A46 STEEL

FIXED WINDOW TO FIXED WINDOW TABLE

LENGTH (IN.)	LOAD WIDTH (IN.) A+B/2	ALLOWABLE PRESSURES (PSF) 4X2X3/16 TUBE CONN. "A"	4X2X3/16 TUBE CONN. "B", "C" & "D"	4X2X1/4 TUBE CONN. "A"	4X2X1/4 TUBE CONN. "B", "C" & "D"	5X2X1/4 TUBE CONN. "A"	5X2X1/4 TUBE CONN. "B", "C" & "D"
120	30 OR LESS	85.0	85.0	85.0	85.0	85.0	85.0
	36	79.7	85.0	79.7	85.0	79.7	85.0
	42	70.4	85.0	70.4	85.0	70.4	85.0
	48	63.5	82.3	63.5	82.3	63.5	82.3
	54	58.3	73.9	58.3	75.5	58.3	75.5
	60	54.2	66.5	54.2	70.2	54.2	70.2
	66	51.0	60.5	51.0	66.1	51.0	66.1
	74	47.6	53.9	47.6	61.8	47.6	61.8
132	24 OR LESS	85.0	85.0	85.0	85.0	85.0	85.0
	30	83.4	85.0	83.4	85.0	83.4	85.0
	36	71.3	83.3	71.3	85.0	71.3	85.0
	42	62.8	71.4	62.8	81.4	62.8	81.4
	48	56.4	62.5	56.4	73.2	56.4	73.2
	54	51.6	55.5	51.6	66.9	51.6	66.9
	60	47.8	50.0	47.8	60.6	47.8	62.0
	66	44.8	45.4	44.8	55.0	44.8	58.0
	74	40.5	40.5	41.6	49.1	41.6	54.0
144	24 OR LESS	85.0	85.0	85.0	85.0	85.0	85.0
	30	75.6	77.0	75.6	85.0	75.6	85.0
	36	64.1	64.1	64.5	77.7	64.5	83.6
	42	55.0	55.0	56.6	66.6	56.6	73.4
	48	48.1	48.1	50.8	58.3	50.8	65.8
	54	42.8	42.8	46.3	51.8	46.3	60.0
	60	38.5	38.5	42.8	46.6	42.8	55.4
	66	35.0	35.0	39.9	42.4	39.9	51.8
	74	31.2	31.2	37.0	37.8	37.0	47.9

CONN "A" = CONNECTION METHOD "A". SEE SHEET 5 FOR DETAIL.
CONN "B" = CONNECTION METHOD "B". SEE SHEET 5 FOR DETAIL.
CONN "C" = CONNECTION METHOD "C". SEE SHEET 5 FOR DETAIL.
CONN "D" = CONNECTION METHOD "D". SEE SHEET 5 FOR DETAIL.
NOTE: TUBE TO TUBE CONNECTION, AS DETAILED ON SHEET 5, IS ACCEPTABLE FOR ALL CONN. "A", "B", "C" & "D" LOADS.

NOTE: INDIVIDUAL UNIT SIZES & SHUTTER REQUIREMENTS ARE LIMITED BY THEIR OWN INDIVIDUAL "NOTICE OF ACCEPTANCE"

GENERAL NOTES (ALL DRAWING SHEETS):

1. DOORS & WINDOWS ARE APPROVED UNDER SEPERATE N.O.A. WITH WOOD FILLER MULLION AS AN UN-CLIPPED MULLION. SEE THE PRODUCTS SPECIFIC N.O.A. FOR USE OF THESE MULLIONS WHEN THEY APPLY.
2. THESE MULLION SYSTEMS HAVE BEEN TESTED, ANALYZED AND APPROVED FOR DESIGN PRESSURES NOT TO EXCEED THOSE SHOWN ON THESE DRAWINGS.
3. BLOCK AND FRAME OPENINGS, INCLUDING BUCKS (IF USED AS SUPPORT), MUST BE DESIGNED & CONSTRUCTED TO WITHSTAND WIND LOADS TRANSFERRED BY THE MULLIONS END REACTIONS & SUPPORTED WINDOWS/DOORS.
4. ALL MATERIALS & FASTENERS SHALL BE IN ACCORDANCE WITH THESE DRAWINGS & MAY NOT VARY UNLESS SPECIFICALLY MENTIONED ON THE DRAWINGS.
5. THESE MULLION SYSTEMS HAVE BEEN DESIGNED IN ACCORDANCE WITH THE FLORIDA BUILDING CODE (FBC).
6. THIS MULLION PRODUCT HAS BEEN TESTED IN ACCORDANCE WITH FLORIDA BUILDING CODE PROTOCOLS TAS-201, TAS-202 & TAS-203 FOR LARGE MISSILE IMPACT, STRUCTURAL & CYCLIC TESTING.
7. ALL PRODUCTS TO BE USED WITH THESE MULLIONS MUST BE WOOD FRAMED PRODUCTS SUPPLIED BY LANDFALL GROUP AND MUST HOLD A DADE COUNTY IMPACT OR NON-IMPACT NOTICE OF ACCEPTANCE (N.O.A.) AND/OR FLORIDA STATE APPROVAL.
8. ALLOWABLE PRESSURE ON THE MULLED UNIT SHALL BE CONTROLLED BY THE LESSER ALLOWABLE PRESSURE OF THE MULLION OR THE INDIVIDUAL DOOR/WINDOW UNITS.
9. FOR WINDOW OR DOOR FRAME TO OPENING ATTACHMENT, SEE THE RESPECTIVE PRODUCT APPROVAL DRAWINGS FOR THE WINDOW/DOOR.
10. MULLION LENGTHS ARE RESTRICTED BY THOSE SHOWN IN THE TABLES.
11. THE LOADS IN THESE TABLES CONSIDER WORSE CASE OF MULLION STRESS, DEFLECTION AND END REACTION.
12. ANY CONDITIONS NOT COVERED IN THIS APPROVAL SHALL BE SUBJECT TO SEPERATE ENGINEERING REVIEW.
13. ALL TUBES SHALL BE A46 STEEL. ALL CONNECTION ANGLES & PLATES SHALL BE A36 MIN. 12 GAGE GALVANIZED STEEL.
14. ALL EMBEDMENTS SPECIFIED ARE TO BE BEYOND WALL FINISH.

Approved as complying with the Florida Building Code
Date 05/29/03
NOA# 03-0326.04
Miami Dade Product Control Division
By Florentino Berman

DRAWN BY: K.P.S.	CHECKED BY: W.W.S.
PLOT: 1=24	DATE: 02/05/03

NO.	REVISION DESCRIPTION	BY	DATE

DRAWING TITLE
LUXBAUM WINDOWS & DOORS
STEEL CLIPPED MULLION FOR WOODEN DOORS & WINDOWS

MANUFACTURER
LUXBAU, LLC
2400 CENTERPARK WEST DRIVE, SUITE 150
WEST PALM BEACH, FL 33409
561-684-1500

CONSULTANTS
W. W. SCHAEFER ENGINEERING & CONSULTING, P.A.
8895 N. MILITARY TRAIL; SUITE C-204
PALM BEACH GARDENS, FL 33410
PHONE: 561-775-4902 FAX: 561-775-4903

CERTIFICATION
MAR 19 2003
WARREN W. SCHAEFER, P.E.
P.E. NO. 44135

DRAWING NO. 1201
REV.

SHEET NO. 1 OF 5

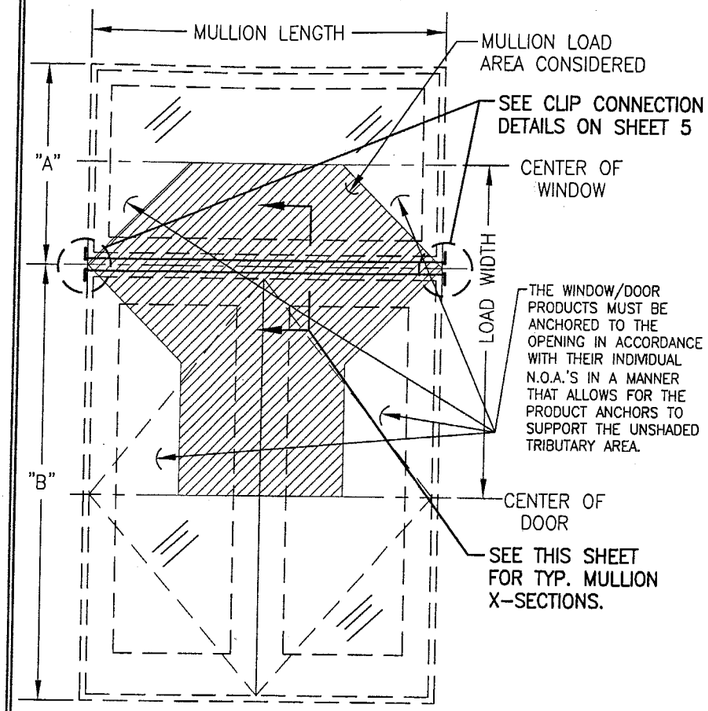

DOUBLE DOOR OR CASEMENT WITH TRANSOM

LOAD WIDTH = (A + B)/2

NOTE: "TRANSOM" MAY BE A SASH GLAZED FIXED WINDOW, DIRECT GLAZED FIXED WINDOW OR A FIXED DOOR PANEL UNDER SEPERATE APPROVAL.

DOUBLE DOOR OR CASEMENT WITH TRANSOM

LENGTH (IN.)	LOAD WIDTH (IN.) A+B / 2	ALLOWABLE PRESSURES (PSF) 4X2X3/16 TUBE CONN. "A"	CONN. "B", "C" & "D"
54 OR LESS	90 OR LESS	85.0	85.0
	96	80.6	85.0
60	78 OR LESS	85.0	85.0
	84	82.9	85.0
	90	77.4	85.0
	96	72.6	85.0
66	72 OR LESS	85.0	85.0
	78	81.2	85.0
	84	75.4	85.0
	90	70.4	85.0
	96	66.0	85.0
72	66 OR LESS	85.0	85.0
	72	80.6	85.0
	78	74.4	85.0
	84	69.1	85.0
	90	64.5	83.6
	96	60.5	78.4
78	60 OR LESS	85.0	85.0
	66	81.2	85.0
	72	74.4	85.0
	78	68.7	85.0
	84	63.8	82.7
	90	59.5	77.2
	96	55.8	72.4
84	54 OR LESS	85.0	85.0
	60	82.9	85.0
	66	75.4	85.0
	72	69.1	85.0
	78	63.8	82.7
	84	59.2	76.8
	90	55.3	71.7
	96	51.8	67.2
87	54 OR LESS	85.0	85.0
	60	80.1	85.0
	66	72.8	85.0
	72	66.7	85.0
	78	61.6	79.8
	84	57.2	74.1
	90	53.4	69.2
	96	50.0	64.9

ALL TUBES SHALL BE A46 STEEL

CONN "A" = CONNECTION METHOD "A". SEE SHEET 5 FOR DETAIL.
CONN "B" = CONNECTION METHOD "B". SEE SHEET 5 FOR DETAIL.
CONN "C" = CONNECTION METHOD "C". SEE SHEET 5 FOR DETAIL.
CONN "D" = CONNECTION METHOD "D". SEE SHEET 5 FOR DETAIL.
NOTE: TUBE TO TUBE CONNECTION, AS DETAILED ON SHEET 5, IS ACCEPTABLE FOR ALL CONN. "A", "B", "C" & "D" LOADS.

NOTE: INDIVIDUAL UNIT SIZES & SHUTTER REQUIREMENTS ARE LIMITED BY THEIR OWN INDIVIDUAL "NOTICE OF ACCEPTANCE"

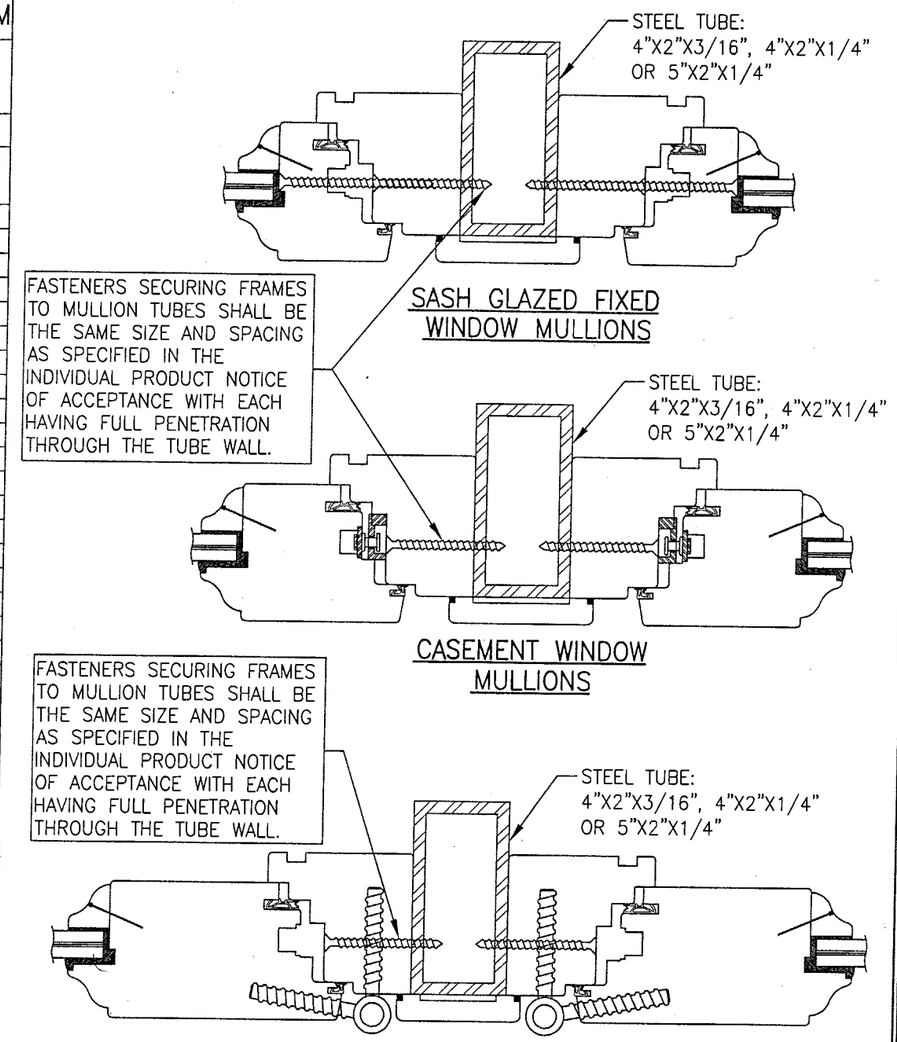

TYPICAL MULLION CONDITIONS

NOTE: PRODUCTS CAN BE INTERMIXED & ARE NOT LIMITED TO THOSE SHOWN. PRODUCTS USED WITH THE MULLIONS MUST BE WOOD WINDOW/DOOR PRODUCTS SUPPLIED BY THE LANDFALL GROUP & MUST HOLD A MIAMI-DADE COUNTY "NOTICE OF ACCEPTANCE" OR FLORIDA STATE APPROVAL.

Approved as complying with the Florida Building Code
Date 05/29/03
NOA# 03-0326.04
Miami Dade Product Control Division
By Gerardo Barrera

NO.	REVISION DESCRIPTION	BY	DATE

DRAWN BY: K.P.S. | CHECKED BY: W.W.S.
PLOT: 1=24 | DATE: 02/05/03

DRAWING TITLE: LUXBAUM WINDOWS & DOORS STEEL CLIPPED MULLION FOR WOODEN DOORS & WINDOWS

MANUFACTURER: LUXBAU, LLC
2400 CENTERPARK WEST DRIVE, SUITE 150
WEST PALM BEACH, FL 33409
561-684-1500

CONSULTANTS: W. W. SCHAEFER ENGINEERING & CONSULTING, P.A.
8895 N. MILITARY TRAIL; SUITE C-204
PALM BEACH GARDENS, FL 33410
PHONE: 561-775-4902 FAX: 561-775-4903

CERTIFICATION: MAR 19 2003
WARREN W. SCHAEFER, P.E.
P.E. NO. 44135

DRAWING NO. 1201 | REV.

SHEET NO. 2 OF 5

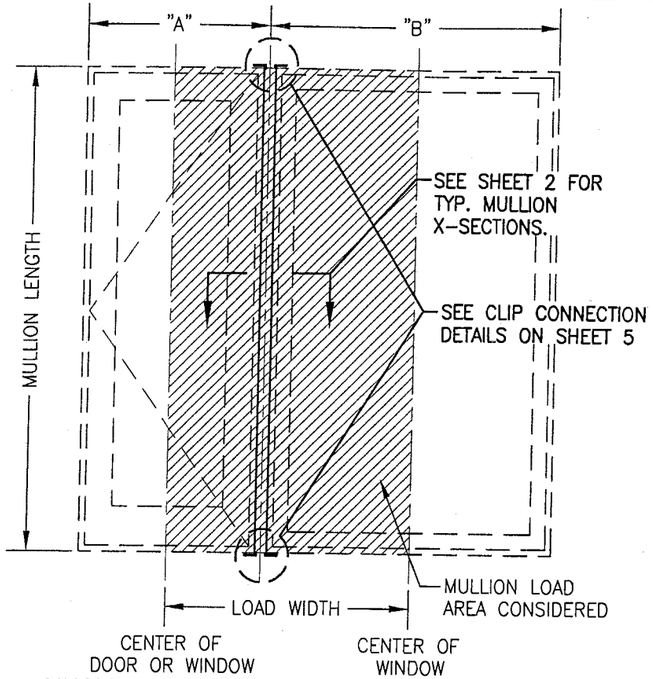

SINGLE DOOR OR OPERABLE WINDOW WITH SIDELIGHT, DOOR TO DOOR OR OPERABLE WINDOW TO OPERABLE WINDOW

LOAD WIDTH = (A + B)/2

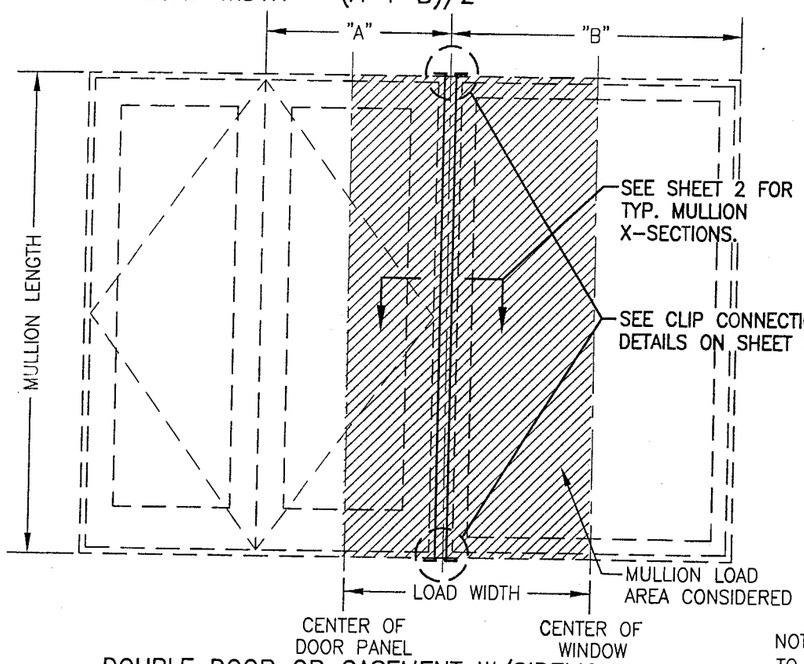

DOUBLE DOOR OR CASEMENT W/SIDELIGHT OR DOUBLE DOOR/CASEMENT TO DOOR/CASEMENT

LOAD WIDTH = (A + B)/2

NOTE: IF A DOUBLE UNIT IS MULLED TO A DOUBLE UNIT, DIMENSION "B" WILL BE THE WIDTH OF THE DOOR PANEL AS WITH DIMENSION "A".

NOTE: "SIDELIGHT" MAY BE A SASH GLAZED FIXED WINDOW, A DIRECT GLAZED FIXED WINDOW, OR A FIXED DOOR PANEL UNDER SEPERATE APPROVAL.

DOOR OR CASEMENT WITH SIDELIGHT			
LENGTH (IN.)	LOAD WIDTH (IN.) A+B / 2	ALLOWABLE PRESSURES (PSF) 4X2X3/16 TUBE	
		CONN. "A"	CONN. "B", "C" & "D"
54 OR LESS	60 OR LESS	85.0	85.0
60	54 OR LESS	85.0	85.0
	60	81.3	85.0
66	48 OR LESS	85.0	85.0
	54	82.1	85.0
	60	73.9	85.0
72	42 OR LESS	85.0	85.0
	48	84.7	85.0
	54	75.3	85.0
	60	67.7	85.0
78	42 OR LESS	85.0	85.0
	48	78.1	85.0
	54	69.5	85.0
	60	62.5	81.0
84	36 OR LESS	85.0	85.0
	42	82.9	85.0
	48	72.6	85.0
	54	64.5	83.6
	60	58.1	75.3
90	36 OR LESS	85.0	85.0
	42	77.4	85.0
	48	67.7	85.0
	54	60.2	78.0
	60	54.2	70.2

DOOR OR CASEMENT WITH SIDELIGHT			
LENGTH (IN.)	LOAD WIDTH (IN.) A+B / 2	ALLOWABLE PRESSURES (PSF) 4X2X3/16 TUBE	
		CONN. "A"	CONN. "B", "C" & "D"
96	30 OR LESS	85.0	85.0
	36	84.7	85.0
	42	72.6	85.0
	48	63.5	82.3
	54	56.4	73.2
	60	50.8	65.8
102	30 OR LESS	85.0	85.0
	36	79.7	85.0
	42	68.3	85.0
	48	59.8	77.5
	54	53.1	68.9
	60	47.8	62.0
108	30 OR LESS	85.0	85.0
	36	75.3	85.0
	42	64.5	83.6
	48	56.4	73.2
	54	50.2	65.0
	60	45.2	58.5
123	24 OR LESS	85.0	85.0
	30	79.3	85.0
	36	66.1	85.0
	42	56.6	73.4
	48	49.6	64.2
	54	44.0	57.1
	60	39.6	51.4

ALL TUBES SHALL BE A46 STEEL

CONN "A" = CONNECTION METHOD "A". SEE SHEET 5 FOR DETAIL.
CONN "B" = CONNECTION METHOD "B". SEE SHEET 5 FOR DETAIL.
CONN "C" = CONNECTION METHOD "C". SEE SHEET 5 FOR DETAIL.
CONN "D" = CONNECTION METHOD "D". SEE SHEET 5 FOR DETAIL.

NOTE: TUBE TO TUBE CONNECTION, AS DETAILED ON SHEET 5, IS ACCEPTABLE FOR ALL CONN. "A", "B", "C" & "D" LOADS.

NOTE: INDIVIDUAL UNIT SIZES & SHUTTER REQUIREMENTS ARE LIMITED BY THEIR OWN INDIVIDUAL "NOTICE OF ACCEPTANCE"

Approved as complying with the Florida Building Code
Date 05/29/03
NOA# 03-0326.04
Miami Dade Product Control Division
By [signature]

DRAWN BY: K.P.S.	CHECKED BY: W.W.S.
PLOT: 1=24	DATE: 02/05/03

NO.	REVISION DESCRIPTION	BY	DATE

DRAWING TITLE
LUXBAUM WINDOWS & DOORS
STEEL CLIPPED MULLION FOR WOODEN DOORS & WINDOWS

MANUFACTURER
LUXBAU, LLC
2400 CENTERPARK WEST DRIVE, SUITE 150
WEST PALM BEACH, FL 33409
561-684-1500

CONSULTANTS
W. W. SCHAEFER ENGINEERING & CONSULTING, P.A.
8895 N. MILITARY TRAIL; SUITE C-204
PALM BEACH GARDENS, FL 33410
PHONE: 561-775-4902 FAX: 561-775-4903

CERTIFICATION
MAR 19 2003
WARREN W. SCHAEFER, P.E.
P.E. NO. 44135

DRAWING NO. 1201
REV.

SHEET NO. 3 OF 5

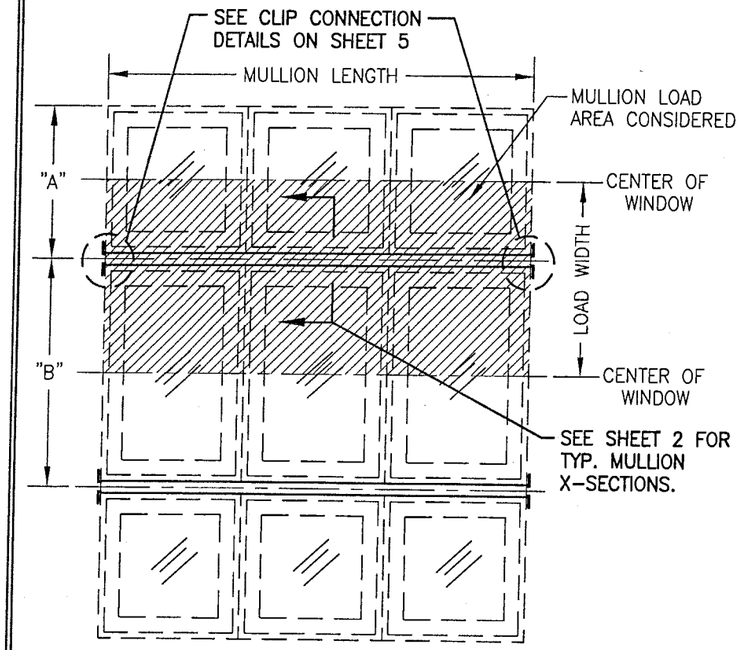

MULTIPLE WINDOWS (HORIZONTAL MULLION)

LOAD WIDTH = (A + B)/2

MULLIONS MAY BE HORIZONTAL OR VERTICAL

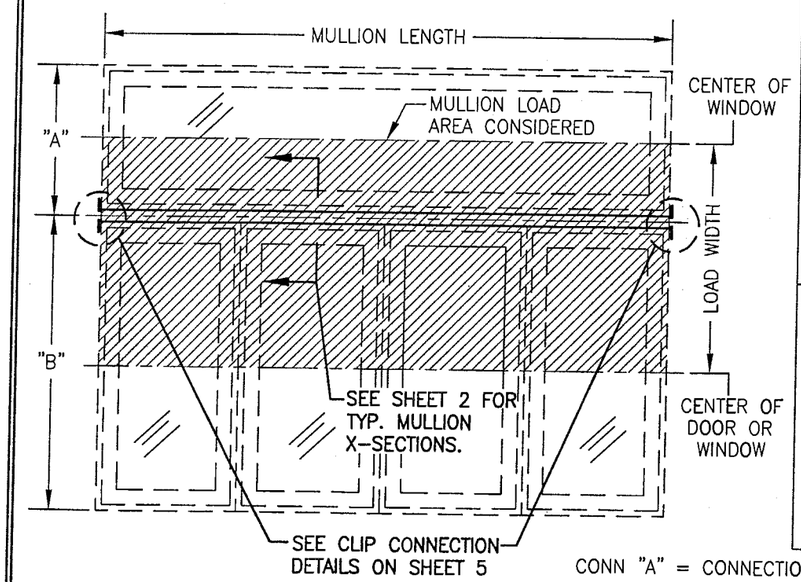

MULTIPLE WINDOWS/DOORS WITH TRANSOM

LOAD WIDTH = (A + B)/2

TRANSOM MAY BE SINGLE OR MULTIPLE WINDOWS

(SINGLE DOOR/WINDOW WITH TRANSOM ALSO APPLIES)

MULTIPLE WINDOWS/DOORS

LENGTH (IN.)	LOAD WIDTH (IN.) A+B / 2	ALLOWABLE PRESSURES (PSF) 4X2X3/16 TUBE CONN. "A"	CONN. "B", "C" & "D"
48 OR LESS	66 OR LESS	85.0	85.0
	72	84.7	85.0
54	60 OR LESS	85.0	85.0
	66	82.1	85.0
	72	75.3	85.0
60	54 OR LESS	85.0	85.0
	60	81.3	85.0
	66	73.9	85.0
	72	67.7	85.0
	78	62.5	81.0
	84	58.1	75.3
66	48 OR LESS	85.0	85.0
	54	82.1	85.0
	60	73.9	85.0
	66	67.2	85.0
	72	61.6	79.8
	78	56.8	73.7
	84	52.8	68.4
72	42 OR LESS	85.0	85.0
	48	84.7	85.0
	54	75.3	85.0
	60	67.7	85.0
	66	61.6	79.8
	72	56.4	73.2
	78	52.1	67.5
	84	48.4	62.7
	90	45.2	58.5
	96	42.3	54.9
78	42 OR LESS	85.0	85.0
	48	78.1	85.0
	54	69.5	85.0
	60	62.5	81.0
	66	56.8	73.7
	72	52.1	67.5
	78	48.1	62.3
	84	44.7	57.9
	90	41.7	54.0
	96	39.1	50.7
84	36 OR LESS	85.0	85.0
	42	82.9	85.0
	48	72.6	85.0
	54	64.5	83.6
	60	58.1	75.3
	66	52.8	68.4
	72	48.4	62.7
	78	44.7	57.9
	84	41.5	53.8
	90	38.7	50.2
	96	36.3	47.0

MULTIPLE WINDOWS/DOORS

LENGTH (IN.)	LOAD WIDTH (IN.) A+B / 2	ALLOWABLE PRESSURES (PSF) 4X2X3/16 TUBE CONN. "A"	CONN. "B", "C" & "D"
90	36 OR LESS	85.0	85.0
	42	77.4	85.0
	48	67.7	85.0
	54	60.2	78.0
	60	54.2	70.2
	66	49.3	63.9
	72	45.2	58.5
	78	41.7	54.0
	84	38.7	50.2
	90	36.1	46.8
	96	33.9	43.9
96	30 OR LESS	85.0	85.0
	36	84.7	85.0
	42	72.6	85.0
	48	63.5	82.3
	54	56.4	73.2
	60	50.8	65.8
	66	46.2	59.9
	72	42.3	54.9
	78	39.1	50.7
	84	36.3	47.0
	90	33.9	43.9
	96	31.7	41.2
108	30 OR LESS	85.0	85.0
	36	75.3	85.0
	42	64.5	83.6
	48	56.4	73.2
	54	50.2	65.0
	60	45.2	58.5
	66	41.0	53.2
	72	37.6	48.8
	78	34.7	45.0
	84	32.3	41.8
	90	30.1	39.0
	96	–	36.6
120	24 OR LESS	85.0	85.0
	30	81.3	85.0
	36	67.7	85.0
	42	58.1	75.3
	48	50.8	65.8
	54	45.2	58.5
	60	40.6	52.7
	66	36.9	47.9
	72	33.9	43.9
	84	–	37.6
	96	–	32.9
132	30 OR LESS	73.9	85.0
	36	61.6	79.8
	42	52.8	68.4
	48	46.2	59.9
	54	41.0	53.2
	60	36.9	47.9
	66	33.6	43.5
	72	30.8	39.9
	84	–	34.2
	96	–	29.9

MULTIPLE WINDOWS/DOORS

LENGTH (IN.)	LOAD WIDTH (IN.) A+B / 2	ALLOWABLE PRESSURES (PSF) 4X2X3/16 TUBE CONN. "A"	CONN. "B", "C" & "D"
144	30 OR LESS	67.7	77.0
	36	56.4	64.1
	42	48.4	55.0
	48	42.3	48.1
	54	37.6	42.8
	60	33.9	38.5
	72	–	32.1
156	30 OR LESS	60.5	60.5
	36	50.5	50.5
	42	43.2	43.2
	48	37.8	37.8
	54	33.6	33.6
	60	30.3	30.3
4X2X1/4 TUBE			
144	30 OR LESS	67.7	85.0
	36	56.4	73.2
	42	48.4	62.7
	48	42.3	54.9
	54	37.6	48.8
	60	33.9	43.9
	72	–	36.6
	84	–	31.4
156	30 OR LESS	62.5	73.4
	36	52.1	61.1
	42	44.7	52.4
	48	39.1	45.9
	54	34.7	40.8
	60	31.3	36.7
	66	–	33.4
	72	–	30.6
5X2X1/4 TUBE			
144	30 OR LESS	67.7	85.0
	36	56.4	73.2
	42	48.4	62.7
	48	42.3	54.9
	54	37.6	48.8
	60	33.9	43.9
	72	–	36.6
	84	–	31.4
156	30 OR LESS	62.5	81.0
	36	52.1	67.5
	42	44.7	57.9
	48	39.1	50.7
	54	34.7	45.0
	60	31.3	40.5
	66	–	36.8
	72	–	33.8
	78	–	31.2

NOTE: LOAD VALUES FOR 4X2X1/4 & 5X2X1/4 MULLIONS LESS THAN 144" IN LENGTH ARE THE SAME AS SPECIFIED FOR THE 4X2X3/16 MULLION. (SEE 4X2X3/16 TUBE LOAD TABLE)

ALL TUBES SHALL BE A46 STEEL

NOTE: INDIVIDUAL UNIT SIZES & SHUTTER REQUIREMENTS ARE LIMITED BY THEIR OWN INDIVIDUAL "NOTICE OF ACCEPTANCE"

CONN "A" = CONNECTION METHOD "A". SEE SHEET 5 FOR DETAIL.
CONN "B" = CONNECTION METHOD "B". SEE SHEET 5 FOR DETAIL.
CONN "C" = CONNECTION METHOD "C". SEE SHEET 5 FOR DETAIL.
CONN "D" = CONNECTION METHOD "D". SEE SHEET 5 FOR DETAIL.
NOTE: TUBE TO TUBE CONNECTION, AS DETAILED ON SHEET 5, IS ACCEPTABLE FOR ALL CONN. "A", "B", "C" & "D" LOADS.

Approved as complying with the Florida Building Code
Date 05/29/03
NOA# 03-0326.04
Miami Dade Product Control Division
By

DRAWN BY: K.P.S.	CHECKED BY: W.W.S.
PLOT: 1=24	DATE: 02/05/03

NO.	REVISION DESCRIPTION	BY	DATE

DRAWING TITLE: LUXBAUM WINDOWS & DOORS STEEL CLIPPED MULLION FOR WOODEN DOORS & WINDOWS

MANUFACTURER: LUXBAU, LLC
2400 CENTERPARK WEST DRIVE, SUITE 150
WEST PALM BEACH, FL 33409
561-684-1500

CONSULTANTS
W. W. SCHAEFER ENGINEERING & CONSULTING, P.A.
8895 N. MILITARY TRAIL; SUITE C-204
PALM BEACH GARDENS, FL 33410
PHONE: 561-775-4902 FAX: 561-775-4903

CERTIFICATION
MAR 19 2003
WARREN W. SCHAEFER, P.E.
P.E. NO. 44135

DRAWING NO. 1201 REV.

SHEET NO. 4 OF 5

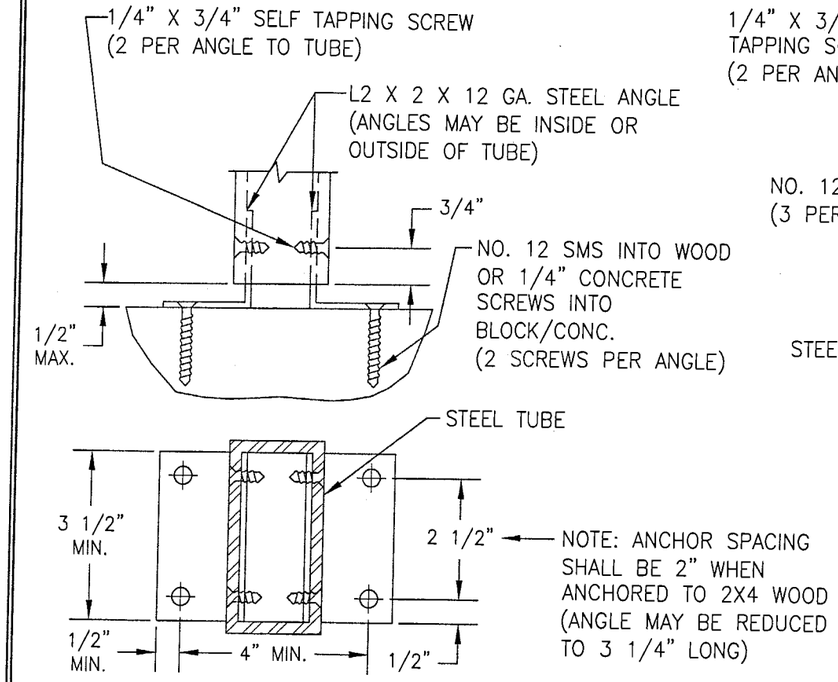

CONN "A" & "C"
(INTO BLOCK, CONCRETE OR WOOD)
"A" = INTO WOOD OR BLOCK
"C" = INTO MIN. 2500 PSI CONCRETE
(WOOD = MIN. NO. 3 SOUTHERN PINE (G=0.55))

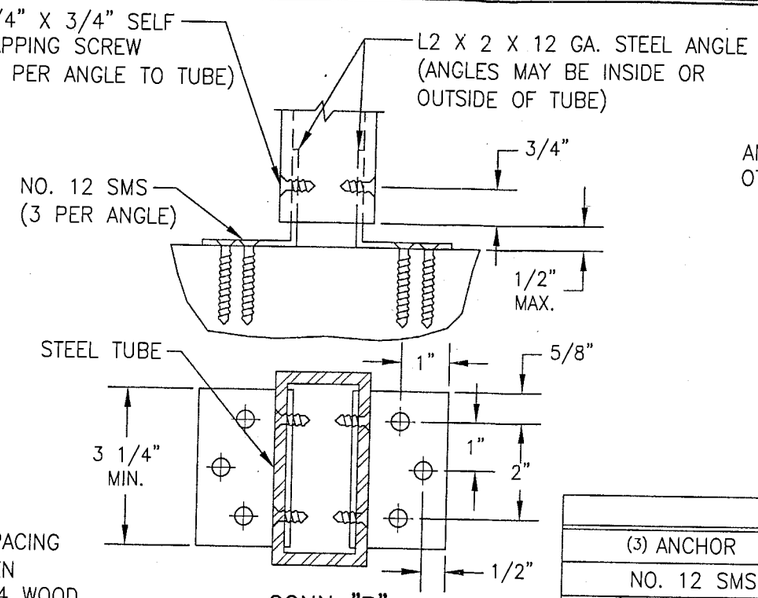

CONN "B"
(INTO WOOD)
MIN. NO. 3 SOUTHERN PINE (G=0.55)

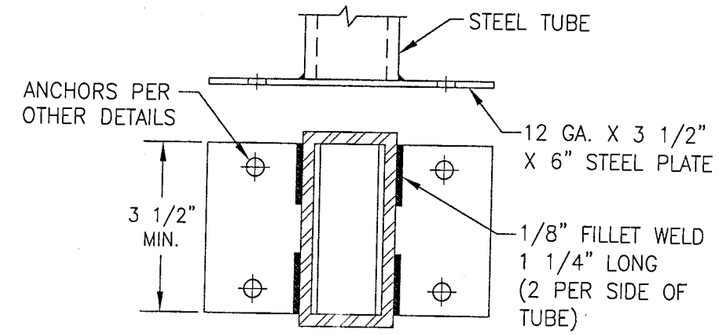

OPTIONAL END PLATE CONNECTION
(APPLICABLE TO ALL CONNECTION TYPES ON THIS SHEET)

ANCHOR REQUIREMENTS			
(3) ANCHOR	SUBSTRATE	MIN. EMBED	MIN. EDGE DIST.
NO. 12 SMS	WOOD	1 1/2"	3/4"
(1) 1/4" CONCRETE SCREW	BLOCK/CONCRETE	1 1/2"	(4) 2 1/4" & 2 1/2"
(2) 3/8" WEDGE/SLEEVE ANCHOR	CONCRETE FILLED BLOCK OR CONCRETE	2"	2 1/2"

(1) CONCRETE SCREWS MAY BE RED HEAD OR ELCO TAPCONS, POWERS RAW TAPPERS OR HILTI KWIK-CON II'S.
(2) WEDGE ANCHORS MAY BE RAMSET RED HEAD DYNABOLTS OR POWERS RAWL POWER BOLT.
(3) IN COASTAL ZONE AREAS, ALL MULLION ANCHORS TO SUBSTRATE MUST BE STAINLESS STEEL.
(4) CONCRETE/BLOCK EDGE DISTANCE FOR CONCRETE SCREWS MUST BE MIN. 2 1/4" AT ONE EDGE & 2 1/2" AT OPPOSITE EDGE.

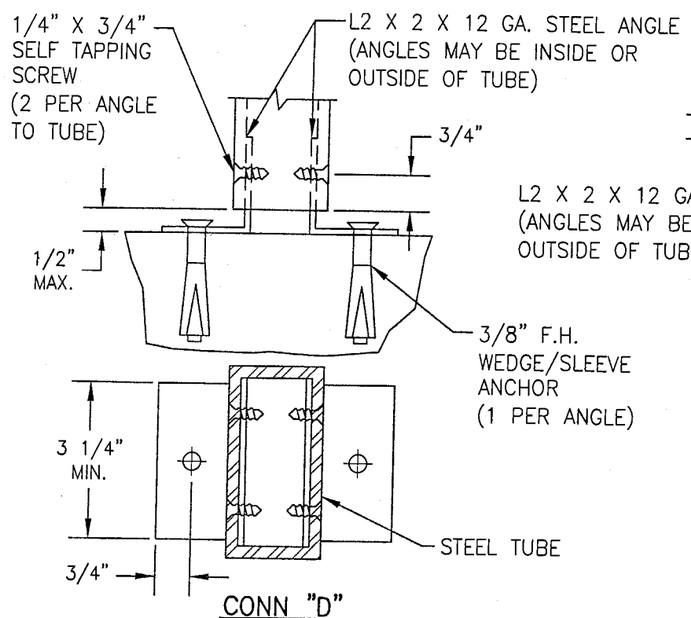

CONN "D"
(INTO CONCRETE FILLED BLOCK OR CONCRETE)

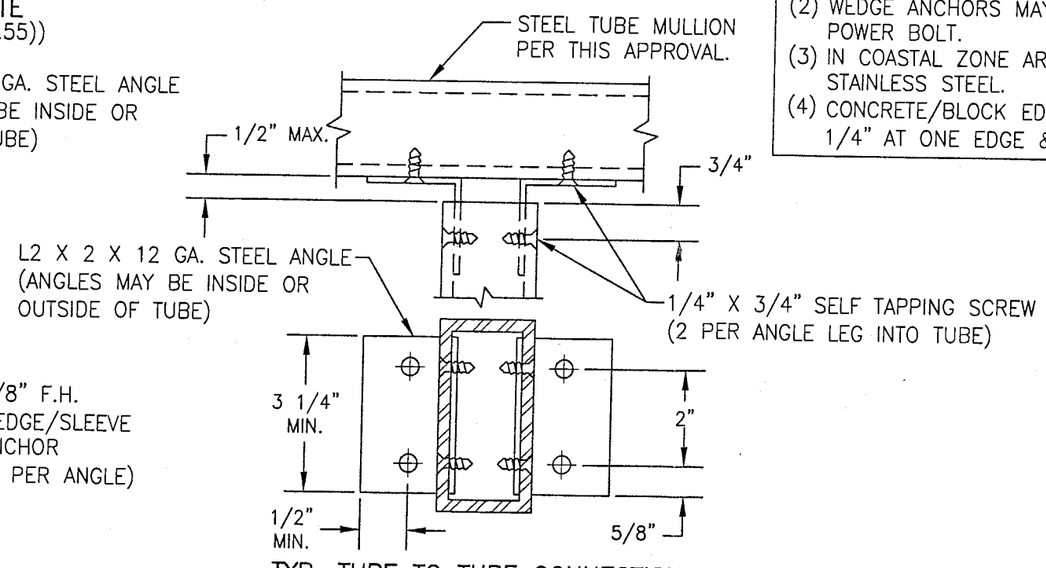

TYP. TUBE TO TUBE CONNECTION

Approved as complying with the
Florida Building Code
Date 05/29/03
NOA# 03-0326.04
Miami Dade Product Control
Division
By

DRAWN BY: K.P.S.	CHECKED BY: W.W.S.
PLOT: 1=3	DATE: 02/05/03

NO.	REVISION DESCRIPTION	BY	DATE

DRAWING TITLE: LUXBAUM WINDOWS & DOORS
STEEL CLIPPED MULLION FOR WOODEN DOORS & WINDOWS

MANUFACTURER: LUXBAU, LLC
2400 CENTERPARK WEST DRIVE, SUITE 150
WEST PALM BEACH, FL 33409
561-684-1500

CONSULTANTS: W. W. SCHAEFER ENGINEERING & CONSULTING, P.A.
8895 N. MILITARY TRAIL; SUITE C-204
PALM BEACH GARDENS, FL 33410
PHONE: 561-775-4902 FAX: 561-775-4903

CERTIFICATION
MAR 19 2003
WARREN W. SCHAEFER, P.E.
P.E. NO. 44135

DRAWING NO. 1201 REV.

SHEET NO. 5 OF 5