MIAMI-DADE

BUILDING CODE COMPLIANCE OFFICE (BCCO)
PRODUCT CONTROL DIVISION

MIAMI-DADE COUNTY, FLORIDA
METRO-DADE FLAGLER BUILDING
140 WEST FLAGLER STREET, SUITE 1603
MIAMI, FLORIDA 33130-1563
(305) 375-2901 FAX (305) 375-2908

NOTICE OF ACCEPTANCE (NOA)

Arch Aluminum & Glass Company
10200 NW 67th Street
Tamarac, FL 33321

SCOPE:

This NOA is being issued under the applicable rules and regulations governing the use of construction materials. The documentation submitted has been reviewed by Miami-Dade County Product Control Division and accepted by the Board of Rules and Appeals (BORA) to be used in Miami Dade County and other areas where allowed by the Authority Having Jurisdiction (AHJ).

This NOA shall not be valid after the expiration date stated below. The Miami-Dade County Product Control Division (In Miami Dade County) and/or the AHJ (in areas other than Miami Dade County) reserve the right to have this product or material tested for quality assurance purposes. If this product or material fails to perform in the accepted manner, the manufacturer will incur the expense of such testing and the AHJ may immediately revoke, modify, or suspend the use of such product or material within their jurisdiction. BORA reserves the right to revoke this acceptance, if it is determined by Miami-Dade County Product Control Division that this product or material fails to meet the requirements of the applicable building code.

This product is approved as described herein, and has been designed to comply with the High Velocity Hurricane Zone of the Florida Building Code.

DESCRIPTION: Series IBSS Structurally Glazed Aluminum Curtain Wall System - Impact

APPROVAL DOCUMENT: Drawing No. **W02-16**, titled "Series IBSS Alum Curtain Wall System", sheets 1 through 8, dated 02/24/02, with revision A dated 04/29/03, prepared by Al-Farooq Corporation, signed and sealed by Humayoun Farooq, P. E., and bearing the Miami-Dade County Product Control Approval stamp with the Notice of Acceptance number and approval date by the Miami-Dade County Product Control Division.

MISSILE IMPACT RATING: Large and Small Missile Impact Resistant

LABELING: Each unit shall bear a permanent label with the manufacturer's name or logo, city, state and following statement: "Miami-Dade County Product Control Approved", unless otherwise noted herein.

RENEWAL of this NOA shall be considered after a renewal application has been filed and there has been no change in the applicable building code negatively affecting the performance of this product.

TERMINATION of this NOA will occur after the expiration date or if there has been a revision or change in the materials, use, and/or manufacture of the product or process. Misuse of this NOA as an endorsement of any product, for sales, advertising or any other purposes shall automatically terminate this NOA. Failure to comply with any section of this NOA shall be cause for termination and removal of NOA.

ADVERTISEMENT: The NOA number preceded by the words Miami-Dade County, Florida, and followed by the expiration date may be displayed in advertising literature. If any portion of the NOA is displayed, then it shall be done in its entirety.

INSPECTION: A copy of this entire NOA shall be provided to the user by the manufacturer or its distributors and shall be available for inspection at the job site at the request of the Building Official.

This NOA consists of this page 1 as well as approval document mentioned above.

The submitted documentation was reviewed by **Manuel Perez, P.E.**

PRODUCT CONTROL ACCEPTED

Arch Aluminum & Glass Company

NOTICE OF ACCEPTANCE: EVIDENCE SUBMITTED

(For File ONLY. Not part of NOA)

A. DRAWINGS

1. Manufacturer's die drawings and sections.
2. Drawing No. **W02-16**, titled "Series IBSS Alum Curtain Wall System", sheets 1 through 8, dated 02/24/02, with revision A dated 04/29/03, prepared by Al-Farooq Corporation, signed, and sealed by Humayoun Farooq, P. E.

B. TESTS

1. Test reports on 1) Air Infiltration Test, per FBC, TAS 202-94
   2) Uniform Static Air Pressure Test, Loading per FBC TAS 202-94
   3) Water Resistance Test, per FBC, TAS 202-94
   4) Large Missile Impact Test per FBC, TAS 201-94
   5) Cyclic Wind Pressure Loading per FBC, TAS 203-94

   along with marked-up drawings and installation diagram of a curtain wall system, prepared by Fenestration Testing Laboratory, Inc., Test Report No. **FTL-2877**, dated December 6, 2001, with addendum letters dated 10/23/02 and 06/16/03 all signed and sealed by Luis Antonio Figueredo, P.E.

C. CALCULATIONS

1. Anchor Calculations and structural analysis, prepared by Al-Farooq Corporation, dated February 18, 2003, and revised on 06/13/03, signed and sealed by Humayoun Farooq, P.E.

D. MATERIAL CERTIFICATIONS

1. Notice of Acceptance No. **98-0608.03** issued to E.I. DuPont DeNemours for "Sentry Glass Plus" dated 01/14/99, expiring on 01/14/02.

E. STATEMENTS

1. Statement letter of conformance, dated February 18, 2003, signed and sealed by Humayoun Farooq, P.E.
2. Statement letter of no financial interest, dated February 18, 2003, signed and sealed by Humayoun Farooq, P.E.
3. Laboratory compliance letter for Test Report No. **FTL- 2877**, issued by Fenestration Testing Laboratory, Inc., dated January 4, 2002, signed and sealed by Luis Figueredo, P.E.

F. OTHER

1. None.

Manuel Perez, P.E.
Product Control Examiner
NOA No 03-0327.12
Expiration Date: July 31, 2008
Approval Date: July 31, 2003

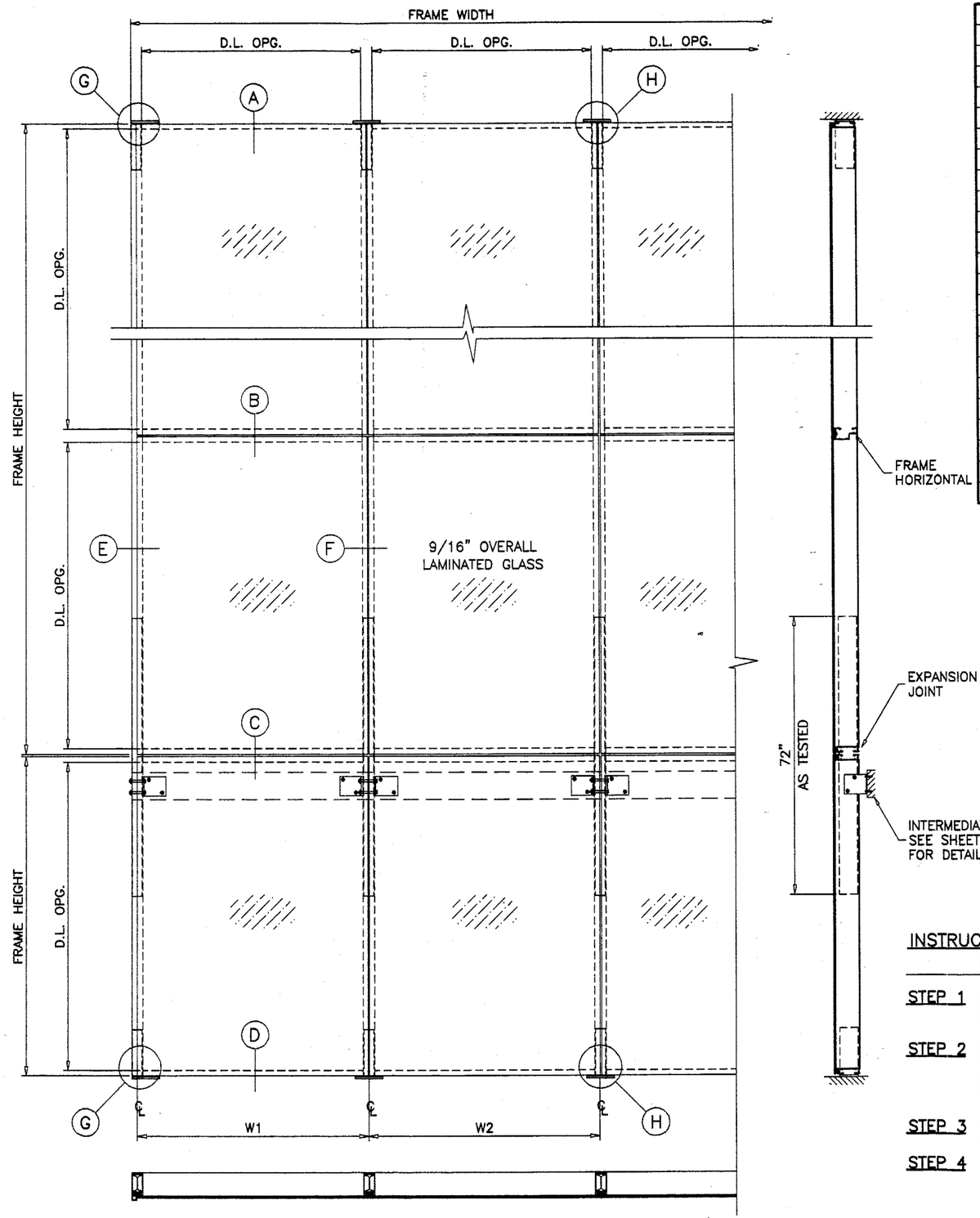

TYPICAL ELEVATION
(NON REINFORCED OPTION SHOWN)

ITEM #	PART #	QUANTITY	DESCRIPTION	MATERIAL	MANF./SUPPLIER/REMARKS
2	AGA-714	AS REQD.	FRAME HORIZONTAL	6063-T5	ARCH ALUMINUM
3	AGA-716	AS REQD.	MALE VERTICAL MULLION	6063-T5	ARCH ALUMINUM
4	AGA-715	AS REQD.	FEMALE VERTICAL MULLION	6063-T5	ARCH ALUMINUM
5	AGA-713	AS REQD.	INTERM. HORIZ. BLIND POCKET	6063-T5	ARCH ALUMINUM
6	AGA-712	AS REQD.	SILICONE BEAD INSERT	6063-T5	ARCH ALUMINUM
7	AGA-392	OPTIONAL	DECORATIVE PRESSURE PLATE	6005-T6	ARCH ALUMINUM
7A	–	OPTIONAL	DECORATIVE PRESSURE PLATE	6005-T6	ARCH ALUMINUM
8	AGA-717	AS REQD.	I-BEAM SPLICE, 72" LONG MIN.	6063-T5	ARCH ALUMINUM
8A	AGA-717	AS REQD.	REINFORCEMENT, FULL LENGTH	6063-T5	ARCH ALUMINUM
9	CW-V	AS REQD.	GASKET SPACER	VINYL	UNIVERSAL RUBBER
10	–	AS REQD.	SETTING BLOCKS	NEOPRENE	1/2" X 1/2" X 2" LONG
11	1/4-20 X2-1/2"	AS REQD.	PRESSURE PLATE SCREWS	–	@ 12" O.C. HORIZ. & 18" O.C. VERT.
12	#12X2-1/2"	4/ CORNER	FRAME ASSEMBLY SCREWS	–	PH SELF DRILLING
13	–	AS REQD.	FILLER EXTRUSION	6063-T5	ARCH ALUMINUM
14	–	AS REQD.	FILLER TUBE	ALUMINUM	1" X 1-3/4" X 1/8"
15	–	AS REQD.	GLASS SUPPORT, 4" LONG	6063-T5	AT 12" FROM VERTICALS
16	–	AS REQD.	GLASS SUPPORT, 4" LONG	6063-T5	AT 12" FROM VERTICALS
16A	–	AS REQD.	GLASS SUPPORT, 4" LONG	6063-T5	AT 12" FROM VERTICALS
17	–	AS REQD.	SNAP-IN PRESSURE PLATE	6063-T5	ARCH ALUMINUM
18	–	AS REQD.	PRESSURE PLATE COVER	6063-T5	ARCH ALUMINUM
19	–	AS REQD.	INTERIOR COVER	6063-T5	ARCH ALUMINUM
20	#790	AS REQD.	PERIMETER SEALANT	–	DOW CORNING
21	–	AS REQD.	OPEN CELL FOAM BACKER ROD	–	DENVER FOAM

STRUCTURAL GLAZED
ALUMINUM CURTAIN WALL SYSTEM SERIES IBSS (L.M.I.)

CURTAIN WALL SYSTEM IS RATED FOR LARGE MISSILE IMPACT.
SHUTTERS ARE NOT REQUIRED.

CODE REQUIREMENTS FOR SAFEGUARDS MUST BE OBSERVED.

THIS SYSTEM CAN BE USED WITH OR WITHOUT PRESSURE PLATES.

THIS PRODUCT IS DESIGNED TO COMPLY WITH THE HIGH VELOCITY HURRICANE ZONE OF THE 2001 FLORIDA BUILDING CODE.
ALSO FOR WIND LOADS AS PER ASCE 7-88. ASCE 7-93, ASCE 7-95 OR ASCE 7-98 AS REQUIRED BY PREVAILING BUILDING CODE.

WOOD BUCKS BY OTHERS, MUST BE ANCHORED PROPERLY TO TRANSFER LOADS TO THE STRUCTURE.

ANCHORS SHALL BE AS LISTED, SPACED AS SHOWN ON DETAILS. ANCHOR EMBEDMENT TO BASE MATERIAL SHALL BE BEYOND WALL DRESSING OR STUCCO.

ALL STEEL IN CONTACT WITH ALUMINUM TO BE PAINTED OR PLATED AS REQUIRED BY CODE.

INSTRUCTIONS:

USE CHARTS AS FOLLOWS.

STEP 1 DETERMINE DESIGN WIND LOAD REQUIREMENT BASED ON WIND VELOCITY, BLDG. HEIGHT, WIND ZONE USING APPLICABLE ASCE 7 STANDARD.

STEP 2 CHECK MULLION CAPACITY FOR A GIVEN SPACING AND HEIGHT USING MULLION LOAD CAPACITY TABLE ON SHEET 2 FOR SINGLE SPANS, AND MULLION LOAD CAPACITY TABLES ON SHEET 3 FOR EQUAL MULTIPLE SPANS.
THE CAPACITY SHOULD EXCEED THE DESIGN LOAD.

STEP 3 SEE GLASS LOAD CAPACITY TABLES ON SHEETS 3 FOR DESIGN LOAD CAPACITY OF GLASS SIZE.

STEP 4 THE LOWEST VALUE RESULTING FROM STEPS 2 AND 3 SHALL APPLY TO ENTIRE SYSTEM.

$$\text{AVG. MULL SPACING} = \frac{W1 + W2}{2}$$

Engr: DR. HUMAYOUN FAROOQ
STRUCTURES
FLA. PE # 16557
C.A.N. 3538

JUN 16 2003

Approved as complying with the Florida Buiding Code
Date JULY 31, 2003
NOA# 03-0327.12
Miami Dade Product Control Division
By Mamud Perez

AL-FAROOQ CORPORATION
ENGINEERS, PLANNERS & PRODUCT DESIGN
1235 SW 87 AVE
MIAMI, FLORIDA 33174
TEL. (305) 264-8100 FAX. (305) 262-6978

STORE\W02-16AA

SERIES IBSS ALUM CURTAIN WALL SYSTEM

ARCH ALUMINUM & GLASS L.C.
10200 N.W. 67TH STREET
TAMARAC, FL. 33321
TEL. (800) 432-8132 FAX. (954) 724-9293

revisions:			
no	date	by	description
A	04.29.03		REV. PER BCCO COMMENTS

date: 02-24-02
scale: 3/8"=1'-0"
dr. by: HAMID
chk. by:

drawing no.
W02-16

MULLION LOAD CAPACITY - PSF
SINGLE SPANS

NOMINAL DIMS.		UNREINFORCED		REINFORCED	
AVG. MULL SPACING	FRAME HEIGHT	EXT.(+)	INT.(−)	EXT.(+)	INT.(−)
36"	114"	95.0	95.0	95.0	95.0
39"		95.0	95.0	95.0	95.0
42"		95.0	95.0	95.0	95.0
45"		95.0	95.0	95.0	95.0
48"		95.0	95.0	95.0	95.0
51"		95.0	95.0	95.0	95.0
54"		95.0	95.0	95.0	95.0
57"		95.0	95.0	95.0	95.0
60"		95.0	95.0	95.0	95.0
63"		95.0	95.0	95.0	95.0
66"		93.4	93.4	95.0	95.0
69"		89.4	89.4	95.0	95.0
72"		85.6	85.6	95.0	95.0
36"	120"	95.0	95.0	95.0	95.0
39"		95.0	95.0	95.0	95.0
42"		95.0	95.0	95.0	95.0
45"		95.0	95.0	95.0	95.0
48"		95.0	95.0	95.0	95.0
51"		95.0	95.0	95.0	95.0
54"		95.0	95.0	95.0	95.0
57"		95.0	95.0	95.0	95.0
60"		92.7	92.7	95.0	95.0
63"		88.3	88.3	95.0	95.0
66"		84.3	84.3	95.0	95.0
69"		80.6	80.6	95.0	95.0
72"		77.3	77.3	95.0	95.0
36"	126"	95.0	95.0	95.0	95.0
39"		95.0	95.0	95.0	95.0
42"		95.0	95.0	95.0	95.0
45"		95.0	95.0	95.0	95.0
48"		95.0	95.0	95.0	95.0
51"		95.0	95.0	95.0	95.0
54"		93.5	93.5	95.0	95.0
57"		88.5	88.5	95.0	95.0
60"		84.1	84.1	95.0	95.0
63"		80.1	80.1	95.0	95.0
66"		76.5	76.5	95.0	95.0
69"		73.1	73.1	95.0	95.0
72"		70.1	70.1	95.0	95.0
36"	132"	95.0	95.0	95.0	95.0
39"		95.0	95.0	95.0	95.0
42"		95.0	95.0	95.0	95.0
45"		95.0	95.0	95.0	95.0
48"		95.0	95.0	95.0	95.0
51"		90.2	90.2	95.0	95.0
54"		85.2	85.2	95.0	95.0
57"		80.7	80.7	95.0	95.0
60"		76.6	76.6	95.0	95.0
63"		73.0	73.0	95.0	95.0
66"		69.7	69.7	95.0	95.0
69"		66.6	66.6	95.0	95.0
72"		63.9	63.9	93.0	93.0

MULLION LOAD CAPACITY - PSF
SINGLE SPANS

NOMINAL DIMS.		UNREINFORCED		REINFORCED	
AVG. MULL SPACING	FRAME HEIGHT	EXT.(+)	INT.(−)	EXT.(+)	INT.(−)
36"	138"	95.0	95.0	95.0	95.0
39"		95.0	95.0	95.0	95.0
42"		95.0	95.0	95.0	95.0
45"		93.5	93.5	95.0	95.0
48"		87.7	87.7	95.0	95.0
51"		82.5	82.5	95.0	95.0
54"		77.9	77.9	95.0	95.0
57"		73.8	73.8	95.0	95.0
60"		70.1	70.1	95.0	95.0
63"		66.8	66.8	95.0	95.0
66"		63.7	63.7	92.8	92.8
69"		61.0	61.0	88.7	88.7
72"		58.4	58.4	85.1	85.1
36"	144"	95.0	95.0	95.0	95.0
39"		95.0	95.0	95.0	95.0
42"		90.6	90.6	95.0	95.0
45"		84.5	84.5	95.0	95.0
48"		79.2	79.2	95.0	95.0
51"		74.6	74.6	95.0	95.0
54"		70.4	70.4	95.0	95.0
57"		66.7	66.7	95.0	95.0
60"		63.4	63.4	92.3	92.3
63"		60.4	60.4	87.9	87.9
66"		57.6	57.6	83.9	83.9
69"		55.1	55.1	80.2	80.2
72"		52.8	52.8	76.9	76.9
36"	150"	93.5	93.5	95.0	95.0
39"		86.3	86.3	95.0	95.0
42"		80.1	80.1	95.0	95.0
45"		74.8	74.8	95.0	95.0
48"		70.1	70.1	95.0	95.0
51"		66.0	66.0	95.0	95.0
54"		62.3	62.3	90.7	90.7
57"		59.0	59.0	85.9	85.9
60"		56.1	56.1	81.6	81.6
63"		53.4	53.4	77.8	77.8
66"		51.0	51.0	74.2	74.2
69"		48.8	48.8	71.0	71.0
72"		46.7	46.7	68.0	68.0
36"	156"	83.1	83.1	95.0	95.0
39"		76.7	76.7	95.0	95.0
42"		71.2	71.2	95.0	95.0
45"		66.5	66.5	95.0	95.0
48"		62.3	62.3	90.7	90.7
51"		58.7	58.7	85.4	85.4
54"		55.4	55.4	80.6	80.6
57"		52.5	52.5	76.4	76.4
60"		49.9	49.9	72.6	72.6
63"		47.5	47.5	69.1	69.1
66"		45.3	45.3	66.0	66.0
69"		43.4	43.4	63.1	63.1
72"		41.6	41.6	60.5	60.5

MULLION LOAD CAPACITY - PSF
SINGLE SPANS

NOMINAL DIMS.		UNREINFORCED		REINFORCED	
AVG. MULL SPACING	FRAME HEIGHT	EXT.(+)	INT.(−)	EXT.(+)	INT.(−)
36"	162"	74.2	74.2	95.0	95.0
39"		68.5	68.5	95.0	95.0
42"		63.6	63.6	92.6	92.6
45"		59.4	59.4	86.4	86.4
48"		55.7	55.7	81.0	81.0
51"		52.4	52.4	76.2	76.2
54"		49.5	49.5	72.0	72.0
57"		46.9	46.9	68.2	68.2
60"		44.5	44.5	64.8	64.8
63"		42.4	42.4	61.7	61.7
66"		40.5	40.5	58.9	58.9
69"		38.7	38.7	56.4	56.4
72"		37.1	37.1	54.0	54.0
36"	168"	66.5	66.5	95.0	95.0
39"		61.4	61.4	89.4	89.4
42"		57.0	57.0	83.0	83.0
45"		53.2	53.2	77.5	77.5
48"		49.9	49.9	72.6	72.6
51"		47.0	47.0	68.4	68.4
54"		44.4	44.4	64.6	64.6
57"		42.0	42.0	61.2	61.2
60"		39.9	39.9	58.1	58.1
63"		38.0	38.0	55.3	55.3
66"		36.3	36.3	52.8	52.8
69"		34.7	34.7	50.5	50.5
72"		33.3	33.3	48.4	48.4
36"	174"	59.9	59.9	87.2	87.2
39"		55.3	55.3	80.5	80.5
42"		51.3	51.3	74.7	74.7
45"		47.9	47.9	69.7	69.7
48"		44.9	44.9	65.4	65.4
51"		42.3	42.3	61.5	61.5
54"		39.9	39.9	58.1	58.1
57"		37.8	37.8	55.1	55.1
60"		35.9	35.9	52.3	52.3
63"		34.2	34.2	49.8	49.8
66"		32.7	32.7	47.5	47.5
69"		31.2	31.2	45.5	45.5
72"		29.9	29.9	43.6	43.6

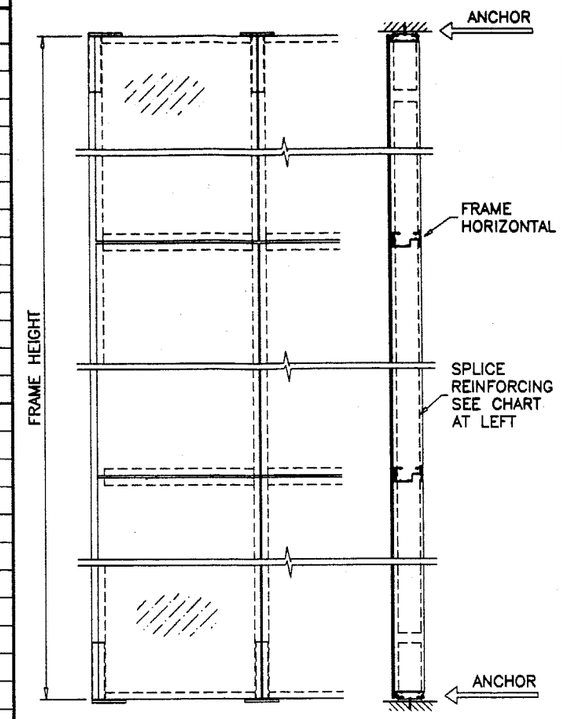

SINGLE SPAN TABLES

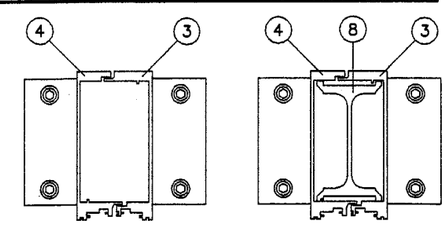

UNREINFORCED REINFORCED

Engr: DR. HUMAYOUN FAROOQ
STRUCTURES
FLA. PE # 16557
C.A.N. 3538

JUN 16 2003

Approved as complying with the Florida Buiding Code
Date July 31, 2003
NOA# 03-0327.12
Miami Dade Product Control Division
By

AL-FAROOQ CORPORATION
ENGINEERS, PLANNERS & PRODUCT DESIGN
1235 SW 87 AVE
MIAMI, FLORIDA 33174
TEL. (305) 264-8100 FAX. (305) 262-6978
STORE\W02-16AA

SERIES IBSS ALUM CURTAIN WALL SYSTEM

ARCH ALUMINUM & GLASS L.C.
10200 N.W. 67TH STREET
TAMARAC, FL. 33321
TEL. (800) 432-8132 FAX. (954) 724-9293

revisions:

no	date	by	description
A	04.29.03		REV. PER BCCO COMMENTS

date: 02-24-02
scale: 3/8" = 1"
dr. by: HAMID
chk. by:

drawing no. W02-16

sheet 2 of 8

MULLION LOAD CAPACITY - PSF MULTIPLE SPANS				
NOMINAL DIMS.		UNREINFORCED		ANCHOR TYPES
AVG. MULL SPACING	SPAN = L	EXT. (+)	INT. (-)	
36"	120"	95.0	95.0	A
42"		95.0	95.0	A
48"		95.0	95.0	A
54"		95.0	95.0	A
60"		95.0	95.0	A
66"		95.0	95.0	B
72"		95.0	95.0	B
36"	126"	95.0	95.0	A
42"		95.0	95.0	A
48"		95.0	95.0	A
54"		95.0	95.0	A
60"		95.0	95.0	A
66"		95.0	95.0	B
72"		95.0	95.0	B
36"	132"	95.0	95.0	A
42"		95.0	95.0	A
48"		95.0	95.0	A
54"		95.0	95.0	A
60"		95.0	95.0	A
66"		95.0	95.0	B
36"	138"	95.0	95.0	A
42"		95.0	95.0	A
48"		95.0	95.0	A
54"		95.0	95.0	A
60"		95.0	95.0	B
66"		95.0	95.0	B
36"	144"	95.0	95.0	A
42"		95.0	95.0	A
48"		95.0	95.0	A
54"		95.0	95.0	A
60"		95.0	95.0	B
36"	150"	95.0	95.0	A
42"		95.0	95.0	A
48"		95.0	95.0	A
54"		95.0	95.0	A
60"		88.7	88.7	B
36"	156"	95.0	95.0	A
42"		95.0	95.0	A
48"		95.0	95.0	A
54"		85.7	85.7	A
60"		77.2	77.2	A
36"	162"	95.0	95.0	A
42"		95.0	95.0	A
48"		84.0	84.0	A
54"		75.0	75.0	A
36"	168"	95.0	95.0	A
42"		85.0	85.0	A
48"		74.0	74.0	A
54"		66.0	66.0	A
36"	174"	88.0	88.0	A
42"		75.0	75.0	A
48"		66.0	66.0	A

MULLION LOAD CAPACITY - PSF MULTIPLE SPANS				
NOMINAL DIMS.		UNREINFORCED		ANCHOR TYPES
AVG. MULL SPACING	SPAN = L	EXT. (+)	INT. (-)	
36"	180"	78.0	78.0	A
42"		67.0	67.0	A
48"		58.0	58.0	A
36"	186"	70.0	70.0	A
42"		60.0	60.0	A
48"		52.0	52.0	A
36"	192"	63.0	63.0	A
42"		54.0	54.0	A
48"		47.0	47.0	A

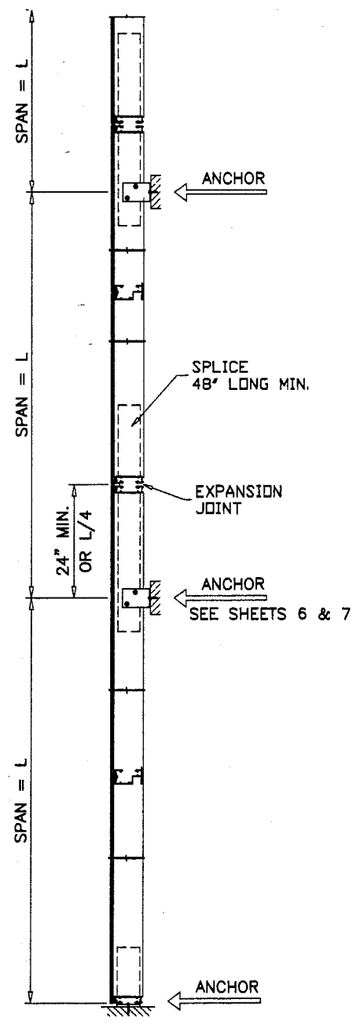

EQUAL MULTIPLE SPAN TABLES

(UN-EQUAL SPANS TO BE CHECKED ON JOB TO JOB BASIS).

IN CONTINUOUS CURTAIN WALL SYSTEM PROVIDE ADDITIONAL BRACE OR SUPPORT AT EVERY FOURTH FLOOR.

GLASS LOAD CAPACITY - PSF			
D.L.O. DIMS.		LAMINATED GLASS	
A/B	A/B	EXT. (+)	INT. (-)
54"	54"	88.0	88.0
57"		88.0	88.0
60"		88.0	88.0
63"		88.0	88.0
66"		88.0	88.0
69"		88.0	88.0
72"		88.0	88.0
75"		88.0	88.0
78"		88.0	88.0
81"		88.0	88.0
84"		88.0	88.0
48"	60"	95.0	95.0
51"		93.2	93.2
54"		88.0	88.0
57"		83.4	83.4
60"		79.2	79.2
63"		79.2	79.2
66"		79.2	79.2
69"		79.2	79.2
72"		79.2	79.2
75"		79.2	79.2
45"	66"	95.0	95.0
48"		95.0	95.0
51"		93.2	93.2
54"		88.0	88.0
57"		83.4	83.4
60"		79.2	79.2
63"		75.4	75.4
66"		72.0	72.0
69"		72.0	72.0
42"	72"	95.0	95.0
45"		95.0	95.0
48"		95.0	95.0
51"		93.2	93.2
54"		88.0	88.0
57"		83.4	83.4
60"		79.2	79.2
63"		75.4	75.4
39"	78"	95.0	95.0
42"		95.0	95.0
45"		95.0	95.0
48"		95.0	95.0
51"		93.2	93.2
54"		88.0	88.0
57"		83.4	83.4
36"	84"	95.0	95.0
39"		95.0	95.0
42"		95.0	95.0
45"		95.0	95.0
48"		95.0	95.0
51"		93.2	93.2
54"		88.0	88.0

GLASS LOAD CAPACITY - PSF			
D.L.O. DIMS.		LAMINATED GLASS	
A/B	A/B	EXT. (+)	INT. (-)
33"	90"	95.0	95.0
36"		95.0	95.0
39"		95.0	95.0
42"		95.0	95.0
45"		95.0	95.0
48"		95.0	95.0
30"	96"	95.0	95.0
33"		95.0	95.0
36"		95.0	95.0
39"		95.0	95.0
42"		95.0	95.0
45"		95.0	95.0
30"	102"	95.0	95.0
33"		95.0	95.0
36"		95.0	95.0
39"		95.0	95.0
42"		95.0	95.0
30"	106"	95.0	95.0
33"		95.0	95.0
36"		95.0	95.0
39"		95.0	95.0
42"		95.0	95.0
30"	108"	95.0	95.0
33"		95.0	95.0
36"		95.0	95.0
39"		95.0	95.0
42"		95.0	95.0
30"	114"	95.0	95.0
33"		95.0	95.0
36"		95.0	95.0
39"		95.0	95.0
30"	120"	95.0	95.0
33"		95.0	95.0
36"		95.0	95.0
30"	126"	95.0	95.0
33"		95.0	95.0
36"		95.0	95.0
30"	132"	95.0	95.0
33"		95.0	95.0
30"	144"	95.0	95.0
30"	150"	95.0	95.0

GLASS LOAD CAPACITY TABLES

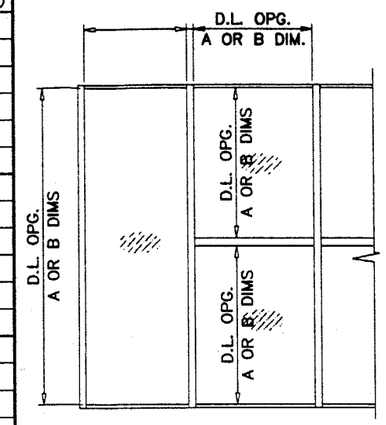

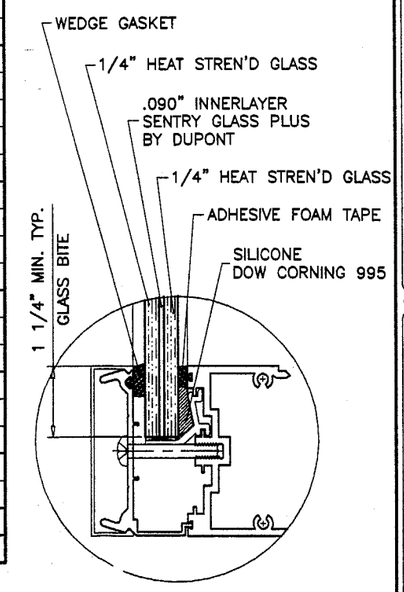

GLAZING DETAIL

Engr: DR. HUMAYOUN FAROOQ
STRUCTURES
FLA. PE # 16557
C.A.N. 3538

JUN 16 2003

Approved as complying with the Florida Buiding Code
Date JULY 31, 2003
NOA# 03-0327.12
Miami Dade Product Control Division
By Manuel Perez

AL-FAROOQ CORPORATION
ENGINEERS, PLANNERS & PRODUCT DESIGN
1235 SW 87 AVE
MIAMI, FLORIDA 33174
TEL. (305) 264-8100 FAX. (305) 262-6978
STORE\W02-16AA

SERIES IBSS ALUM CURTAIN WALL SYSTEM

ARCH ALUMINUM & GLASS L.C.
10200 N.W. 67TH STREET
TAMARAC, FL. 33321
TEL (800) 432-8132 FAX. (954) 724-9293

revisions:			
no	date	by	description
A	04.29.03		REV. PER BCCO COMMENTS

date: 02-24-02
scale: 3/8" = 1"
dr. by: HAMID
chk. by:

drawing no. W02-16

sheet 3 of 8

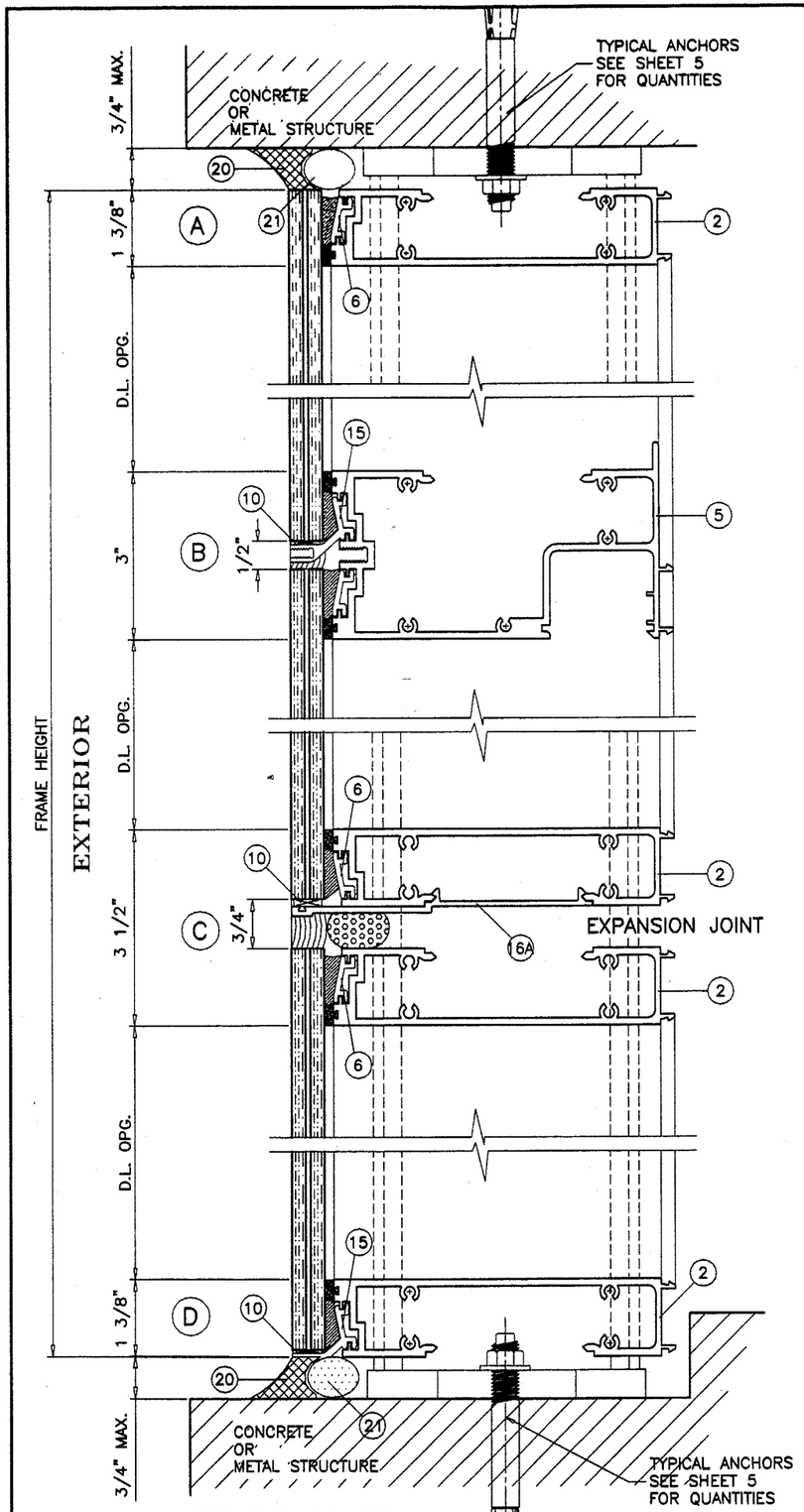

VERTICAL DETAILS
STRUCTURAL GLAZED SYSTEM

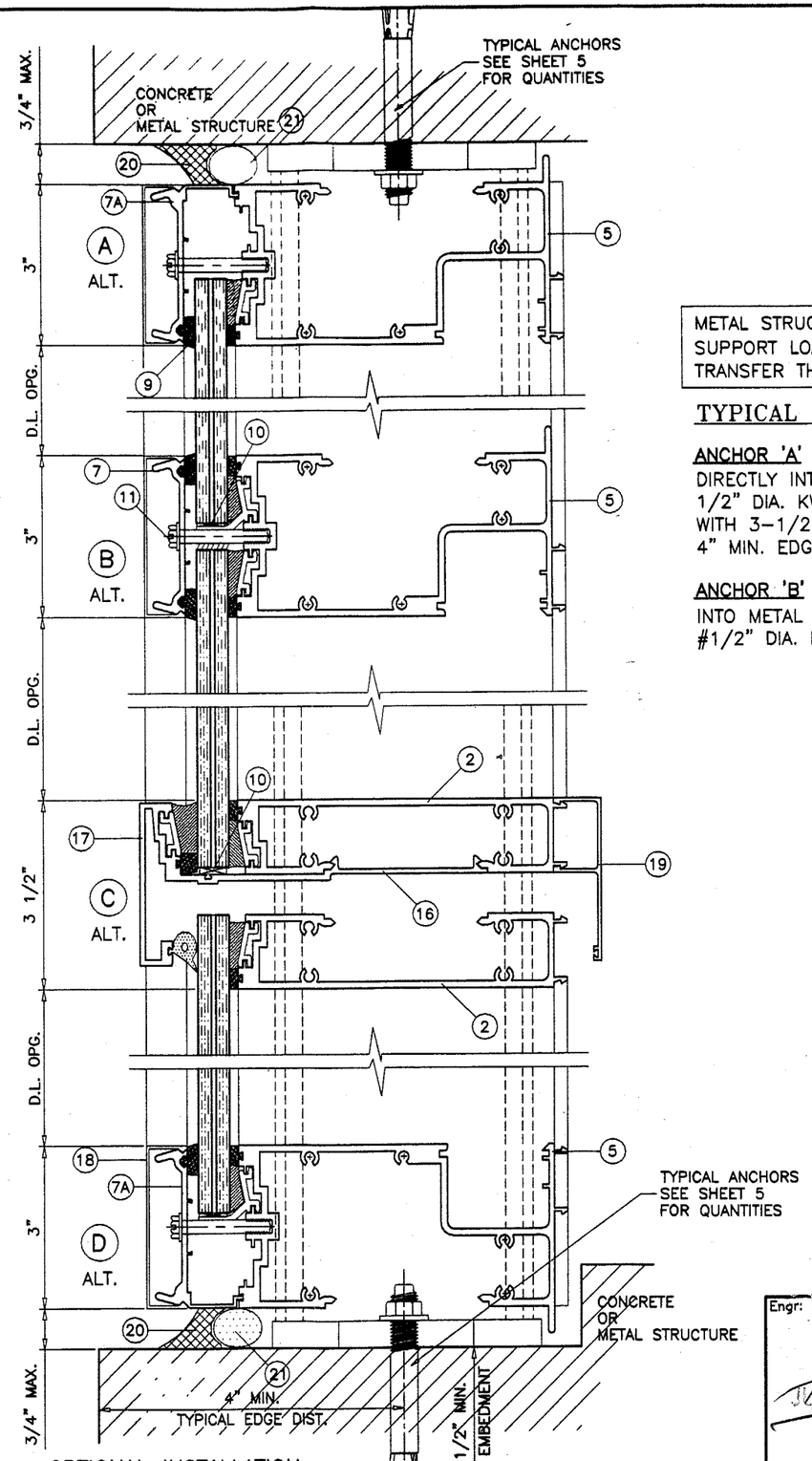

OPTIONAL INSTALLATION
WITH DECORATIVE PRESSURE PLATE

METAL STRUCTURES NOT BY ARCH ALUMINUM, MUST SUPPORT LOADS IMPOSED BY GLAZING SYSTEM AND TRANSFER THEM TO THE BUILDING STRUCTURE.

TYPICAL ANCHORS: SEE ELEV. FOR SPACING

ANCHOR 'A'
DIRECTLY INTO MASONRY
1/2" DIA. KWIK BOLTS
WITH 3-1/2" MIN. EMBED INTO CONCRETE.
4" MIN. EDGE DIST.

ANCHOR 'B'
INTO METAL STRUCTURES (STEEL 1/4" MIN. THICKNESS)
#1/2" DIA. BOLTS INTO TAPPED HOLES

Engr: DR. HUMAYOUN FAROOQ
STRUCTURES
FLA. PE # 16557
C.A.N. 3538
JUL 16 2003

Approved as complying with the Florida Buiding Code
Date JULY 31, 2003
NOA# 03-0327.12
Miami Dade Product Control Division
By Manuel Perez

AL-FAROOQ CORPORATION
ENGINEERS, PLANNERS & PRODUCT DESIGN
1235 SW 87 AVE
MIAMI, FLORIDA 33174
TEL. (305) 264-8100 FAX. (305) 262-6978

STORE\W02-16AA

SERIES IBSS ALUM CURTAIN WALL SYSTEM

ARCH ALUMINUM & GLASS L.C.
10200 N.W. 67TH STREET
TAMARAC, FL. 33321
TEL. (800) 432-8132 FAX. (954) 724-9293

revisions:

no	date	by	description
A	04.29.03		REV. PER BCCO COMMENTS

date: 02-24-02
scale: 3/8" = 1"
dr. by: HAMID
chk. by:

drawing no.
W02-16

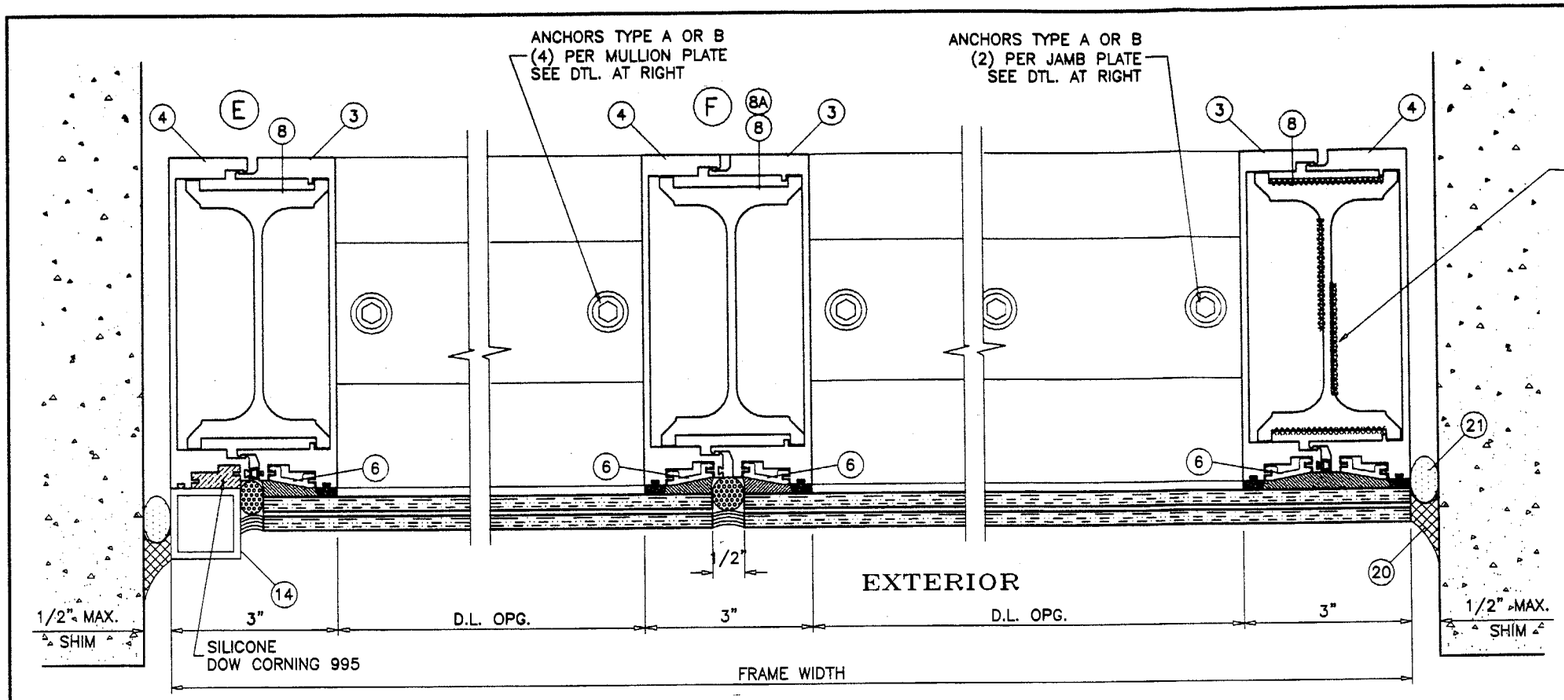

JAMBS ARE DESIGNED TO BE ANCHORED AT TOP AND BOTTOM ONLY

HORIZONTAL DETAILS
STRUCTURAL GLAZED SYSTEM

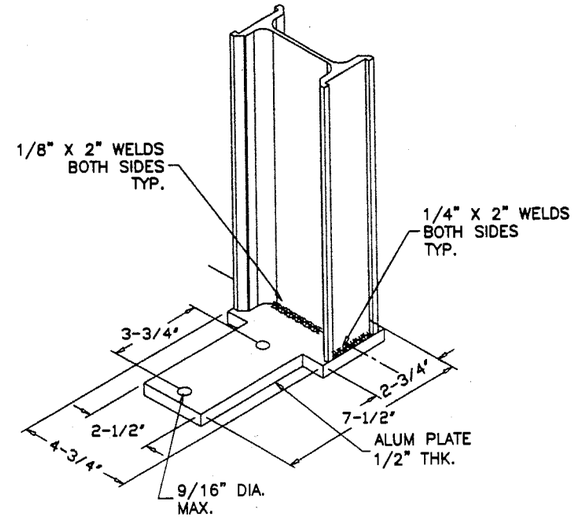

JAMB ANCHOR
DETAIL 'G'

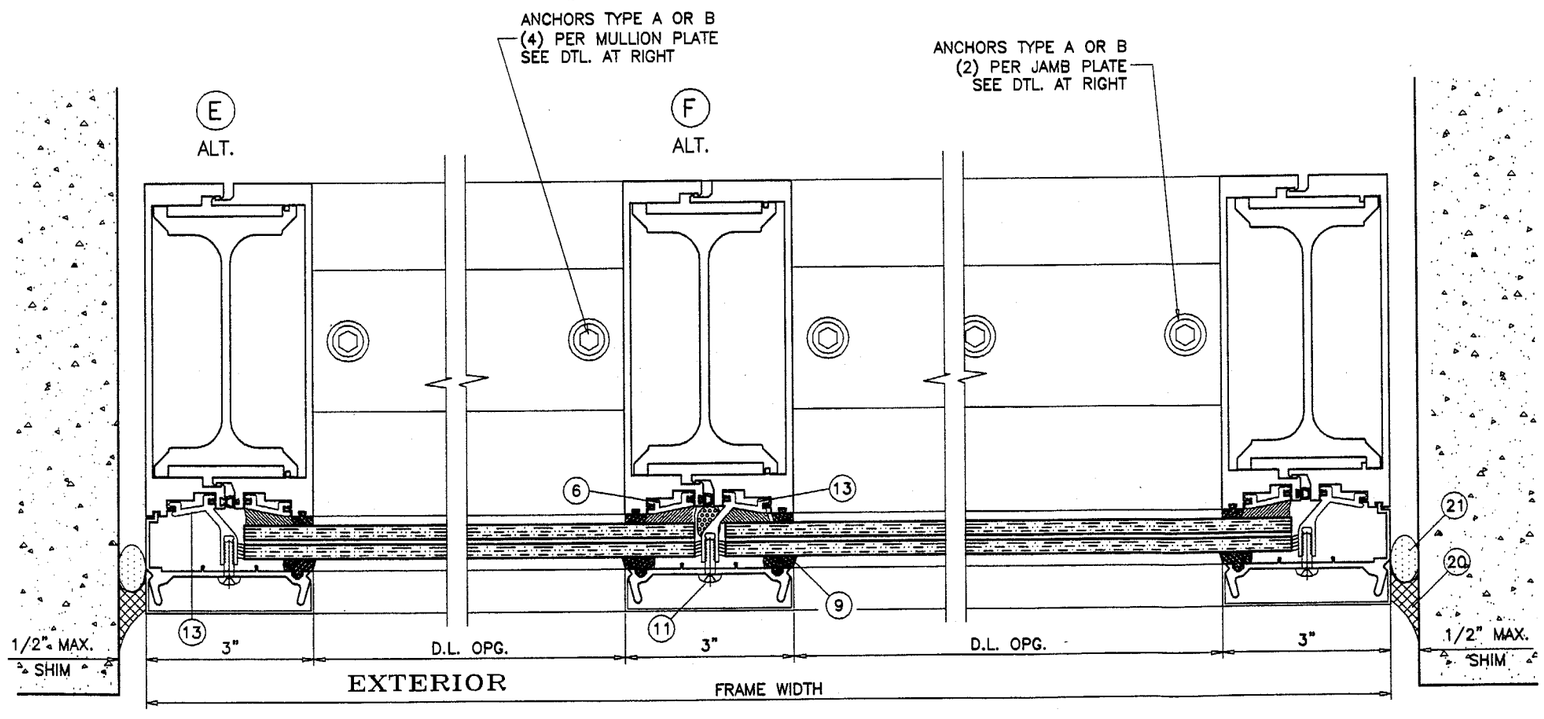

OPTIONAL INSTALLATION
WITH DECORATIVE PRESSURE PLATE

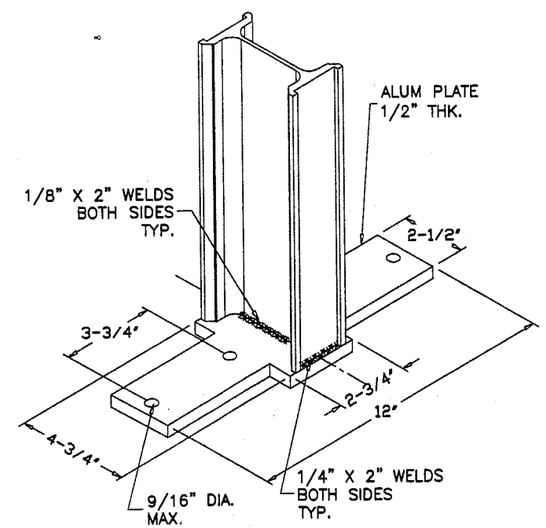

MULLION ANCHOR
DETAIL 'H'

Engr: DR. HUMAYOUN FAROOQ
STRUCTURES
FLA. PE # 16557
C.A.N. 3538

JUN 16 2003

Approved as complying with the Florida Buiding Code
Date JULY 31, 2003
NOA# 03-0327.12
Miami Dade Product Control Division
By

AL-FAROOQ CORPORATION
ENGINEERS, PLANNERS & PRODUCT DESIGN
1235 SW 87 AVE
MIAMI, FLORIDA 33174
TEL. (305) 264-8100 FAX. (305) 262-6978

STORE\W02-16AA

SERIES IBSS ALUM CURTAIN WALL SYSTEM

ARCH ALUMINUM & GLASS L.C.
10200 N.W. 67TH STREET
TAMARAC, FL. 33321
TEL. (800) 432-8132 FAX. (954) 724-9293

revisions:

no	date	by	description
A	04.29.03		REV. PER BCCO COMMENTS

date: 02-24-02
scale: 3/8" = 1"
dr. by: HAMID
chk. by:

drawing no.
W02-16

sheet 5 of 8

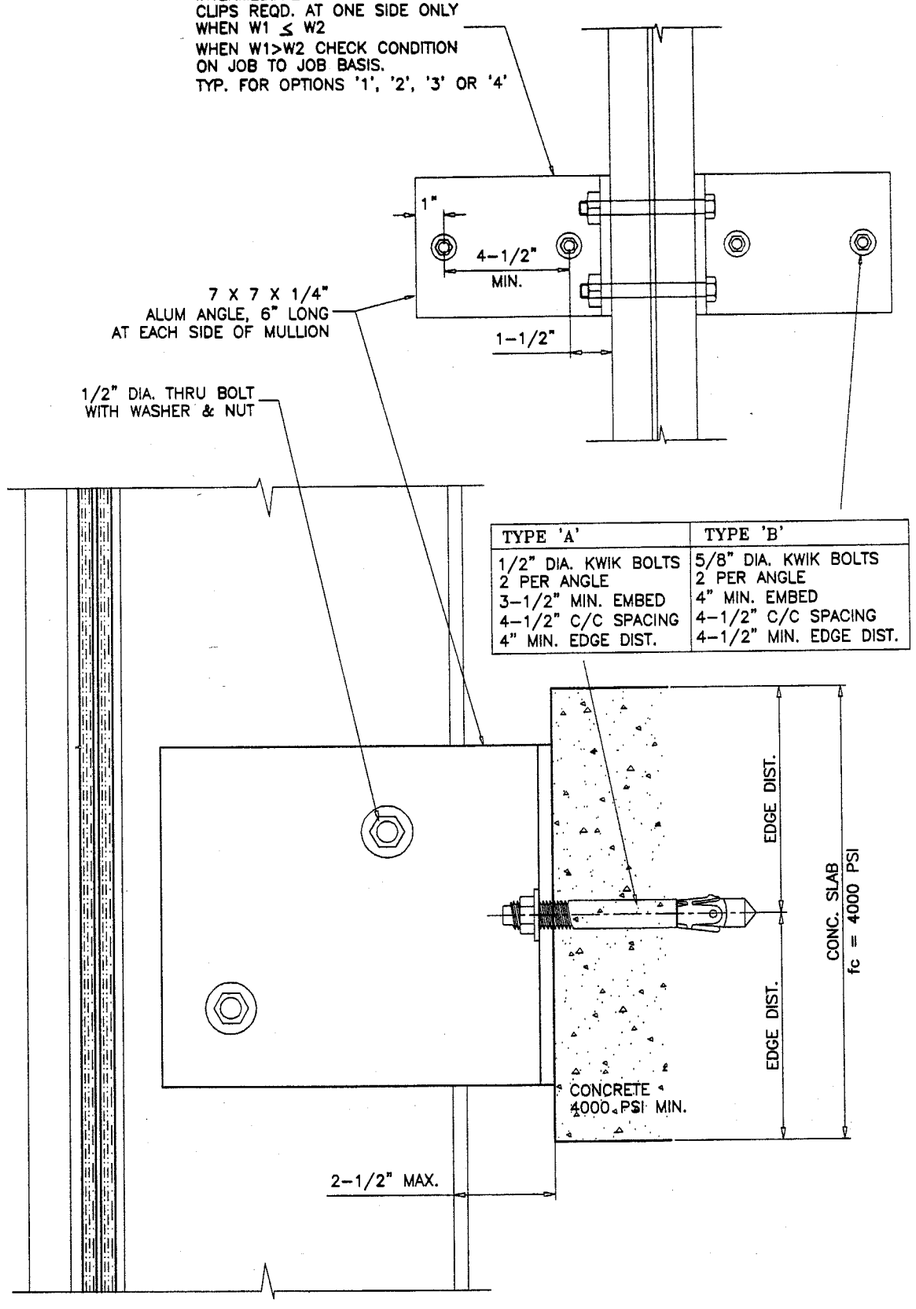

TYPE 'A'	TYPE 'B'
1/2" DIA. KWIK BOLTS 2 PER ANGLE 3-1/2" MIN. EMBED 4-1/2" C/C SPACING 4" MIN. EDGE DIST.	5/8" DIA. KWIK BOLTS 2 PER ANGLE 4" MIN. EMBED 4-1/2" C/C SPACING 4-1/2" MIN. EDGE DIST.

INTERMEDIATE ANCHORS
OPTION '1'

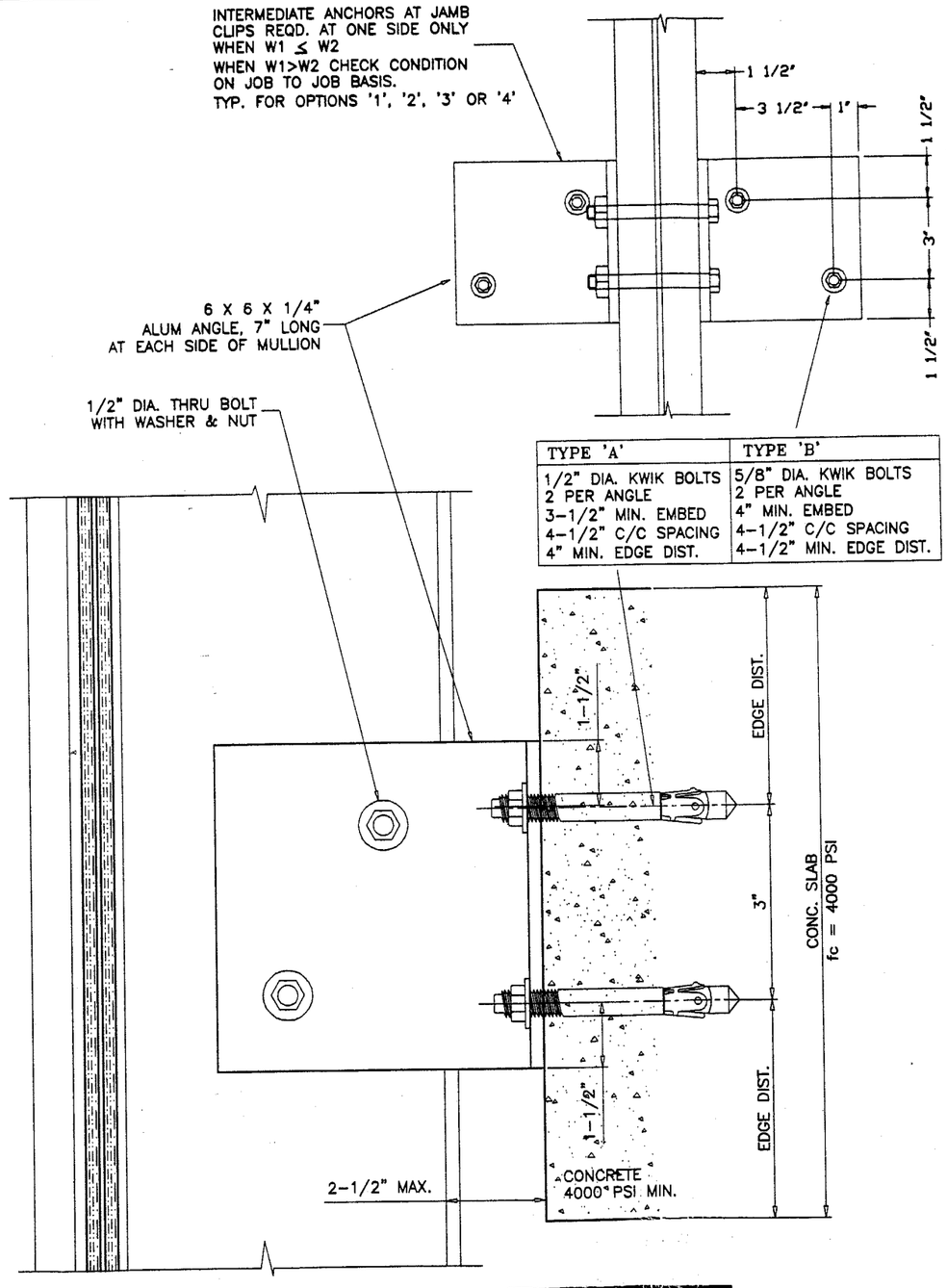

TYPE 'A'	TYPE 'B'
1/2" DIA. KWIK BOLTS 2 PER ANGLE 3-1/2" MIN. EMBED 4-1/2" C/C SPACING 4" MIN. EDGE DIST.	5/8" DIA. KWIK BOLTS 2 PER ANGLE 4" MIN. EMBED 4-1/2" C/C SPACING 4-1/2" MIN. EDGE DIST.

INTERMEDIATE ANCHORS
OPTION '2'

ANCHORS INTO CONCRETE

Engr: DR. HUMAYOUN FAROOQ
STRUCTURES
FLA. PE # 16557
C.A.N. 3538

JUN 16 2003

Approved as complying with the Florida Buiding Code
Date JULY 31, 2003
NOA# 03-0327.12
Miami Dade Product Control Division
By Manuel Seraz

AL-FAROOQ CORPORATION
ENGINEERS, PLANNERS & PRODUCT DESIGN
1235 SW 87 AVE
MIAMI, FLORIDA 33174
TEL. (305) 264-8100 FAX. (305) 262-6978

STORE\W02-16AA

SERIES IBSS ALUM CURTAIN WALL SYSTEM

ARCH ALUMINUM & GLASS L.C.
10200 N.W. 67TH STREET
TAMARAC, FL. 33321
TEL. (800) 432-8132 FAX. (954) 724-9293

revisions:

no	date	by	description
A	04.29.03		REV. PER BCCO COMMENTS

date: 02-24-02
scale: 3/8" = 1"
dr. by: HAMID
chk. by:

drawing no.
W02-16

sheet 6 of 8

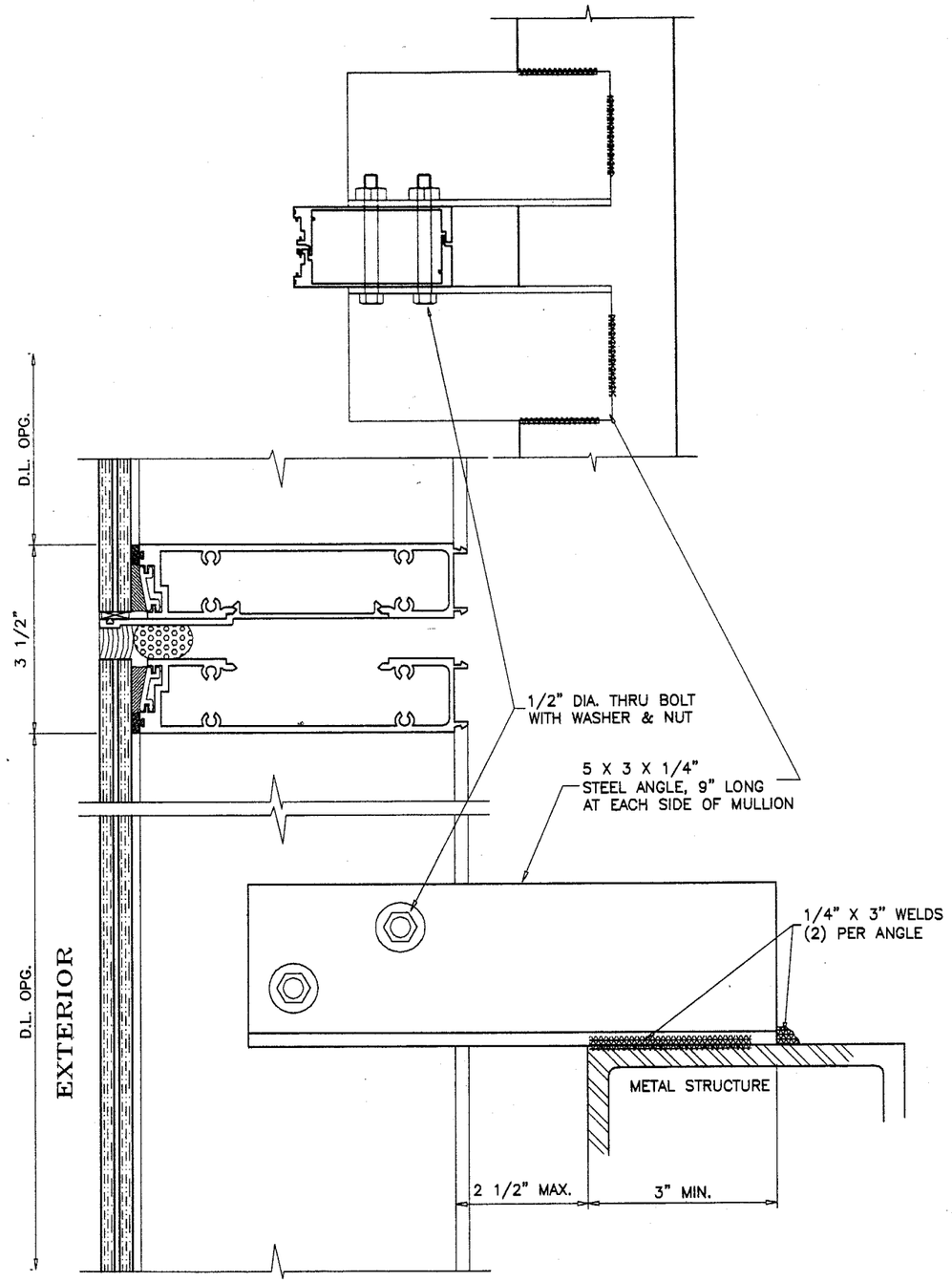

INTERMEDIATE ANCHORS
OPTION '3'

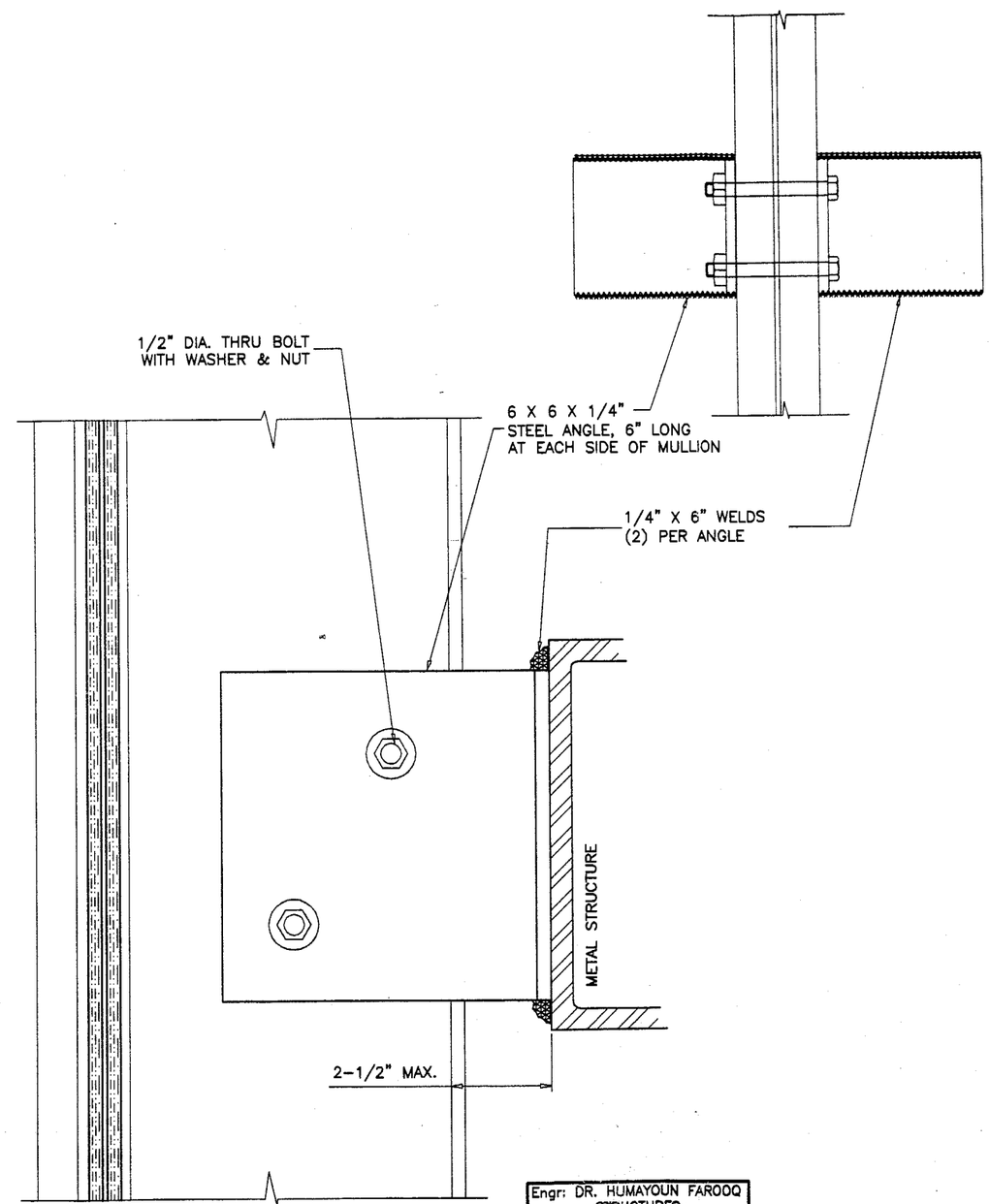

INTERMEDIATE ANCHORS
OPTION '4'

ANCHORS INTO METAL STRUCTURES
COMMERCIAL STEEL – 1/4" MIN. THICKNESS

Engr: DR. HUMAYOUN FAROOQ
STRUCTURES
FLA. PE # 16557
C.A.N. 3538
JUN 16 2003

Approved as complying with the
Florida Buiding Code
Date JULY 31, 2003
NOA# 03-0327.12
Miami Dade Product Control
Division
By

AL-FAROOQ CORPORATION
ENGINEERS, PLANNERS & PRODUCT DESIGN
1235 SW 87 AVE
MIAMI, FLORIDA 33174
TEL. (305) 264-8100 FAX. (305) 262-6978

STORE\W02-16AA

SERIES IBSS ALUM CURTAIN WALL SYSTEM

ARCH ALUMINUM & GLASS L.C.
10200 N.W. 67TH STREET
TAMARAC, FL. 33321
TEL. (800) 432-8132 FAX. (954) 724-9293

revisions:

no	date	by	description
A	04.29.03		REV. PER BCCO COMMENTS

date: 02-24-02
scale: 3/8" = 1"
dr. by: HAMID
chk. by:

drawing no.
W02-16

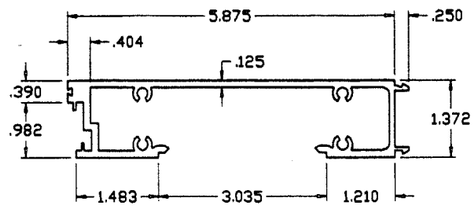

(2) FRAME HEAD/SILL/INTERMEDIATE

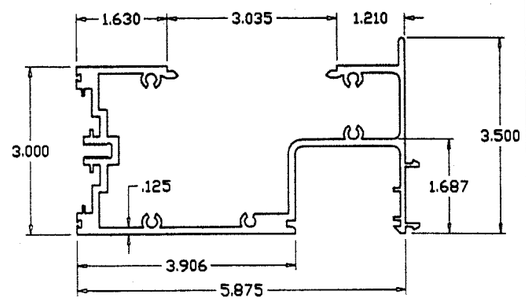

(5) HORIZONTAL

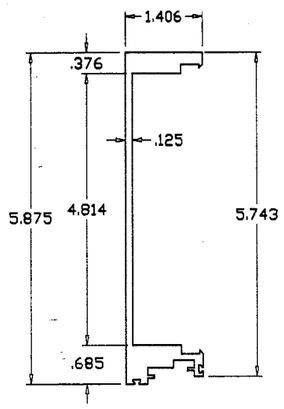

(4) FEMALE MULLION

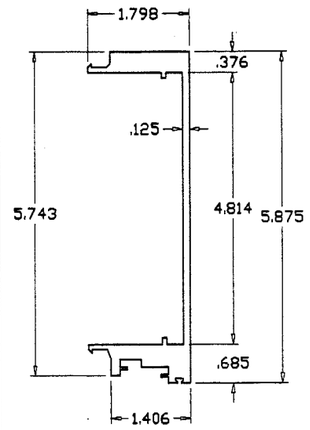

(3) MALE MULLION

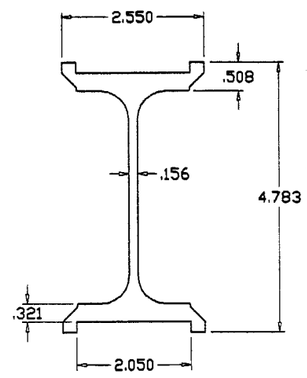

(8) SPLICE/REINFORCING

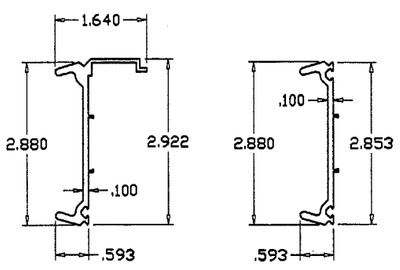

(7A) (7)

PRESSURE PLATES

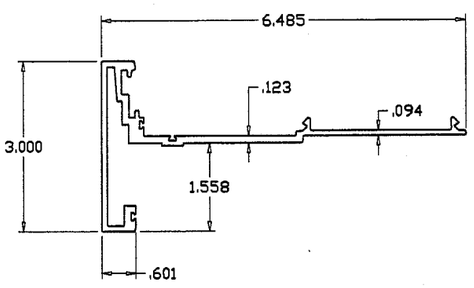

(17) SNAP-IN PRESSURE PLATE

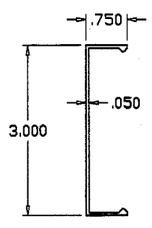

(18) PRESSURE PLATE COVER

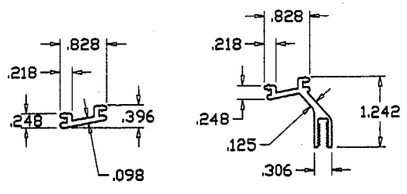

(6) (13)(15)

FILLER

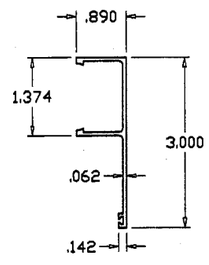

(19) INTERIOR COVER

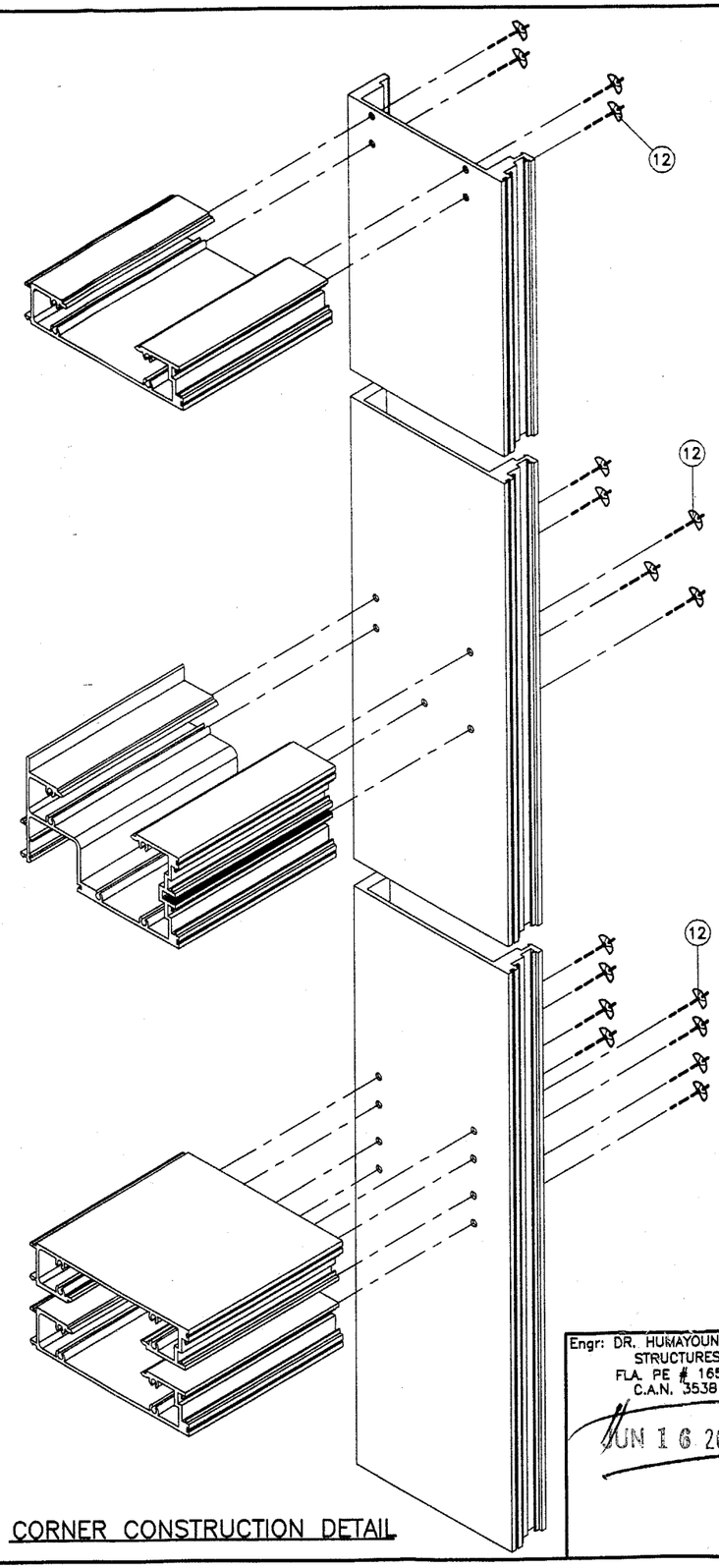

CORNER CONSTRUCTION DETAIL

Engr: DR. HUMAYOUN FAROOQ
STRUCTURES
FLA. PE # 16557
C.A.N. 3538

JUN 16 2003

Approved as complying with the Florida Buiding Code
Date JULY 31, 2003
NOA# 03-0327.12
Miami Dade Product Control Division
By Manuel Perez

AL-FAROOQ CORPORATION
ENGINEERS, PLANNERS & PRODUCT DESIGN
1235 SW 87 AVE
MIAMI, FLORIDA 33174
TEL. (305) 264-8100 FAX. (305) 262-6978

STORE\W02-16AA

SERIES IBSS ALUM CURTAIN WALL SYSTEM

ARCH ALUMINUM & GLASS L.C.
10200 N.W. 67TH STREET
TAMARAC, FL. 33321
TEL. (800) 432-8132 FAX. (954) 724-9293

revisions:

no	date	by	description
A	04.29.03		REV. PER BCCO COMMENTS

date: 02-24-02
scale: 3/8" = 1"
dr. by: HAMID
chk. by:

drawing no. W02-16

sheet 8 of 8