MIAMI-DADE

BUILDING CODE COMPLIANCE OFFICE (BCCO)
PRODUCT CONTROL DIVISION

MIAMI-DADE COUNTY, FLORIDA
METRO-DADE FLAGLER BUILDING
140 WEST FLAGLER STREET, SUITE 1603
MIAMI, FLORIDA 33130-1563
(305) 375-2901 FAX (305) 375-2908

# NOTICE OF ACCEPTANCE (NOA)

**Caradco Windows & Doors**
**201 Evans Rd**
**Pantoul, IL 61866**

**SCOPE:**
This NOA is being issued under the applicable rules and regulations governing the use of construction materials. The documentation submitted has been reviewed by Miami-Dade County Product Control Division and accepted by the Board of Rules and Appeals (BORA) to be used in Miami Dade County and other areas where allowed by the Authority Having Jurisdiction (AHJ).

This NOA shall not be valid after the expiration date stated below. The Miami-Dade County Product Control Division (In Miami Dade County) and/or the AHJ (in areas other than Miami Dade County) reserve the right to have this product or material tested for quality assurance purposes. If this product or material fails to perform in the accepted manner, the manufacturer will incur the expense of such testing and the AHJ may immediately revoke, modify, or suspend the use of such product or material within their jurisdiction. BORA reserves the right to revoke this acceptance, if it is determined by Miami-Dade County Product Control Division that this product or material fails to meet the requirements of the applicable building code.

This product is approved as described herein, and has been designed to comply with the High Velocity Hurricane Zone of the Florida Building Code.

**DESCRIPTION: Series "French View" Aluminum Clad Wood Sliding Glass Door**

**APPROVAL DOCUMENT:** Drawing No. **W03-16,** titled " 'French View' Sliding Glass Door", sheets 1 through 5 of 5, prepared by Al Farooq Corporation, dated 3/1/03, signed and sealed by Humayoun Farooq, P.E., bearing the Miami-Dade County Product Control Approval stamp with the Notice of Acceptance number and approval date by the Miami-Dade County Product Control Division.

**MISSILE IMPACT RATING: Large and Small Missile Impact**

**LABELING:** Each unit shall bear a permanent label with the manufacturer's name or logo, city, state and following statement: "Miami-Dade County Product Control Approved", unless otherwise noted herein.

**RENEWAL** of this NOA shall be considered after a renewal application has been filed and there has been no change in the applicable building code negatively affecting the performance of this product.

**TERMINATION** of this NOA will occur after the expiration date or if there has been a revision or change in the materials, use, and/or manufacture of the product or process. Misuse of this NOA as an endorsement of any product, for sales, advertising or any other purposes shall automatically terminate this NOA. Failure to comply with any section of this NOA shall be cause for termination and removal of NOA.

**ADVERTISEMENT:** The NOA number preceded by the words Miami-Dade County, Florida, and followed by the expiration date may be displayed in advertising literature. If any portion of the NOA is displayed, then it shall be done in its entirety.

**INSPECTION:** A copy of this entire NOA shall be provided to the user by the manufacturer or its distributors and shall be available for inspection at the job site at the request of the Building Official.
This NOA consists of this page 1 as well as approval document mentioned above.
The submitted documentation was reviewed by **Theodore Berman, P.E.**

5/30/2003

PRODUCT CONTROL ACCEPTED

**Caradco Windows & Doors**

## NOTICE OF ACCEPTANCE: EVIDENCE SUBMITTED

(For File ONLY. Not part of NOA)

**A. DRAWINGS**

1. Manufacturer's die drawings and sections.
2. Drawing No. **W03-16,** titled " 'French View' Sliding Glass Door", sheets 1 through 5 of 5, prepared by Al Farooq Corporation, dated 3/1/03, signed and sealed by Humayoun Farooq, P.E.

**B. TESTS**

1. Test reports on 1) Air Infiltration Test, per FBC, TAS 202-94
   2) Uniform Static Air Pressure Test, Loading per FBC, TAS 202-94
   3) Water Resistance Test, per FBC, TAS 202-94
   4) Large Missile Impact Test per FBC, TAS 201-94
   5) Cyclic Wind Pressure Loading per FBC, TAS 203-94
   6) Forced Entry Test, per FBC 2411 3.2.1 and TAS 202-94

   along with marked-up drawings and installation diagram of a single hung/fixed vinyl window, prepared by Twin City Testing Corporation, Test Report No. TCTCW101004 dated 12/14/01, signed and sealed by Derrick Swanson, P.E.

**C. CALCULATIONS**

1. Anchor Calculations and structural analysis, Al Farooq Corporation, dated 3/18/03, signed and sealed by Humayoun Farooq, P.E.

**D. MATERIAL CERTIFICATIONS**

1. Notice of Acceptance No. **03-0417.01** issued to Cardinal LG for "Cardinal Sea-Storm Type B" dated 5/15/03, expiring on 12/30/07.

**E. STATEMENTS**

1. None

**F. OTHER**

1. Letter from the consultant stating that the product is in compliance with the Florida Building Code (FBC)

**Theodore Berman, P.E.**
**Deputy Director, Product Control Division**
**NOA No 03-0401.03**
**Expiration Date: June 19, 2008**
**Approval Date: June 19, 2003**

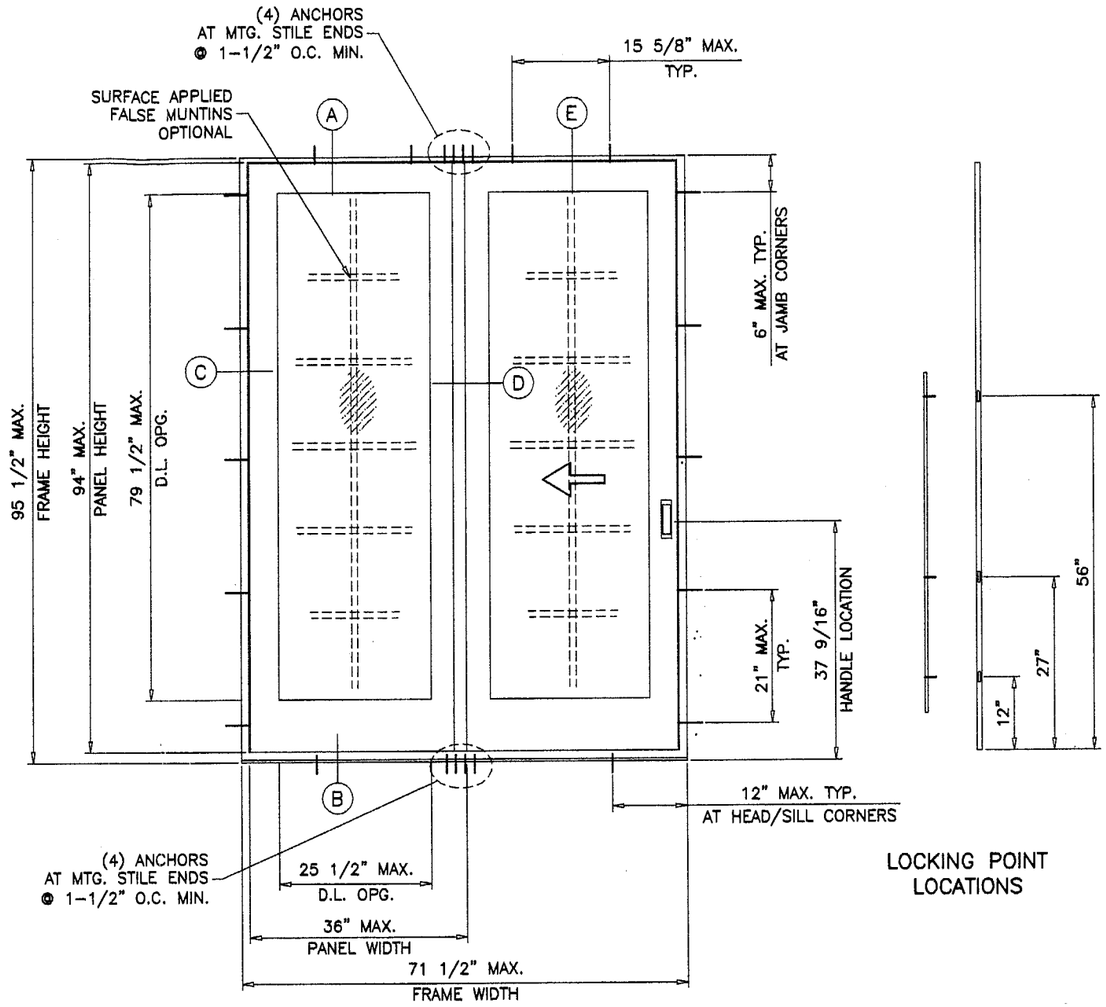


LOCKING POINT LOCATIONS

OX OR XO

OX SHOWN

TYPICAL ELEVATION

| DESIGN LOAD CAPACITY - PSF | | | |
|---|---|---|---|
| DOOR DIMS. | | ANN. GLASS | |
| WIDTH | HEIGHT | EXT. (+) | INT. (-) |
| 4'-11 1/2" | 6'-7 1/2" | 50.0 | 50.0 |
| 5'-11 1/2" | | 50.0 | 50.0 |
| 4'-11 1/2" | 6'-10 1/2" | 50.0 | 50.0 |
| 5'-11 1/2" | | 48.3 | 48.3 |
| 4'-11 1/2" | 7'-11 1/2" | 50.0 | 50.0 |
| 5'-11 1/2" | | 44.3 | 44.3 |

## 'FRENCH VIEW' SLIDING GLASS DOOR

DOORS WITH LAMINATED GLASS RATED FOR LARGE MISSILE IMPACT. SHUTTERS ARE NOT REQUIRED.

SEE CHART ABOVE FOR DESIGN LOAD RATING.

THIS PRODUCT IS DESIGNED TO COMPLY WITH THE HIGH VELOCITY HURRICANE ZONE OF THE 2001 FLORIDA BUILDING CODE.
ALSO FOR WIND LOADS AS PER ASCE 7-88. ASCE 7-93, ASCE 7-95 OR ASCE 7-98 AS REQUIRED BY PREVAILING BUILDING CODE.

WOOD BUCKS BY OTHERS, MUST BE ANCHORED PROPERLY TO TRANSFER LOADS TO THE STRUCTURE.

ANCHORS SHALL BE AS LISTED, SPACED AS SHOWN ON DETAILS. ANCHOR EMBEDMENT TO BASE MATERIAL SHALL BE BEYOND WALL DRESSING OR STUCCO.

ANCHORING OR LOADING CONDITIONS NOT SHOWN IN THESE DETAILS ARE NOT PART OF THIS APPROVAL.

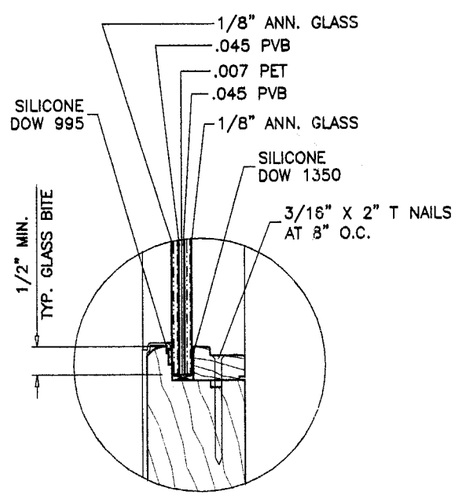


'SEA-STORM IMPACT GLASS'

**Approved as complying with the Florida Buiding Code**
**Date** 06/19/03
**NOA#** 03-0401.03
**Miami Dade Product Control Division**
**By:** [signature]

Engr: DR. HUMAYOUN FAROOQ
STRUCTURES
FLA. PE # 16557
C.A.N. 3538
MAR 18 2003


**AL-FAROOQ CORPORATION**
ENGINEERS, PLANNERS & PRODUCT DESIGN
1235 SW 87 AVE
MIAMI, FLORIDA 33174
TEL. (305) 264-8100 FAX. (305) 262-6978
COMP-ANL\W03-16CAR


'FRENCH VIEW' SLIDING GLASS DOOR


**CARADCO** WOOD WINDOWS & PATIO DOORS
201 EVANS ROAD
RANTOUL, ILLINOIS 61866
TEL. (217) 893-4444 FAX (217) 893-0921


| revisions: | | | |
|---|---|---|---|
| no | date | by | description |

date: 03-01-03
scale: 1/2"=1'-0"
dr. by: HAMID
chk. by:

drawing no.
W03-16

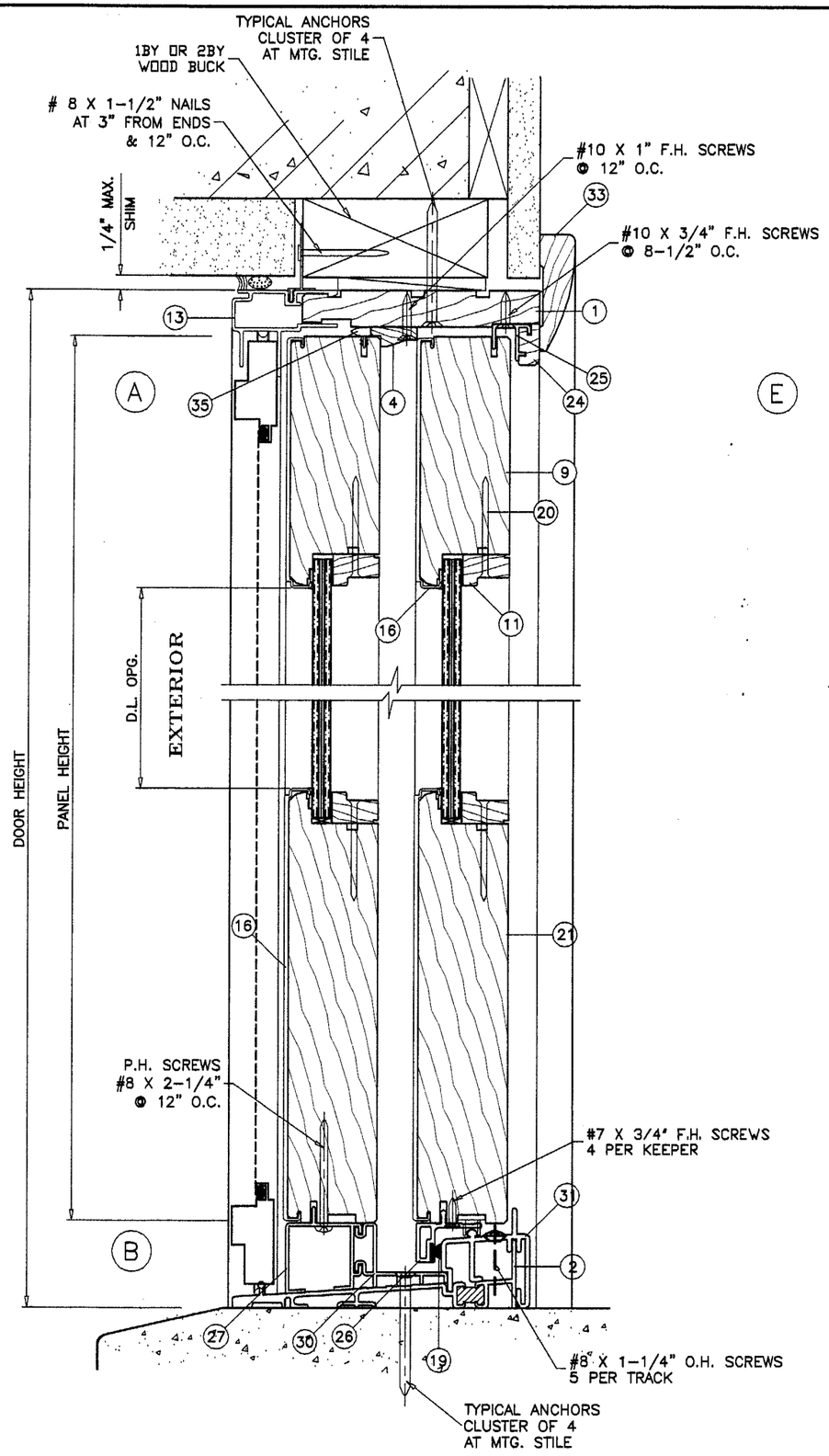


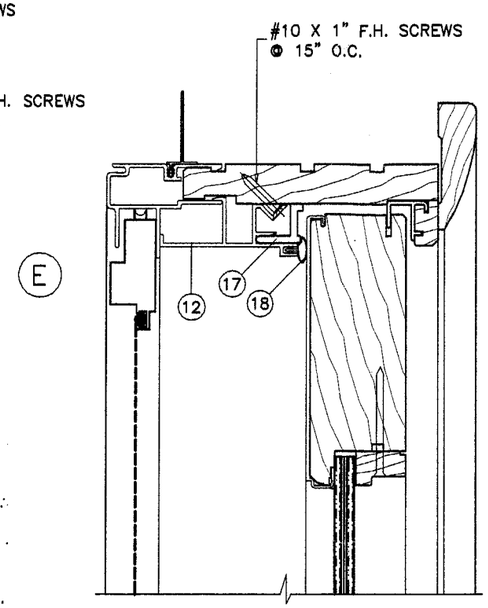


WOOD BUCKS NOT BY CARADCO, MUST SUSTAIN LOADS IMPOSED BY GLAZING SYSTEM AND TRANSFER THEM TO THE BUILDING STRUCTURE.

TYPICAL ANCHORS: SEE ELEV. FOR SPACING

3/16" TAPCONS

INTO 2BY WOOD BUCKS OR WOOD STRUCTURE
1-3/8" MIN. PENETRATION INTO WOOD

THRU 1BY WOOD BUCKS INTO MASONRY OR CONC.
1-1/4" MIN. EMBED INTO MASONRY OR CONC.

DIRECTLY INTO MASONRY OR CONC.
1-1/4" MIN. EMBED INTO MASONRY OR CONC.

SEALANT:

FRAME CORNERS SEALED WITH BUTYL TAPE SEALANT.
BUTYL CAULK USED BETWEEN WOOD/ALUMINUM JOINTS

LOCK:

ASHLAND (MULTI-POINT) CLAW TYPE SNAP LOCK AT ACTIVE PANEL LOCK STILE 36" FROM BOTTOM.
ASHLAND (MULTI-POINT) KEEPER AT FRAME JAMB.

Approved as complying with the Florida Buiding Code
Date 06/19/03
NOA# 03-0401.03
Miami Dade Product Control Division
By Theodore Bonner

Engr: DR. HUMAYOUN FAROOQ
STRUCTURES
FLA. PE # 16557
C.A.N. 3538
MAR 18 2003

AL-FAROOQ CORPORATION
ENGINEERS, PLANNERS & PRODUCT DESIGN
1235 SW 87 AVE
MIAMI, FLORIDA 33174
TEL. (305) 264-8100 FAX. (305) 262-6978

COMP-ANL\W03-16CAR

'FRENCH VIEW' SLIDING GLASS DOOR

CARADCO WOOD WINDOWS & PATIO DOORS
201 EVANS ROAD
RANTOUL, ILLINOIS 61866
TEL. (217) 893-4444 FAX (217) 893-0921

| revisions: | | | |
|---|---|---|---|
| no | date | by | description |

date: 03-01-03
scale: 3/8" = 1"
dr. by: HAMID
chk. by:

drawing no.
W03-16

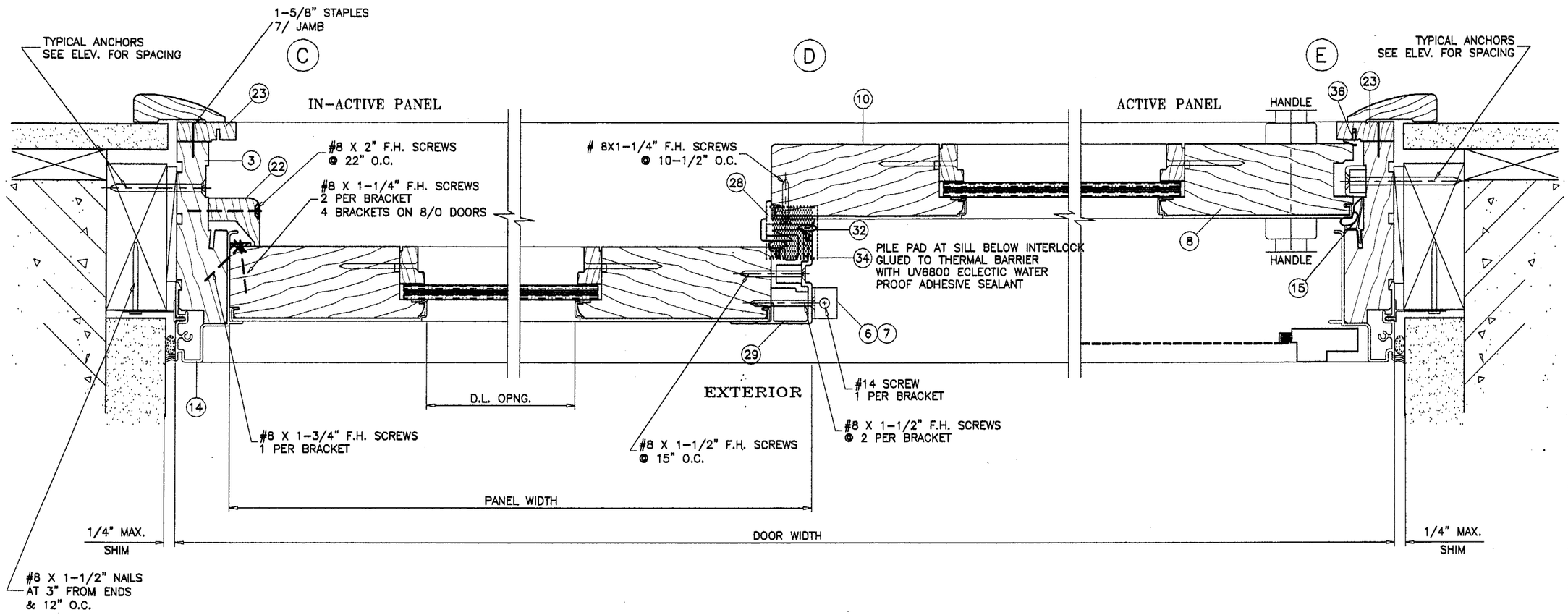


Approved as complying with the
Florida Buiding Code
Date 06/19/03
NOA# 03-0901.03
Miami Dade Product Control
Division
By Caroline Barnes

Engr: DR. HUMAYOUN FAROOQ
STRUCTURES
FLA. PE # 16557
C.A.N. 3538

MAR 18 2003


AL-FAROOQ CORPORATION
ENGINEERS, PLANNERS & PRODUCT DESIGN
1235 SW 87 AVE
MIAMI, FLORIDA 33174
TEL. (305) 264-8100 FAX. (305) 262-6978
COMP-ANL\W03-16CAR


'FRENCH VIEW' SLIDING GLASS DOOR

CARADCO WOOD WINDOWS & PATIO DOORS
201 EVANS ROAD
RANTOUL, ILLINOIS 61866
TEL. (217) 893-4444 FAX (217) 893-0921

| revisions: | | | |
|---|---|---|---|
| no | date | by | description |

date: 03-01-03
scale: 3/8" = 1"
dr. by: HAMID
chk. by:

drawing no.
W03-16

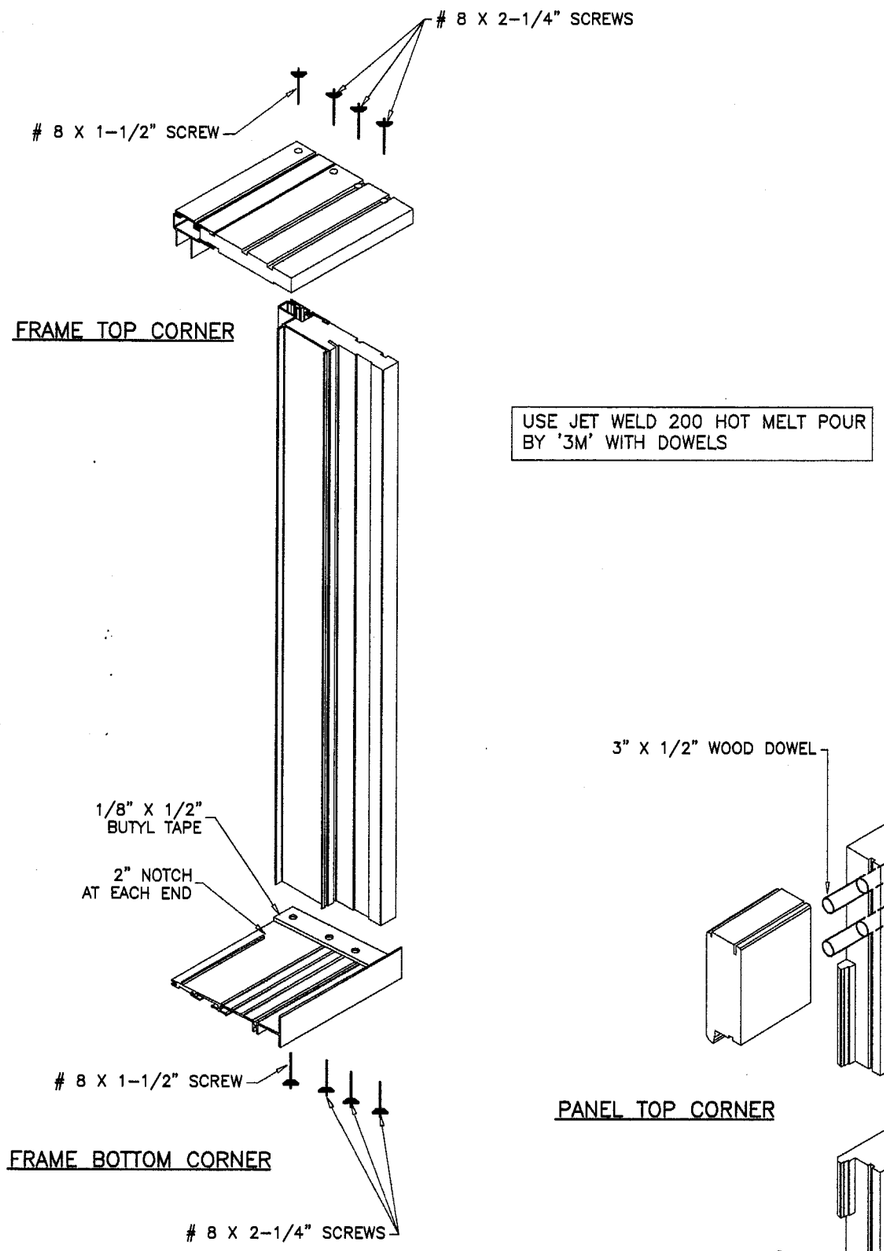


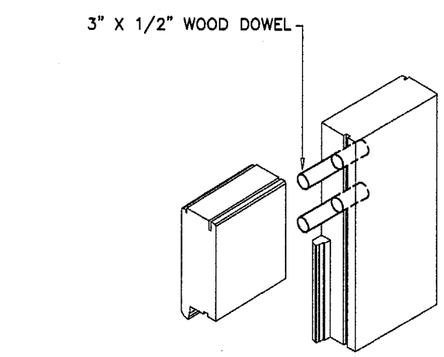


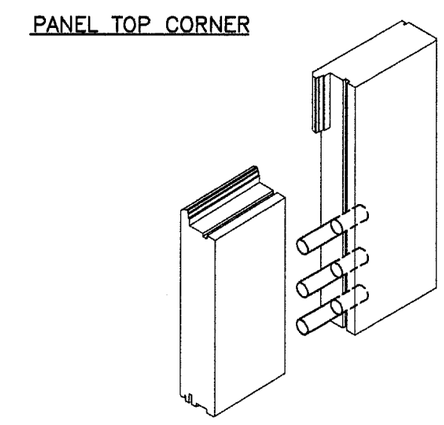


| ITEM NO. | PART # | QTY. | DESCRIPTION | MATERIAL | MANF./SUPPLIER/REMARKS |
|---|---|---|---|---|---|
| 1 | SM-05 | 1 | FRAME HEAD | WOOD | CARADCO |
| 2 | 21818 | 1 | FRAME SILL | 6063-T5 | – |
| 3 | SM-04 | 2 | FRAME JAMB | WOOD | CARADCO |
| 4 | – | 1 | FIXED PANEL HEAD STOP | WOOD | CARADCO |
| 5 | – | – | – | – | – |
| 6 | MSP385A | 1 | FIX. PANEL HEAD BRACKET | STEEL | – |
| 7 | MSP364B | 1 | FIX. PANEL SILL BRACKET | 6063-T5 | – |
| 8 | MD-04 | 1 | LOCK STILE | WOOD | CARADCO |
| 9 | – | 1/ PANEL | TOP RAIL | WOOD | CARADCO |
| 10 | MD-17 | 1/ PANEL | OPER. INTERLOCK STILE | WOOD | CARADCO |
| 11 | – | AS REQD. | GLASS STOP | WOOD | CARADCO |
| 12 | MSP375A | 1 | HEAD FILLER EXTRUSION | 6063-T5 | |
| 13 | MSP374 | 1 | HEAD EXTRUSION | 6063-T5 | |
| 14 | MSP373 | 2 | JAMB EXTRUSION | 6063-T5 | |
| 15 | MSP372 | AS REQD. | DOOR WEATHERSTRIP | – | – |
| 16 | – | AS REQD. | EXTRUDED ALUMINUM CLADDING | ALUMINUM | – |
| 17 | MSP354A | – | VINYL HEAD CLOSURE | – | – |
| 18 | S90-078 | AS REQD. | PANEL WEATHERSTRIP | FLEXIBLE VINYL | |
| 19 | MSP371 | AS REQD. | WEATHERSTRIP | – | PILE WITH CENTER FIN |
| 20 | – | AS REQD. | 3/16" X 2" 'T' NAILS | STEEL | AT 8" O.C. |
| 21 | MD-16 | 1/ PANEL | OPER. BOTTOM RAIL | WOOD | CARADCO |
| 22 | – | 1 | FIXED PANEL SIDE STOP | WOOD | CARADCO |
| 23 | – | 1/ PANEL | SIDE LINER STOP | WOOD | CARADCO |
| 24 | – | 1 | HEAD LINER STOP | WOOD | CARADCO |
| 25 | MSP361 | 1 | OPER. PANEL HEAD TRACK | RIGID PVC | |
| 26 | MFD030 | AS REQD. | OPER. PANEL W'STRIP KEEPER | RIGID PVC | |
| 27 | – | 1 | FIXED PANEL SILL SUPPORT | 6063-T5 | |
| 28 | Q3660 | – | OPERATING PANEL INTERLOCK | RIGID PVC | |
| 28A | P94-006 | – | FIXED PANEL INTERLOCK | RIGID PVC | |
| 29 | P94-005 | 1 | METAL INTERLOCK | 6063-T5 | |
| 30 | MSP369A | 1 | THERMAL BARRIER | RIGID PVC | |
| 31 | MSP370A | 1 | OPERATING PANEL SILL TRACK | RIGID PVC | |
| 32 | – | AS REQD. | FLEXIBLE BULB WEATHERSTRIP | – | .312 DIA. BULB |
| 33 | – | – | – | – | – |
| 34 | 86-071B | 1 | PILE DUST PAD (1-1/4"X 1-1/4"X 5/16") | – | – |
| 35 | PP-004A | AS REQD. | FOAM FILLED BULB VINYL | – | – |
| 36 | – | AS REQD. | SINGLE LEAF W'STRIPPING | RIGID VINYL | |

Approved as complying with the Florida Buiding Code
Date 06/19/03
NOA# 03-0401.03
Miami Dade Product Control Division
By [illegible]

Engr: DR. HUMAYOUN FAROOQ
STRUCTURES
FLA. PE # 16557
C.A.N. 3538

MAR 18 2003

AL-FAROOQ CORPORATION
ENGINEERS, PLANNERS & PRODUCT DESIGN
1235 SW 87 AVE
MIAMI, FLORIDA 33174
TEL. (305) 264-8100 FAX. (305) 262-6978

COMP-ANL\W03-16CAR

'FRENCH VIEW' SLIDING GLASS DOOR

CARADCO WOOD WINDOWS & PATIO DOORS
201 EVANS ROAD
RANTOUL, ILLINOIS 61866
TEL. (217) 893-4444 FAX (217) 893-0921

revisions:

| no | date | by | description |
|---|---|---|---|
| | | | |

date: 03-01-03
scale: 3/8" = 1"
dr. by: HAMID
chk. by:

drawing no.
W03-16

sheet 4 of 5

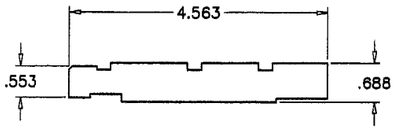


FRAME HEAD
SM-05
WOOD

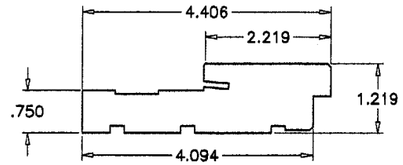


SIDE JAMB
SM-04
WOOD

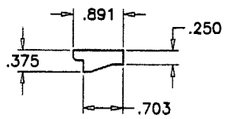


FIXED PANEL HEAD STOP
–
WOOD

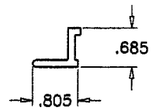


HEAD CLOSURE
MSP354A
VINYL-GEON 85857 OR EQUIV.

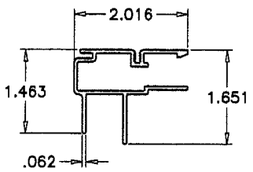


HEAD FRAME EXTRUSION
MSP374
6063-T5

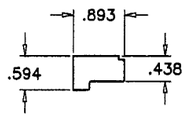


GLASS STOP
OM-01
WOOD

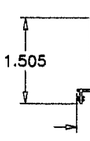


NAILING FIN
OM-
–

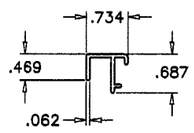


ACTIVE PANEL HEAD TRACK
MSP361
RIGID PVC-GEON 85857 OR EQUIV.

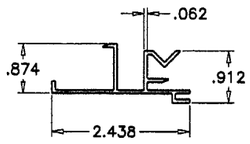


HEAD FILLER EXTRUSION
MSP375A
6063-T5

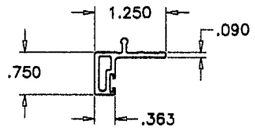


BOTTOM W'STRIP KEEPER
MFD030
RIGID PVC-GEON 85857 OR EQUIV.

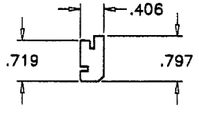


HEAD LINER STOP
SM-01
WOOD

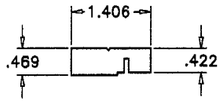


SIDE LINER STOP
SM-02
WOOD

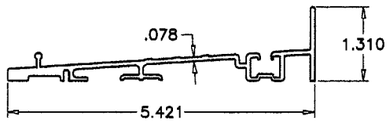


SILL
21818
6063-T5

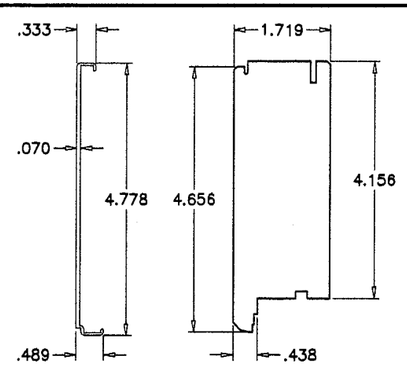


CLADDING
MFD001
6060-T5

TOP RAIL
–
WOOD

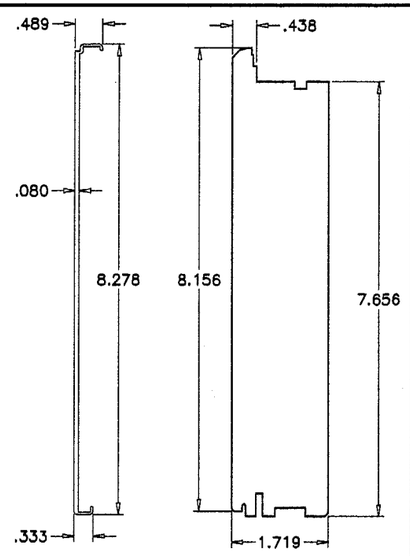


CLADDING
MFD002
6060-T5

BOTTOM RAIL
MD-16
WOOD

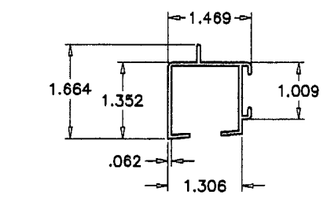


FIXED PANEL SILL SUPPORT
–
6063-T5

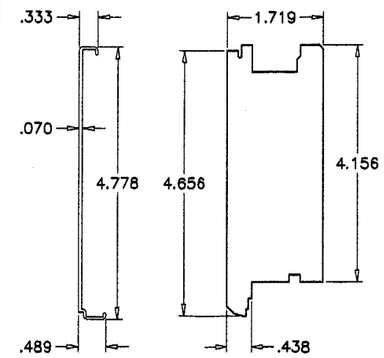


CLADDING
MFD001
6060-T5

LOCK STILE
MD-04
WOOD

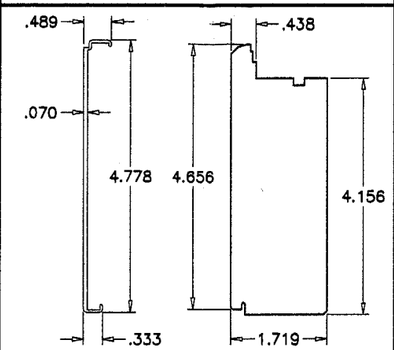


CLADDING
MFD001
6060-T5

OPER. INTERLOCK STILE
MD-17
WOOD

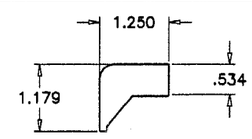


FIXED PANEL SIDE STOP
SM-03
WOOD

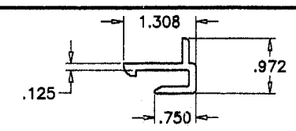


SLIDING VINYL INTERLOCK
Q3660
RIGID PVC

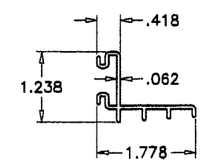


THERMAL BARRIER
MSP369A
RIGID PVC-GEON 85857 OR EQUIV.

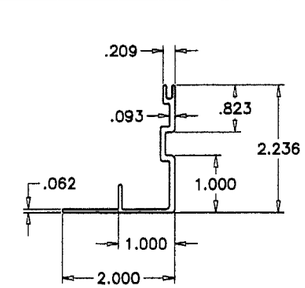


FIXED ALUMINUM INTERLOCK
P94-005
6063-T5

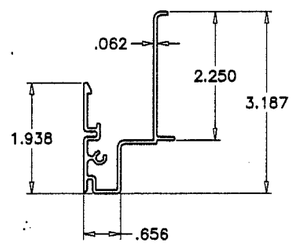


SIDE FRAME EXTRUSION
MSP373
6063-T5

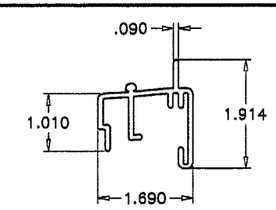


OPERATING PANEL SILL TRACK
MSP370A
EXTRUDED POLYCARBONATE

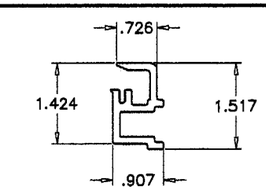


FIXED VINYL INTERLOCK
P94-006
RIGID PVC

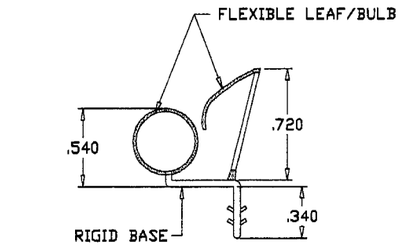


DOOR W'STRIP
MSP372
PVC

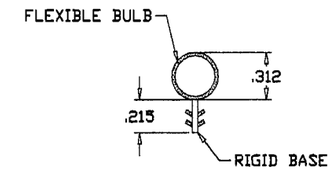


BULB W'STRIP
S90-078
PVC

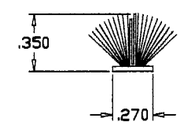


PILE W'STRIP WITH CENTER FIN
MSP371
–

SCALE 1:1

TYPICAL WOOD-PONDEROSA PINE

Approved as complying with the Florida Building Code
Date 06/19/03
NOA# 03-0401.03
Miami Dade Product Control Division
By [illegible]

Engr: DR. HUMAYOUN FAROOQ
STRUCTURES
FLA. PE # 16557
C.A.N. 3538

MAR 18 2003

AL-FAROOQ CORPORATION
ENGINEERS, PLANNERS & PRODUCT DESIGN
1235 SW 87 AVE
MIAMI, FLORIDA 33174
TEL. (305) 264-8100 FAX. (305) 262-6978

COMP-ANL\W03-16CAR

'FRENCH VIEW' SLIDING GLASS DOOR

CARADCO WOOD WINDOWS & PATIO DOORS
201 EVANS ROAD
RANTOUL, ILLINOIS 61866
TEL. (217) 893-4444 FAX (217) 893-0921

| revisions: | | | |
|---|---|---|---|
| no | date | by | description |

date: 03-01-03
scale: 3/8" = 1"
dr. by: HAMID
chk. by:

drawing no.
W03-16

sheet 5 of 5