MIAMI-DADE

BUILDING CODE COMPLIANCE OFFICE (BCCO)
PRODUCT CONTROL DIVISION

MIAMI-DADE COUNTY, FLORIDA
METRO-DADE FLAGLER BUILDING
140 WEST FLAGLER STREET, SUITE 1603
MIAMI, FLORIDA 33130-1563
(305) 375-2901 FAX (305) 375-2908

NOTICE OF ACCEPTANCE (NOA)

Brunswick Door Company
400 Goolsby Boulevard
Deerfield Beach, FL 33442

SCOPE:
This NOA is being issued under the applicable rules and regulations governing the use of construction materials. The documentation submitted has been reviewed by Miami-Dade County Product Control Division and accepted by the Board of Rules and Appeals (BORA) to be used in Miami Dade County and other areas where allowed by the Authority Having Jurisdiction (AHJ).

This NOA shall not be valid after the expiration date stated below. The Miami-Dade County Product Control Division (In Miami Dade County) and/or the AHJ (in areas other than Miami Dade County) reserve the right to have this product or material tested for quality assurance purposes. If this product or material fails to perform in the accepted manner, the manufacturer will incur the expense of such testing and the AHJ may immediately revoke, modify, or suspend the use of such product or material within their jurisdiction. BORA reserves the right to revoke this acceptance, if it is determined by Miami-Dade County Product Control Division that this product or material fails to meet the requirements of the applicable building code.

This product is approved as described herein, and has been designed to comply with the High Velocity Hurricane Zone of the Florida Building Code.

DESCRIPTION: 20 ga. Flush Outswing Commercial Steel Door (w/16g frame)-Impact

APPROVAL DOCUMENT: Drawing No. **122-99**, titled "20ga Flush Steel Door", sheets 1 through 6 of 6, prepared by EngCo, Inc., dated 9/8/99 and last revised on 4/4/00, signed and sealed by Pedro De Figueiredo, P.E., bearing the Miami-Dade County Product Control Renewal stamp with the Notice of Acceptance number and expiration date by the Miami-Dade County Product Control Division.

MISSILE IMPACT RATING: Large and Small Missile Impact

LABELING: Each unit shall bear a permanent label with the manufacturer's name or logo, city, state and following statement: "Miami-Dade County Product Control Approved", unless otherwise noted herein.

RENEWAL of this NOA shall be considered after a renewal application has been filed and there has been no change in the applicable building code negatively affecting the performance of this product.

TERMINATION of this NOA will occur after the expiration date or if there has been a revision or change in the materials, use, and/or manufacture of the product or process. Misuse of this NOA as an endorsement of any product, for sales, advertising or any other purposes shall automatically terminate this NOA. Failure to comply with any section of this NOA shall be cause for termination and removal of NOA.

ADVERTISEMENT: The NOA number preceded by the words Miami-Dade County, Florida, and followed by the expiration date may be displayed in advertising literature. If any portion of the NOA is displayed, then it shall be done in its entirety.

INSPECTION: A copy of this entire NOA shall be provided to the user by the manufacturer or its distributors and shall be available for inspection at the job site at the request of the Building Official.
This NOA **renews NOA # 99-0920.05** and, consists of this page 1 as well as approval document mentioned above.
The submitted documentation was reviewed by **Ishaq I. Chanda, P.E.**

4/24/13

PRODUCT CONTROL ACCEPTED

Brunswick Door Company

NOTICE OF ACCEPTANCE: EVIDENCE SUBMITTED

(For File ONLY. Not part of NOA)

A. DRAWINGS ***(Submitted under NOA#99-0920.05)***

1. Manufacturer's die drawings and sections.
2. Drawing No. **122-99**, titled "20ga Flush Steel Door", sheets 1 through 6 of 6, prepared by EngCo, Inc., dated 9/8/99 and last revised on 4/4/00, signed and sealed by Pedro De Figueiredo, P.E .

B. TESTS ***(Submitted under NOA#99-0920.05)***

1. Test reports on 1) Air Infiltration Test, per FBC, TAS 202-94
   2) Uniform Static Air Pressure Test, Loading per FBC, TAS 202-94
   3) Water Resistance Test, per FBC, TAS 202-94
   4) Large Missile Impact Test per FBC, TAS 201-94
   5) Cyclic Wind Pressure Loading per FBC, TAS 203-94
   6) Forced Entry Test, per FBC 2411 3.2.1 and TAS 202-94

   along with installation diagram and manufacturer's design drawing marked-up and verified by the Laboratory prepared by Hurricane Engineering & Testing Inc., Test Report No. **HETI-99-1143** and **HETI-99-812**, dated May 20th, 1999 and May 25th, 199 respectively, signed and sealed by Hector M. Medina, P.E.
2. Test reports on 1) Large Missile Impact Test per FBC, TAS 201-94
   2)Uniform Static Air Pressure Test, Loading per FBC, TAS 202-94
   3) Cyclic Wind Pressure Loading per FBC, TAS 203-94

   along with installation diagram and manufacturer's design drawing marked-up and verified by the Laboratory prepared by Hurricane Engineering & Testing Inc., Test Report No. **HETI-99-826,** dated August 4th, 199 and revised and reissued on January 17, 2000 & **HETI-99-829** dtd August 9th, 1999, signed & sealed by Hector M. Medina, P.E.

C. CALCULATIONS ***(Submitted under NOA#99-0920.05)***

1. Anchor calculations prepared by Eng Co, Inc., dated 09/08/99 and revised on 03-22-00, signed and sealed by Pedro De Figueiredo, P.E.

D. MATERIAL CERTIFICATIONS ***(Submitted under NOA#99-0920.05)***

1. Tensile Test prepared by Hurricane Engineering & Testing Inc., Report No. HETI-99-T163 dated 06-09-1999 for steel samples, tested per ASTM E8-96, signed & sealed by Hector M. Medina, P.E.

E. STATEMENTS ***(Submitted under NOA#99-0920.05)***

1. Request for renewal dated April 15, 2003, issued by Brunswick signed by Alex Guizinski.
2. Stateman letter of conformance and "no financial interest", dated September 10, 1999, signed by Pedro De Figueiredo, P.E.
3. Statement letter of compliance (per test report) dated May 20th, May 25th, August 4th, August 9th, 1999 issued by Hurricane Engineering & Testing Inc., signed & sealed by Hector M. Medina, P.E.
4. Addendum letter to test report dated 01-17-00, issued by Hurricane Engineering & Testing Inc, signed and sealed by Hector M. Medina, P.E.
5. Photo copy of statement letter, **private Label agreement** between Brunswick Door Co, Inc. and North American Door Co. dated June 11th, 1997,signed by Alex Guzinski of (president Brunswick) and Antonio Gervasi of (president North American Door Corp). Original in file # **95-1212.01,**

F. OTHER

1. NOA No. **99-0920.05** issued to Brunswick Door Co., expiring on 4/28/03.
2. Test proposal approved by BCCO dated 06-30-1999.
3. Private Label agreement between Brunswick and North American Door Co.

Ishaq I. Chanda

Ishaq I. Chanda, P.E.
Product Control Examiner
NOA No 03-0401.06
Expiration Date: April 28, 2008
Approval Date: May 15, 2003

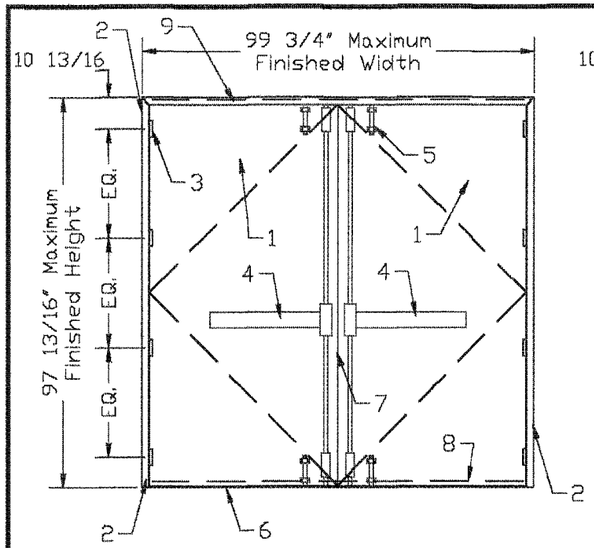

PAIR DOOR
DESIGN PRESSURE:
Positive= +60
Negative= -65

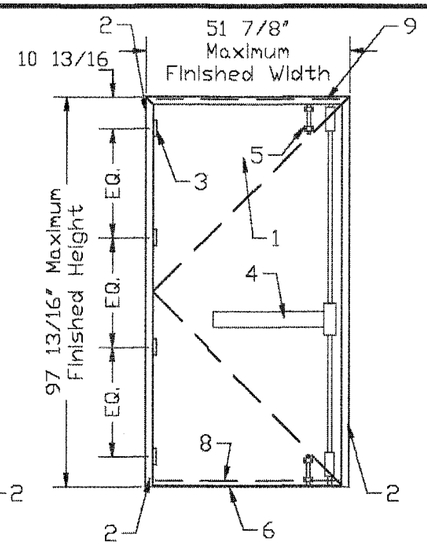

SINGLE DOOR
DESIGN PRESSURE:
Positive= +60
Negative= -65

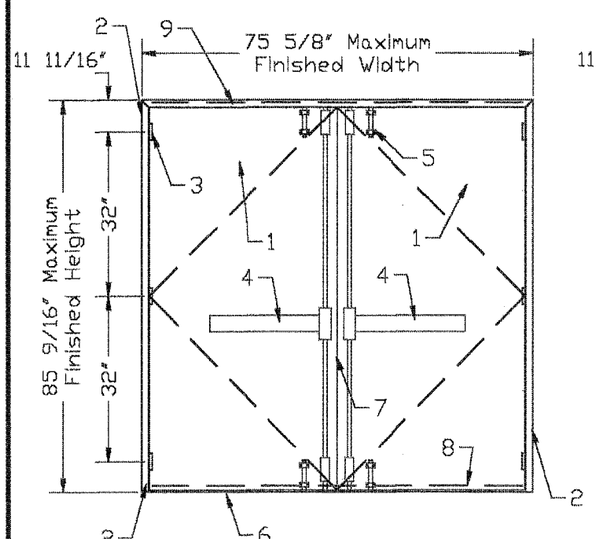

PAIR DOOR
DESIGN PRESSURE:
Positive= +60
Negative= -85

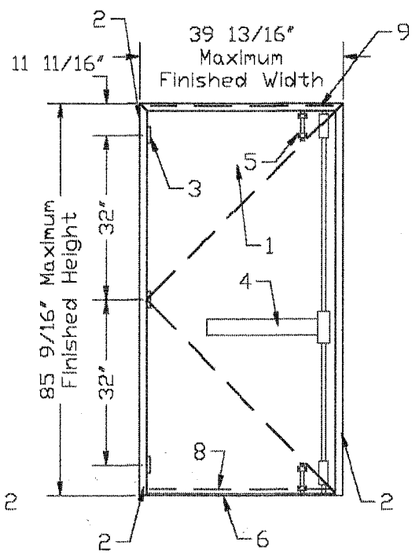

SINGLE DOOR
DESIGN PRESSURE:
Positive= +60
Negative= -85

GENERAL NOTES:

1- CODE: This product has been tested and designed in accordance with the South Florida Building Code – Dade County 94 edition.

2- DEFINITION: This product is an 20 ga.(min) Out-Swing Commercial Single or Double Steel Door, designed and erected to provide protection from Hurricane force winds within the designed allowable pressures and limitations stated in this approval.

3- IDENTIFICATION: A permanent legible decal shall be placed at readily visible location at inside the frame jamb and at the door slab edge, reading the following:

Brunswick Door Company
Deerfield Beach, Florida
Dade County Product
Control Approved

4- MATERIAL: 16ga Frame and 20ga Door flush or embossed are made of cold rolled steel, commercial quality with a minimum yield stress of 44.0 Ksi.

5- FASTENERS: Assembly screws and anchors shall be as specified at current set of drawings. Installation and loads as per manufacturer specifications.

6- SEALANTS: GE Window & Door 100% silicone Rubber Sealant #GE012A to be applied on frame perimeter, exterior side and leaf perimeter.

HARDWARE SCHEDULE

MARK	DESCRIPTION
1	20 Ga 1 3/4" – 47 5/8"x 95 1/8" Steel door leaf. Flush or Embossed
2	16 Ga 2 5/8"x 5 7/8"(min) Steel Frame – Jambs and Header
3	(8) for FH=97 7/8" and (6) for FH=85 1/2" Steel Full Mortise Hinges, 4 1/2"x 4 1/2" PBB, Inc – Part# PB81 – US 26D finish.
4	(2) PRIMARY LOCKS – Panic Device Cal Royal Products Inc. # 8000V series connected to the active and inactive doors.
5	(4) SECONDARY LOCKS – Taco Model # UL-453 HD surface bolts two per door leaf top and bottom.
6	Pemko 177AV Saddle Threshold – 7/8" highx 5" wide with a 1/4" SiliconeSeal insert.
7	(2) Pemko overlapping astragal #357 1 3/4"x1/8" USP.
8	Pemko #307AV sweep
9	Pemko #346C x 100" AL rain cap.

INDEX

SHEET	DESCRIPTION
1	GENERAL NOTES, HARDWARE SCHEDULE AND DESIGN PRESSURE
2	PERIMETER FRAME DETAIL
3	DOOR DETAIL
4	ELEVATION ANCHORAGE LAY-OUT
5	ANCHORAGE SECTION DETAIL
6	WEATHER SEAL DETAILS

PRODUCT RENEWED
as complying with the Florida
Building Code
Acceptance No. 03-0401.06
Expiration Date APRIL 28, 2008
By Ishaq I. Chanda
Miami Dade Product Control
Division

APPROVED AS COMPLYING WITH THE
SOUTH FLORIDA BUILDING CODE
DATE April 28, 2000
BY Ishaq I. Chanda
PRODUCT CONTROL DIVISION
BUILDING CODE COMPLIANCE OFFICE
ACCEPTANCE NO. 99-0920.05

EngCo, Inc.
Engineering Services
CA# 8116
9957 NW 7th St.
Plantation - Florida - 33324
Tel.: 954 424-4064

MAR 22 2000
Pedro De Figueiredo
PE 52809

20ga Flush Steel Door

BRUNSWICK DOOR CO.
400 South Goolsby Blvd.
Deerfield Bch. - Florida - 33443
Tel.: 954 427-1700

Date: 9/8/99 | Scale: none | Designed by: PPMF

Rev. #	Description	Date
1	Add single door, Change Notes, 16ga frame	3/21/00

SHEET 1 of 6

Drawing Number 122-99

CORNER ASSEMBLY

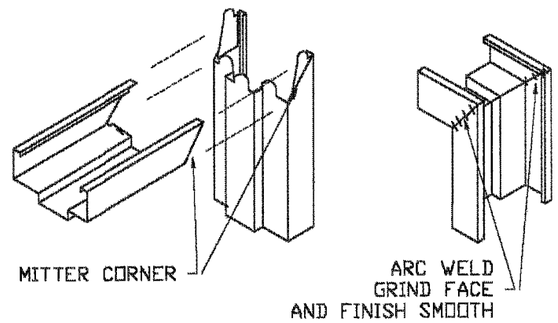

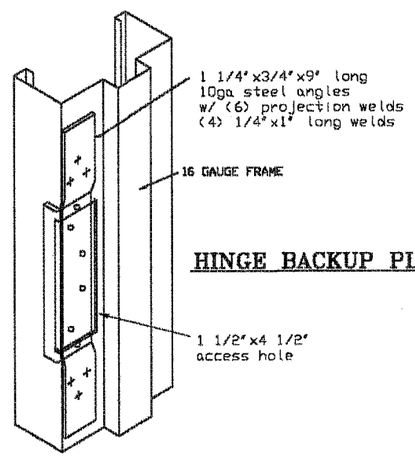

HINGE BACKUP PLATE

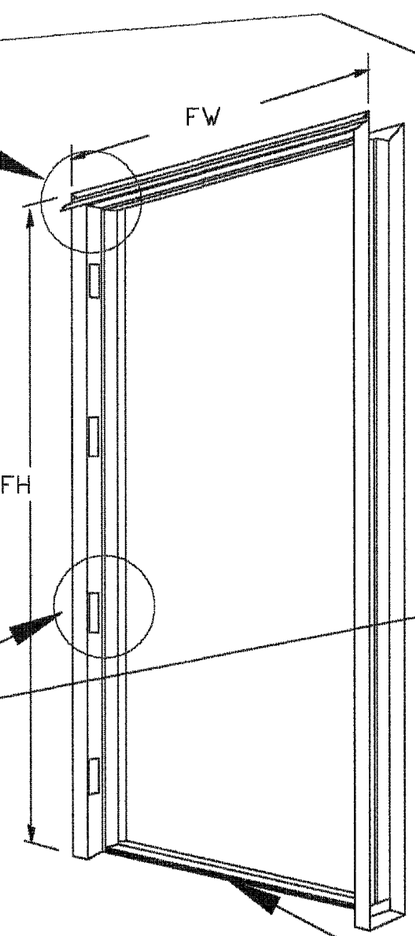

PERIMETER FRAME - SINGLE DOOR

16 Ga Commercial Quality
Cold Rolled Steel
Fy=44 Ksi

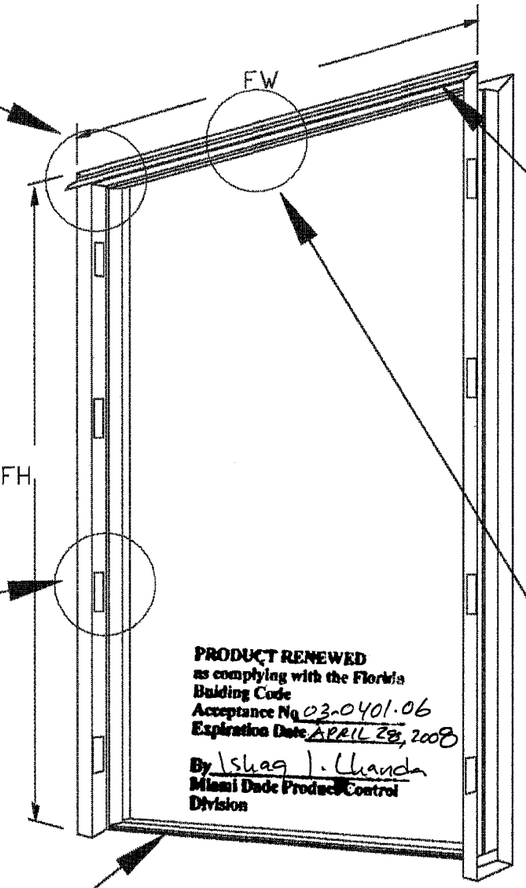

PEMKO 177AV THRESHOLD

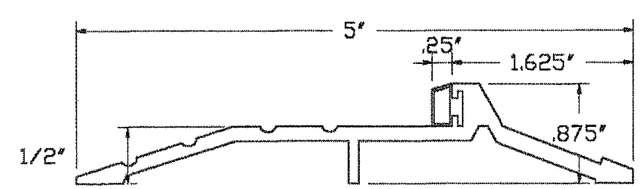

PERIMETER FRAME - DOUBLE DOOR

16 Ga Commercial Quality
Cold Rolled Steel
Fy=44 Ksi

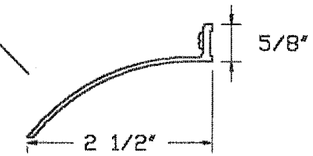

OVERHEAD RAIN DRIP

Pemko #346C-AL

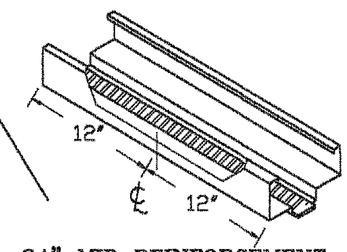

24" MID REINFORCEMENT

1 3/8"x24"x1/8" steel
reinforcement plate welded to
frame with (7) 3/16" point weld.

PRODUCT RENEWED
as complying with the Florida
Building Code
Acceptance No. 03-0401.06
Expiration Date APRIL 28, 2008
By Ishaq I. Chanda
Miami Dade Product Control
Division

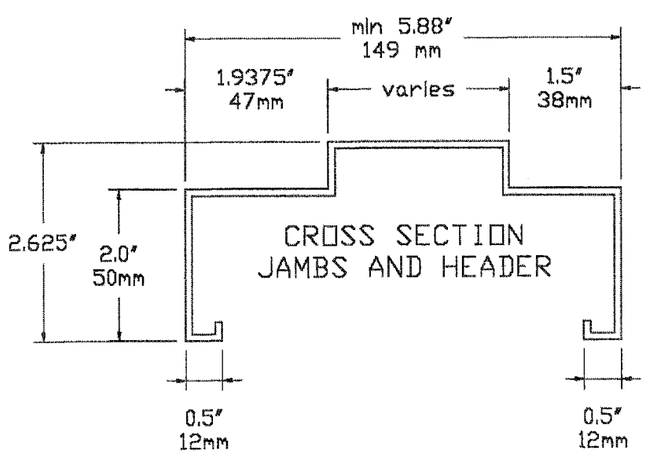

APPROVED AS COMPLYING WITH THE
SOUTH FLORIDA BUILDING CODE
DATE April 28, 2000
BY Ishaq I. Chanda
PRODUCT CONTROL DIVISION
BUILDING CODE COMPLIANCE OFFICE
ACCEPTANCE NO. 99-0920.05

EngCo, Inc.
Engineering Services
CA# 6116
9957 NW 7th St.
Plantation - Florida - 33324
Tel.: 954 424-4064

MAR 2 2 2000
Pedro De Figueiredo
PE 52809

20ga Flush Steel Door

BRUNSWICK DOOR CO.
400 South Goolsby Blvd.
Deerfield Bch. - Florida - 33443
Tel.: 954 427-1700

Date: 9/6/99 | Scale: none | Designed by: PPMF

Rev. #	Description	Date
1	Replace 18ga with 16ga frame - per code	3/21/00

SHEET 2 of 6

Drawing Number 122-99

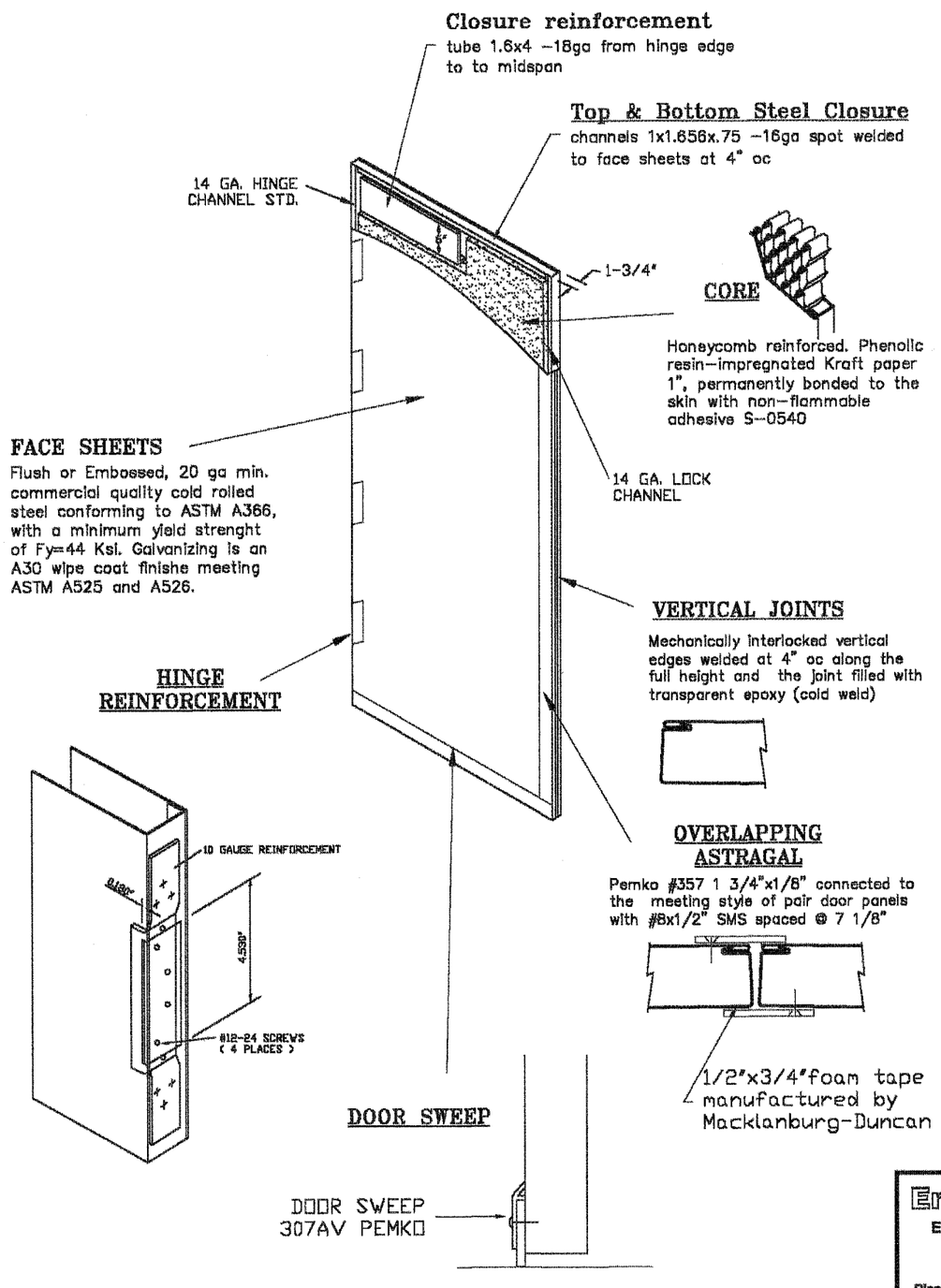

TYPICAL REINFORCEMENTS

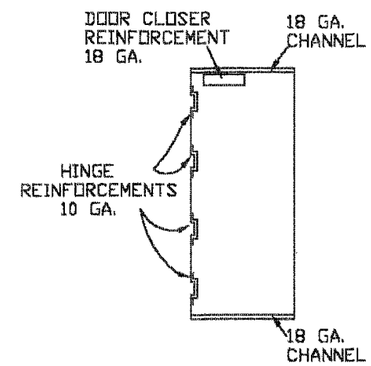

OPTIONAL STIFFENERS

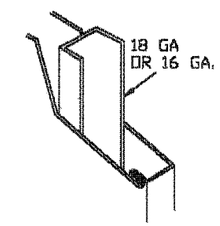

PRODUCT RENEWED
as complying with the Florida Building Code
Acceptance No. 03-0401.06
Expiration Date APRIL 28, 2008
By Ishaq I. Chanda
Miami Dade Product Control Division

APPROVED AS COMPLYING WITH THE SOUTH FLORIDA BUILDING CODE
DATE April 28, 2000
BY Ishaq I. Chanda
PRODUCT CONTROL DIVISION
BUILDING CODE COMPLIANCE OFFICE
ACCEPTANCE NO. 99-0920.05

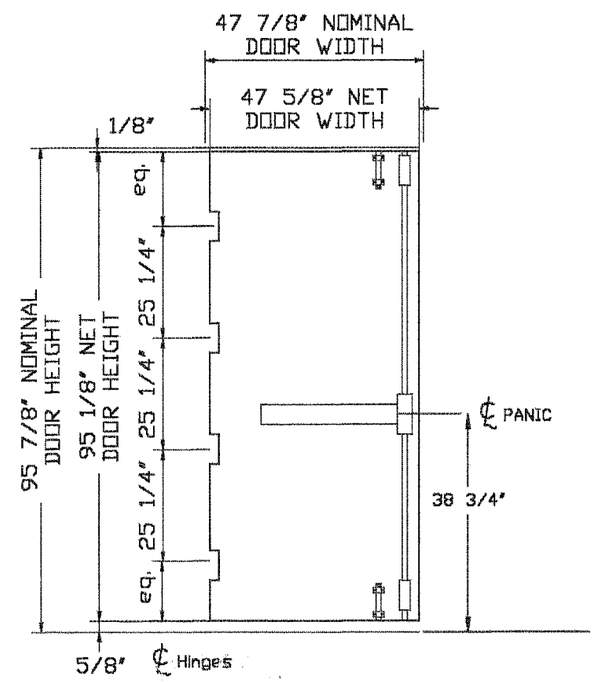

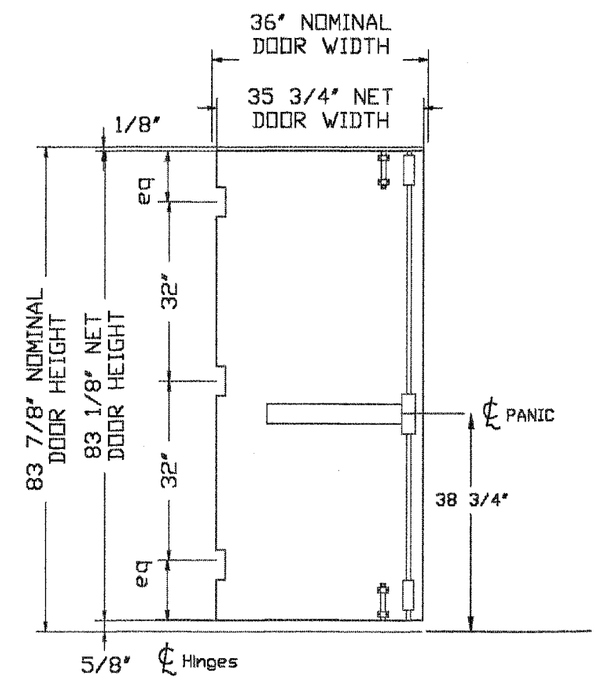

EngCo, Inc.
Engineering Services
CAB 8118
9957 NW 7th St.
Plantation - Florida - 33324
Tel.: 954 424-4064

MAR 2 2 2000
Pedro De Figueiredo
PE 52809

20ga Flush Steel Door

BRUNSWICK DOOR CO.
400 South Goolsby Blvd.
Deerfield Bch. - Florida - 33443
Tel.: 954 427-1700

Date: 9/8/99 | Scale: none | Designed by: PPMF

Rev. #	Description	Date
1	Deleted additional reinforcements	3/21/00

SHEET 3 of 6

Drawing Number 122–99

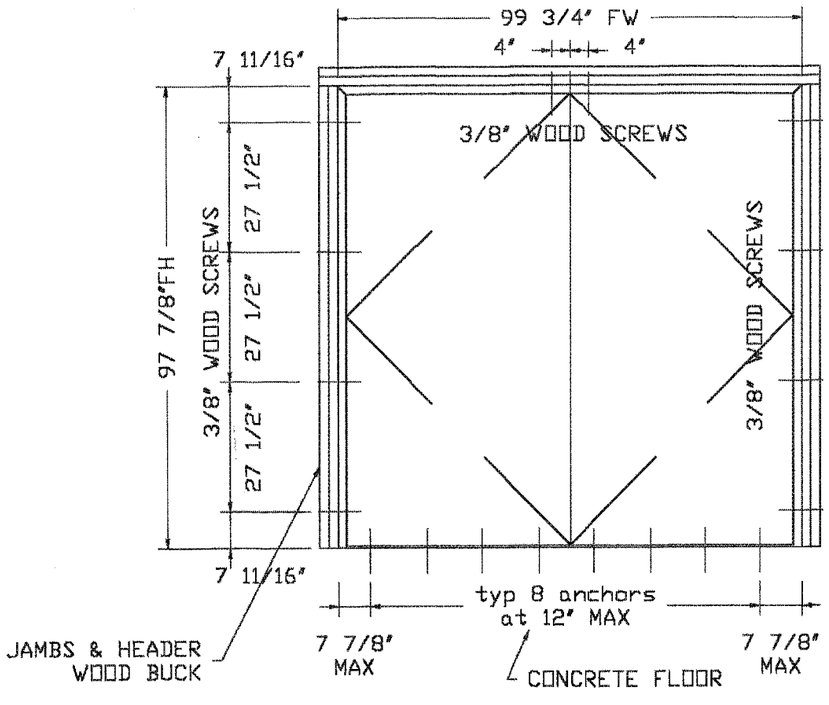

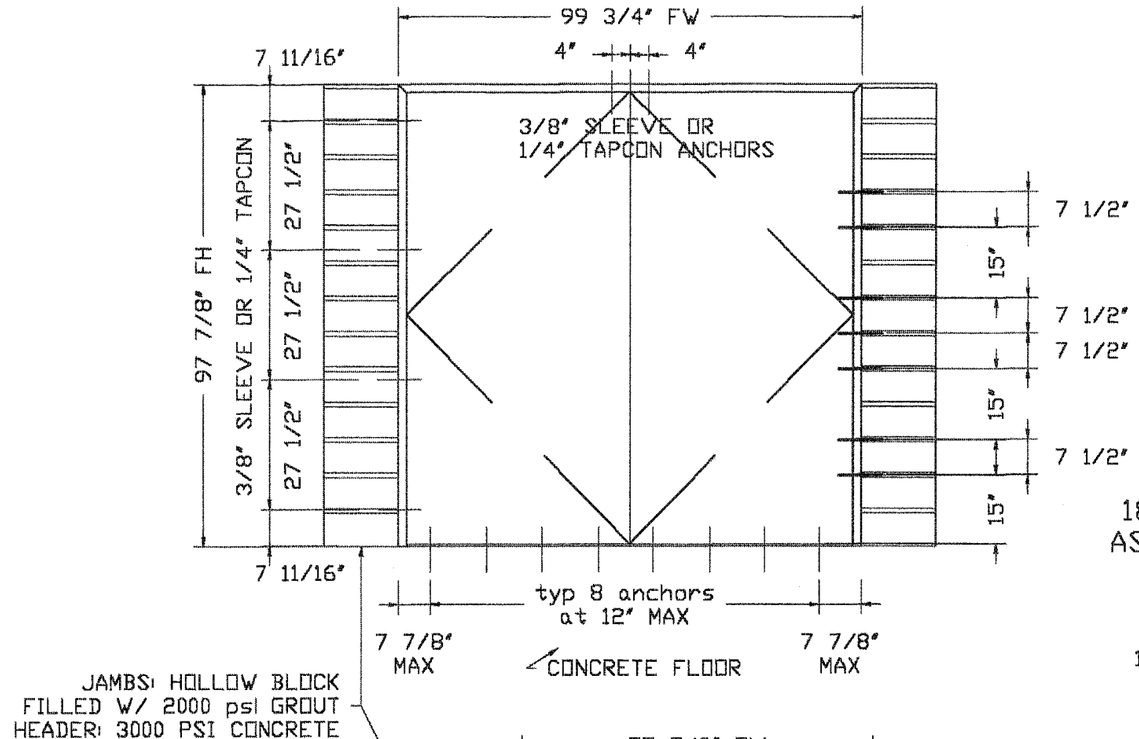

PRODUCT RENEWED
as complying with the Florida
Building Code
Acceptance No. 03-0401.06
Expiration Date APRIL 28, 2008
By Ishaq I. Chanda
Miami Dade Product Control
Division

APPROVED AS COMPLYING WITH THE
SOUTH FLORIDA BUILDING CODE
DATE April 28, 2000
BY Ishaq I. Chanda
PRODUCT CONTROL DIVISION
BUILDING CODE COMPLIANCE OFFICE
ACCEPTANCE NO. 99-0920.05

18GA STEEL "T" ANCHOR
ASTM A366 - FY=44 KSI

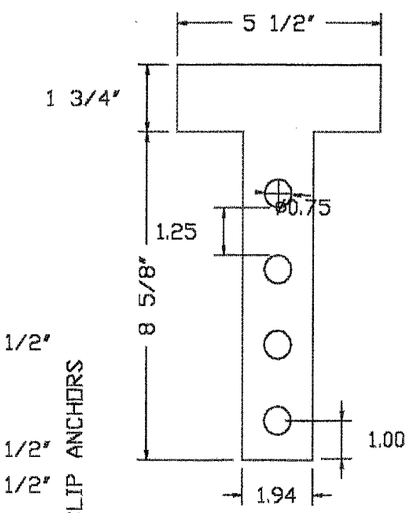

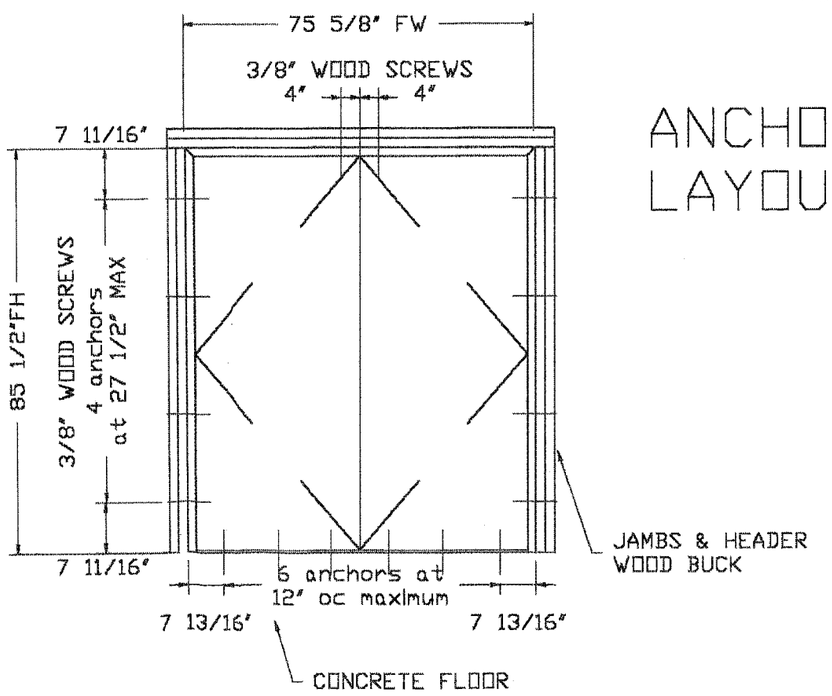

ANCHORAGE LAYOUT

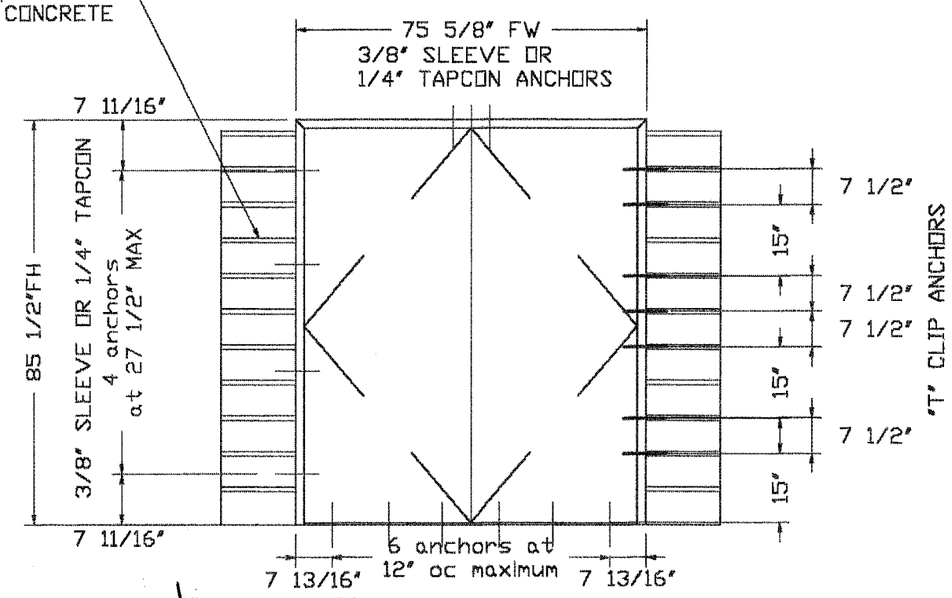

EngCo, Inc.
Engineering Services
APR 04 2000
Pedro De Figueiredo
PE 52600

20ga Flush Steel Door

BRUNSWICK DOOR CO.
400 South Goolsby Blvd.
Deerfield Bch. - Florida - 33443
Tel.: 954 427-1700

Date: 9/8/99 | Scale: none | Designed by: PPMF

Rev. #	Description	Date
1	Anchorage spacing adjusted	3/21/00
1	Anchorage spacing adjusted	4/4/00

SHEET
4 of 6

Drawing Number
122-99

HEADER ANCHORAGE
3/8" WOOD SCREWS

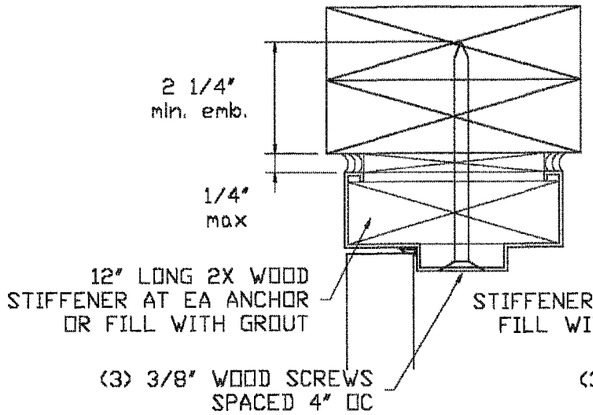

HEADER ANCHORAGE
1/4" TAPCONS

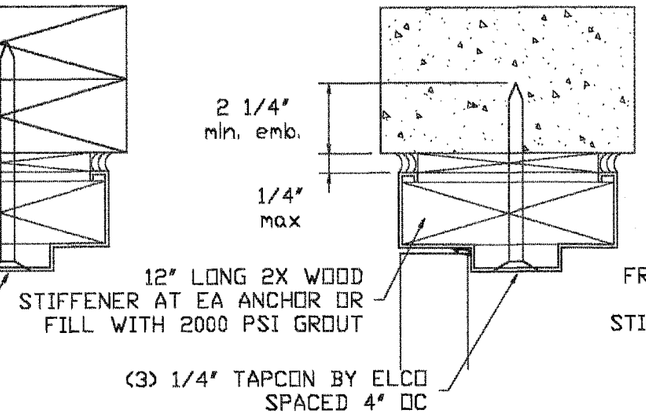

HEADER ANCHORAGE
3/8" HILTI SLEEVE ANCHORS

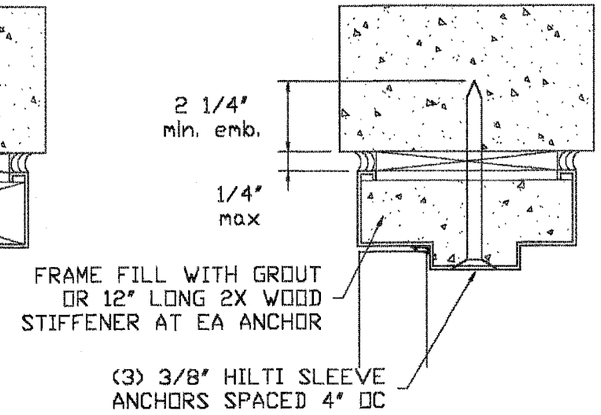

JAMB ANCHORAGE
3/8" HILTI SLEEVE ANCHORS

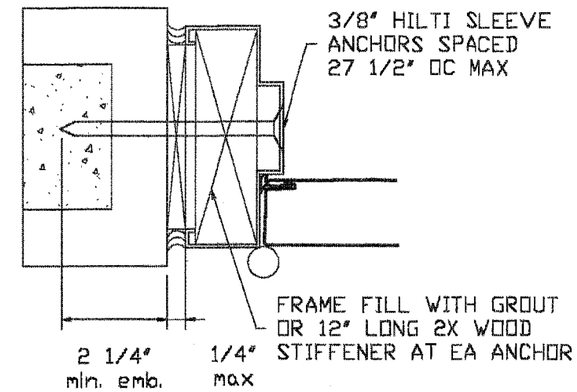

NOTE: Attachments of sub-bucks shall be designed by the Architect of Record or Engineer of Record and must be in compliance with the South Florida Building Code

JAMB ANCHORAGE
3/8" WOOD SCREWS

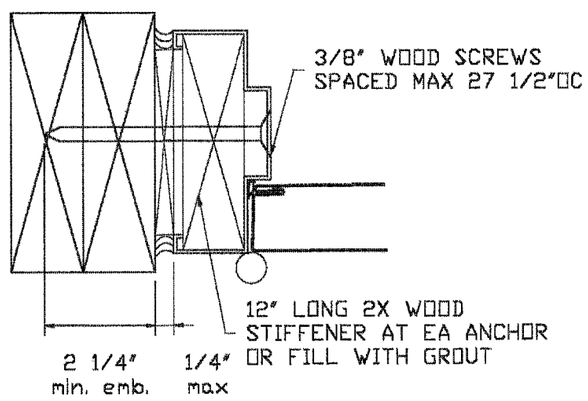

JAMB ANCHORAGE
1/4" TAPCON ANCHORS

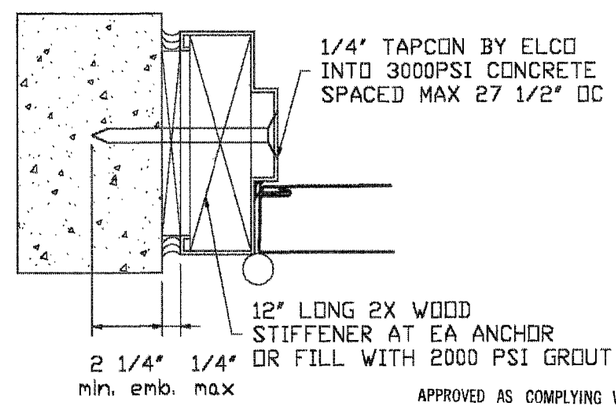

JAMB ANCHORAGE
"T" ANCHORS

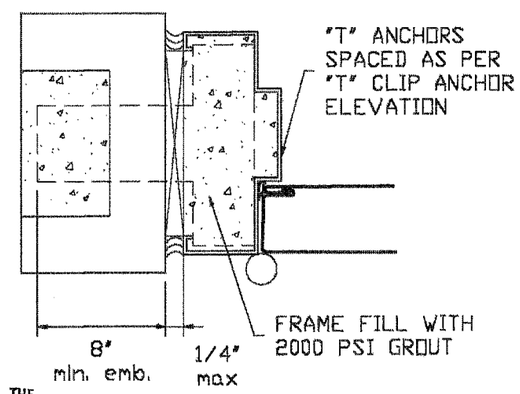

THRESHOLD ANCHORAGE
1/4" TAPCONS SCREWS

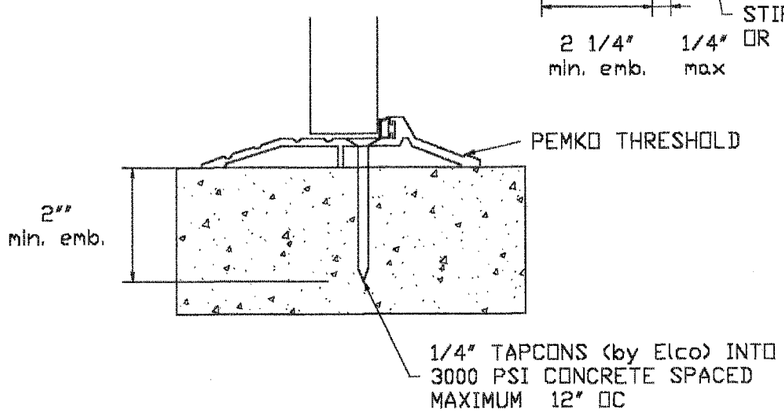

APPROVED AS COMPLYING WITH THE SOUTH FLORIDA BUILDING CODE
DATE April 28, 2000
BY Ishaq I. Chanda
PRODUCT CONTROL DIVISION
BUILDING CODE COMPLIANCE OFFICE
ACCEPTANCE NO. 99-0920.05

PRODUCT RENEWED
as complying with the Florida Building Code
Acceptance No 03-0401.06
Expiration Date APRIL 28, 2008
By Ishaq I. Chanda
Miami Dade Product Control Division

EngCo, Inc.
Engineering Services

MAR 2 2 2000
Pedro De Figueiredo
PE 52809

20ga Flush Steel Door

BRUNSWICK DOOR CO.
400 South Goolsby Blvd.
Deerfield Bch. - Florida - 33443
Tel.: 954 427-1700

Date: 9/8/99	Scale: none	Designed by: PPMF

Rev. #	Description	Date
1	ANCHORAGE EMBEDMENT	3/21/00

SHEET
5 of 6

Drawing Number
122-99

WEATHER STRIPPING

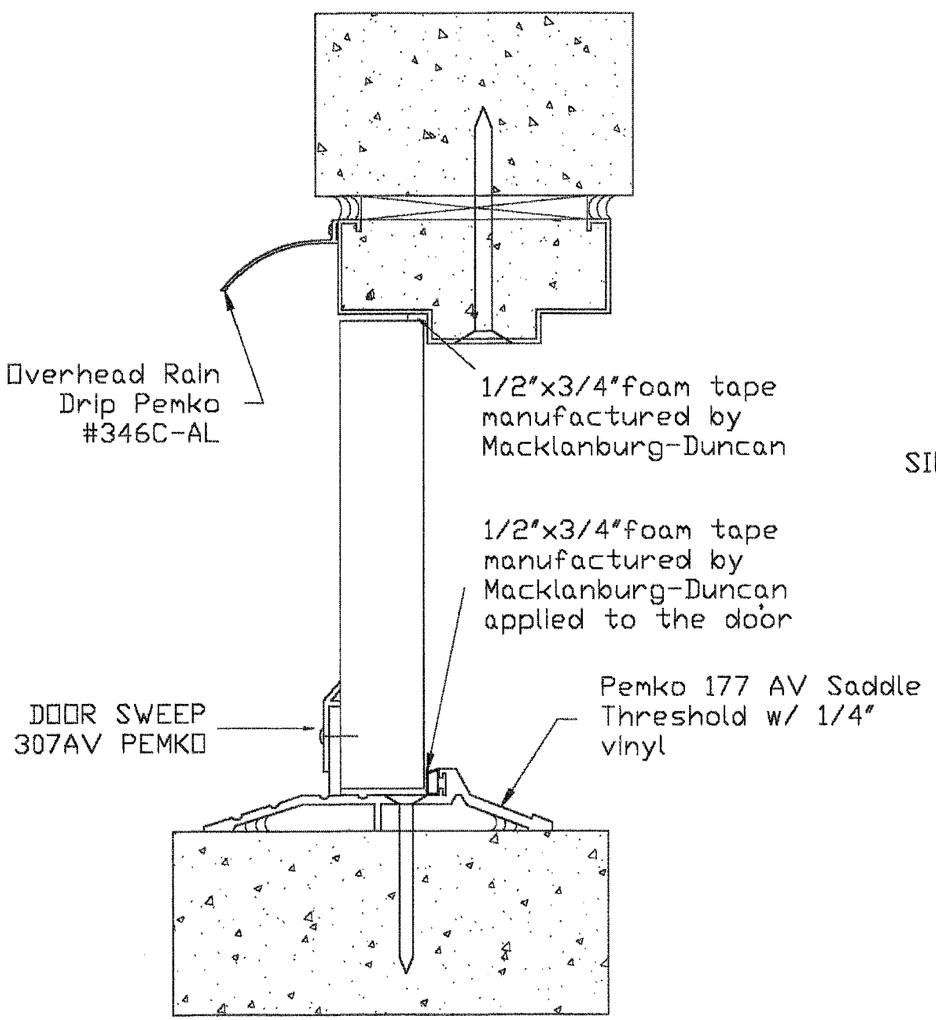

VERTICAL SECTION

HORIZONTAL SECTION

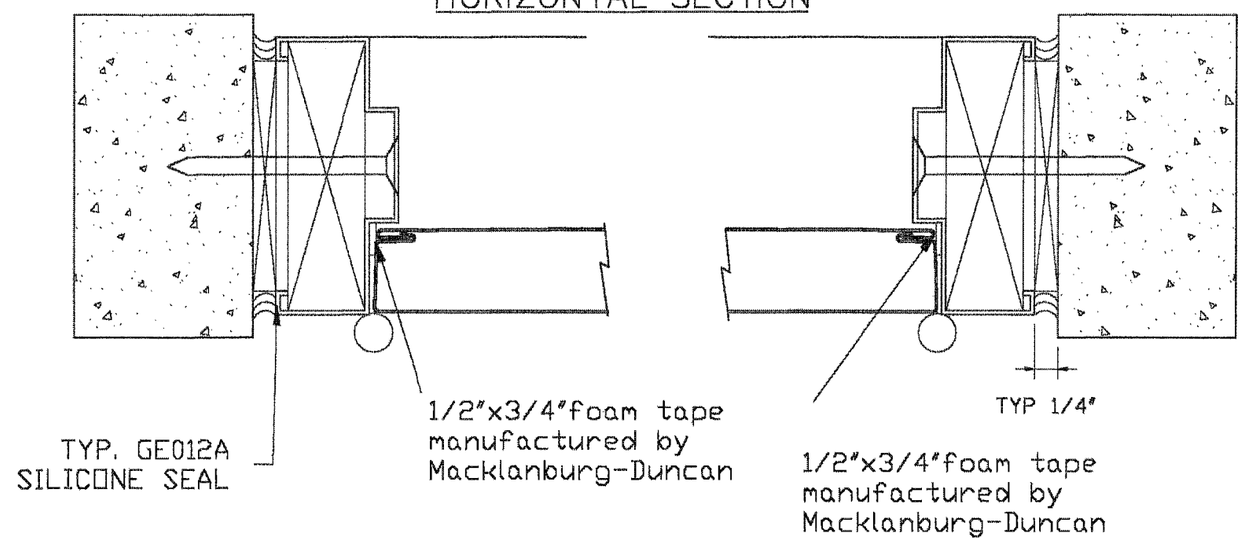

MEETING STILE

Pemko #357 1 3/4"x1/8" connected to the meeting style of pair door panels with #8x1/2" SMS spaced @ 7 1/8"

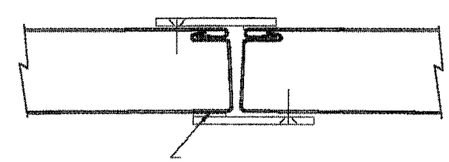

1/2"x3/4"foam tape
manufactured by
Macklanburg-Duncan
double on interior,
single on exterior

PRODUCT RENEWED
as complying with the Florida Building Code
Acceptance No. 03-0401.06
Expiration Date APRIL 28, 2008
By Ishag I. Chanda
Miami Dade Product Control Division

APPROVED AS COMPLYING WITH THE
SOUTH FLORIDA BUILDING CODE
DATE April 28, 2000
BY Ishag I. Chanda
PRODUCT CONTROL DIVISION
BUILDING CODE COMPLIANCE OFFICE
ACCEPTANCE NO. 99-0920.05

EngCo, Inc.
Engineering Services
CA# 8119
9957 NW 7th St.
Plantation - Florida - 33324
Tel.: 954 424-4064

MAR 22 2000
Pedro De Figueiredo
PE 52609

20ga Flush Steel Door

BRUNSWICK DOOR CO.
400 South Gooisby Blvd.
Deerfield Bch. - Florida - 33443
Tel.: 954 427-1700

Date: 8/8/99 | Scale: none | Designed by: PPMF

Rev. #	Description	Date
1	Add grout at header section	Date

SHEET 6 of 6

Drawing Number 122-99