MIAMI-DADE

BUILDING CODE COMPLIANCE OFFICE (BCCO)
PRODUCT CONTROL DIVISION

MIAMI-DADE COUNTY, FLORIDA
METRO-DADE FLAGLER BUILDING
140 WEST FLAGLER STREET, SUITE 1603
MIAMI, FLORIDA 33130-1563
(305) 375-2901 FAX (305) 375-2908

NOTICE OF ACCEPTANCE (NOA)

EFCO Corporation
1000 County Road
Monet, MO 65708

Scope:

This NOA is being issued under the applicable rules and regulations governing the use of construction materials. The documentation submitted has been reviewed by Miami-Dade County Product Control Division and accepted by the Board of Rules and Appeals (BORA) to be used in Miami Dade County and other areas where allowed by the Authority Having Jurisdiction (AHJ).

This NOA shall not be valid after the expiration date stated below. The Miami-Dade County Product Control Division (In Miami Dade County) and/or the AHJ (in areas other than Miami Dade County) reserve the right to have this product or material tested for quality assurance purposes. If this product or material fails to perform in the accepted manner, the manufacturer will incur the expense of such testing and the AHJ may immediately revoke, modify, or suspend the use of such product or material within their jurisdiction. BORA reserves the right to revoke this acceptance, if it is determined by Miami-Dade County Product Control Division that this product or material fails to meet the requirements of the applicable building code.

This product is approved as described herein, and has been designed to comply with the Florida Building Code, including the High Velocity Hurricane Zone.

DESCRIPTION: Series 5600 - 8" Deep Frame - Aluminum Curtain Wall System – Small Missile Impact

APPROVAL DOCUMENT: Drawing No. **1091**, titled "8" Deep Series 5600 Small Missile Impact Curtain Wall System", sheets 1 through 9, dated 01/15/02, with revision A1 dated 01/29/03, prepared by W.W. Schaefer Engineering & Consulting, P.A., signed and sealed by Warren W. Schaefer, P.E., bearing the Miami-Dade County Product Control Revision stamp with the Notice of Acceptance number and expiration date by the Miami-Dade County Product Control Division.

MISSILE IMPACT RATING: Small Missile Impact Resistant

LABELING: Each unit shall bear a permanent label with the manufacturer's name or logo, city, state and following statement: "Miami-Dade County Product Control Approved", unless otherwise noted herein.

RENEWAL of this NOA shall be considered after a renewal application has been filed and there has been no change in the applicable building code negatively affecting the performance of this product.

TERMINATION of this NOA will occur after the expiration date or if there has been a revision or change in the materials, use, and/or manufacture of the product or process. Misuse of this NOA as an endorsement of any product, for sales, advertising or any other purposes shall automatically terminate this NOA. Failure to comply with any section of this NOA shall be cause for termination and removal of NOA.

ADVERTISEMENT: The NOA number preceded by the words Miami-Dade County, Florida, and followed by the expiration date may be displayed in advertising literature. If any portion of the NOA is displayed, then it shall be done in its entirety.

INSPECTION: A copy of this entire NOA shall be provided to the user by the manufacturer or its distributors and shall be available for inspection at the job site at the request of the Building Official.

This NOA **revises NOA # 02-0308.13** and consists of this page 1 and evidence pages E-1, E-2, E-3, E-4 and E-5, as well as approval document mentioned above.

The submitted documentation was reviewed by **Manuel Perez, P.E.**

PRODUCT CONTROL ACCEPTED

NOA No 03-0410.03
Expiration Date: June 27, 2007
Approval Date: May 6, 2004

EFCO Corporation

NOTICE OF ACCEPTANCE: EVIDENCE SUBMITTED

(For File ONLY. Not part of NOA)

A. DRAWINGS

1. Manufacturer's die drawings and sections.
2. Drawing No. **1091**, dated 01/15/02, with revision A1 dated 01/29/03, titled "8" Deep Series 5600 Small Missile Impact Curtain Wall System", sheets 1 through 9, prepared by W.W. Schaefer Engineering & Consulting, P.A., signed and sealed by Warren W. Schaefer, P.E.

B. TESTS

1. Test reports on: 1) Air Infiltration Test, per PA 202-94
   2) Uniform Static Air Pressure Test, Loading per PA 202-94
   3) Water Resistance Test, per PA 202-94
   4) Small Missile Impact Test per SFBC, PA 201-94
   5) Large Missile Impact Test per SFBC, PA 201-94
   6) Cyclic Wind Pressure Loading per SFBC, PA 203-94

   along with installation diagram of a multiple span EFCO S5600 - **8" deep** outsize glazed aluminum curtain wall system 202" wide x 341" high x 64" return, specimen # **1 (A-A1),** Glass types: **1, 2, 4, 5, 6A & 8**, marked-up by Hurricane Test Laboratory, Inc. Test Report No. **HTL-0046-0413-01**, dated 2/16-19/01, signed and sealed by Vinu J. Abraham, P.E. ***(NOA02-0308.13)***
2. Test reports on: 1) Uniform Static Air Pressure Test, Loading per PA 202-94
   2) Large Missile Impact Test per SFBC, PA 201-94
   3) Cyclic Wind Pressure Loading per SFBC, PA 203-94

   along with installation diagram of a single span EFCO S5600 – **8" deep** outsize glazed aluminum curtain wall system 181-1/2" wide x 150" high, specimen # **9 (B1),** Glass types: **3 & 5**, marked-up by Hurricane Test Laboratory, Inc. Test Report No. **HTL-0046-0816-01**, dated 8/24-27/01, signed and sealed by Vinu J. Abraham, P.E. ***(Submitted under NOA#02-0308.13)***
3. Test reports on: 1) Air Infiltration Test, per PA 202-94
   2) Uniform Static Air Pressure Test, Loading per PA 202-94
   3) Water Resistance Test, per PA 202-94
   4) Large Missile Impact Test per SFBC, PA 201-94
   5) Cyclic Wind Pressure Loading per SFBC, PA 203-94

   along with installation diagram of a single span EFCO S5600 – **8" deep** outsize glazed aluminum curtain wall system 181-1/2" wide x 121-3/4" high, specimen # **3 (B3),** Glass types: **6 & 7**, marked-up by Hurricane Test Laboratory, Inc. Test Report No. **HTL-0046-0816-01**, dated 8/14-15/01, signed and sealed by Vinu J. Abraham, P.E. ***(Submitted under NOA#02-0308.13)***
4. Test reports on: 1) Uniform Static Air Pressure Test, Loading per PA 202-94
   2) Large Missile Impact Test per SFBC, PA 201-94
   3) Cyclic Wind Pressure Loading per SFBC, PA 203-94

   along with installation diagram of a single span EFCO S5600 – **7" deep** outsize glazed aluminum curtain wall system 181-1/2" wide x 121-3/4" high, specimen # **6 (C),** Glass types: **1, 3A & 4**, marked-up by Hurricane Test Laboratory, Inc. Test Report No. **HTL-0046-0413-01,** dated 4/26-27/01, signed and sealed by Vinu J. Abraham, P.E. ***(Submitted under NOA#02-0308.13)***

Manuel Perez

Manuel Perez, P.E.
Product Control Examiner
NOA No 03-0410.03
Expiration Date: June 27, 2007
Approval Date: May 6, 2004

NOTICE OF ACCEPTANCE: EVIDENCE SUBMITTED

(For File ONLY. Not part of NOA)

5. Test reports on: 1) Uniform Static Air Pressure Test, Loading per PA 202-94
2) Large Missile Impact Test per SFBC, PA 201-94
3) Cyclic Wind Pressure Loading per SFBC, PA 203-94
along with installation diagram of a single span EFCO S5600 – **6" deep** outsize glazed aluminum curtain wall system 181-1/2" wide x 169-1/4" high, specimen # **2 (D),** Glass types: **1, 4 & 5**, marked-up by Hurricane Test Laboratory, Inc. Test Report No. **HTL-0046-0816-01,** dated 8/13-16/01, signed and sealed by Vinu J. Abraham, P.E. ***(Submitted NOA#02-0308.13)***

6. Test reports on: 1) Uniform Static Air Pressure Test, Loading per PA 202-94
2) Large Missile Impact Test per SFBC, PA 201-94
3) Cyclic Wind Pressure Loading per SFBC, PA 203-94
along with installation diagram of a single span EFCO S5600 – 8" deep outsize glazed aluminum curtain wall system 181-1/2" wide x 121-3/4" high, specimen # **4 (E),** Glass type: **5**, marked-up by Hurricane Test Laboratory, Inc. Test Report No. **HTL-0046-0816-01,** dated 8/16-17/01, signed and sealed by Vinu J. Abraham, P.E. ***(Submitted under NOA#02-0308.13)***

7. Test reports on: 1) Air Infiltration Test, per PA 202-94
2) Uniform Static Air Pressure Test, Loading per PA 202-94
3) Water Resistance Test, per PA 202-94
4) Small Missile Impact Test per SFBC, PA 201-94
5) Cyclic Wind Pressure Loading per SFBC, PA 203-94
along with installation diagram of a single span EFCO S5600 – **8" deep** outsize glazed aluminum curtain wall system 181-1/2" wide x 121-3/4" high, specimen # **1 (F),** Glass type: **2**, marked-up by Hurricane Test Laboratory, Inc. Test Report No. **HTL-0046-0517-01,** dated 5/11-17/01, signed and sealed by Vinu J. Abraham, P.E. ***(Submitted under NOA#02-0308.13)***

8. Test reports on: 1) Air Infiltration Test, per PA 202-94
2) Uniform Static Air Pressure Test, Loading per PA 202-94
3) Water Resistance Test, per PA 202-94
4) Small Missile Impact Test per SFBC, PA 201-94
5) Large Missile Impact Test per SFBC, PA 201-94
6) Cyclic Wind Pressure Loading per SFBC, PA 203-94
along with installation diagram of a single span EFCO S5600 – 8" deep outsize glazed aluminum curtain wall system 181-1/2" wide x 116" high, specimen # **5 (G)**, Glass types: **2, 4 & 5**, marked-up by Hurricane Test Laboratory, Inc. Test Report No. HTL-**0046-0816-01**, dated 8/20/01, signed and sealed by Vinu J. Abraham, P.E. ***(Submitted NOA#02-0308.13)***

9. Test reports on: 1) Uniform Static Air Pressure Test, Loading per PA 202-94
2) Large Missile Impact Test per SFBC, PA 201-94
3) Small Missile Impact Test per SFBC, PA 201-94
4) Cyclic Wind Pressure Loading per SFBC, PA 203-94
along with installation diagram of a single span EFCO S5600 – **8" deep** outsize glazed aluminum curtain wall system 181-1/2" wide x 150" high, specimen # **6b (H),** Glass types: **2, 4 & 5**, marked-up by Hurricane Test Laboratory, Inc. Test Report No. **HTL-0046-0816-01,** dated 8/21-23/01, signed and sealed by Vinu J. Abraham, P.E. ***(Submitted NOA#02-0308.13)***

Manuel Perez, P.E.
Product Control Examiner
NOA No 03-0410.03
Expiration Date: June 27, 2007
Approval Date: May 6, 2004

NOTICE OF ACCEPTANCE: EVIDENCE SUBMITTED

10. Test reports on: 1) Uniform Static Air Pressure Test, Loading per PA 202-94
2) Large Missile Impact Test per SFBC, PA 201-94
3) Small Missile Impact Test per SFBC, PA 201-94
4) Cyclic Wind Pressure Loading per SFBC, PA 203-94
along with installation diagram of a single span EFCO S5600 – **6" deep** outsize glazed aluminum curtain wall system 181-1/2" wide x 98" high, specimen # **8 (J),** Glass types: **1, 2 & 5**, marked-up by Hurricane Test Laboratory, Inc. Test Report No. **HTL-0046-0816-01,** dated 8/23-24/01, signed and sealed by Vinu J. Abraham, P.E. ***(Submitted NOA#02-0308.13)***

11. Test reports on: 1) Uniform Static Air Pressure Test, Loading per PA 202-94
2) Large Missile Impact Test per SFBC, PA 201-94
3) Small Missile Impact Test per SFBC, PA 201-94
4) Cyclic Wind Pressure Loading per SFBC, PA 203-94
along with installation diagram of a single span EFCO S5600 – **8" deep** outsize glazed aluminum curtain wall system 181-1/2" wide x 150" high, specimen # **6a (K),** Glass types: **2, 4 & 5**, marked-up by Hurricane Test Laboratory, Inc. Test Report No. **HTL-0046-0816-01,** dated 8/21-23/01, signed and sealed by Vinu J. Abraham, P.E. ***(Submitted NOA#02-0308.13)***

12. Test reports on: 1) Air Infiltration Test, per PA 202-94
2) Uniform Static Air Pressure Test, Loading per PA 202-94
3) Water Resistance Test, per PA 202-94
4) Large Missile Impact Test per SFBC, PA 201-94
5) Cyclic Wind Pressure Loading per SFBC, PA 203-94
along with installation diagram of a single span EFCO S5600 – **6" deep** outsize glazed aluminum curtain wall system 181-1/2" wide x 112" high, specimen # **7 (L)**, Glass type: **5**, marked-up by Hurricane Test Laboratory, Inc. Test Report No. **HTL-0046-0816-01**, dated 8/21-22/01, signed and sealed by Vinu J. Abraham, P.E ***(Submitted under NOA#02-0308.13)***

13. Test reports on: 1) Uniform Static Air Pressure Test, Loading per PA 202-94
2) Large Missile Impact Test per SFBC, PA 201-94
3) Cyclic Wind Pressure Loading per SFBC, PA 203-94
along with installation diagram of a single span EFCO S5600 – **8" deep** outsize glazed aluminum curtain wall system 181-1/2" wide x 121-3/4" high, specimen # **1 (M),** Glass type: **6a**, marked-up by Hurricane Test Laboratory, Inc. Test Report No. **HTL-0046-1004-01,** dated 10/17/01, signed and sealed by Vinu J. Abraham, P.E. ***(Submitted under NOA#02-0308.13)***

14. Test reports on 1) Uniform Static Air Pressure Test, Loading per SFBC, PA 202-94
2)Large Missile Impact Test per SFBC, PA 201-94
3)Cyclic Wind Pressure Loading per SFBC, PA 203-94
along with installation diagram of a series 300 medium stile pair of doors in an 8" deep aluminum curtain wall system frame; prepared by Hurricane Test Laboratory, Test Report No. **HTL-0046-1217-01, Elevation F,** dated 12/12-13/01, signed and sealed by Vinu J. Abraham, P.E.

Manuel Perez, P.E.
Product Control Examiner
NOA No 03-0410.03
Expiration Date: June 27, 2007
Approval Date: May 6, 2004

15. Test reports on 1) Uniform Static Air Pressure Test, Loading per SFBC, PA 202-94
2)Large Missile Impact Test per SFBC, PA 201-94
3)Cyclic Wind Pressure Loading per SFBC, PA 203-94
along with installation diagram of a series 300 medium stile pair of doors in an 8" deep aluminum curtain wall system frame; prepared by Hurricane Test Laboratory, Test Report No. **HTL-0046-0315-02, Elevation H,** dated 3/19-25/03, signed and sealed by Vinu J. Abraham, P.E.

16. Test reports on 1) Uniform Static Air Pressure Test, Loading per SFBC, PA 202-94
2)Large Missile Impact Test per SFBC, PA 201-94
3)Cyclic Wind Pressure Loading per SFBC, PA 203-94
along with installation diagram of a three-bays specimen of a series S5600 8" deep outside glazed Curtain wall system, 176" wide x 128-1/2" high, specimen **#1**; prepared by Hurricane Test Laboratory, Test Report No. **HTL-0046-1019-03, Elevation A,** dated 10/20/03, signed and sealed by Vinu J. Abraham, P.E.

17. Test reports on 1) Uniform Static Air Pressure Test, Loading per SFBC, PA 202-94
2)Large Missile Impact Test per SFBC, PA 201-94
3)Cyclic Wind Pressure Loading per SFBC, PA 203-94
along with installation diagram of a three-bays specimen of a series S5600 6" deep outside glazed Curtain wall system, 182-1/2" wide x 98" high, specimen **#2**; prepared by Hurricane Test Laboratory, Test Report No. **HTL-0046-0113-04, Elevation C,** dated 01/09-12/04, signed and sealed by Vinu J. Abraham, P.E.

C. CALCULATIONS:

1. Anchor calculations and structural analysis, dated 01/30/02, with addendum letters dated 04/23/02, prepared by W. W. Schaefer Engineering & Consulting, P.A., signed and sealed by Warren W. Schaefer, P.E. ***(Submitted under NOA#02-0308.13)***

2. Anchor calculations and structural analysis, dated 01/27/03 and 04/07/04, prepared by W. W. Schaefer Engineering & Consulting, P.A., signed and sealed by Warren W. Schaefer, P.E.

D. QUALITY ASSURANCE

1. Miami Dade Building Code Compliance Office (BCCO).

Manuel Perez, P.E.
Product Control Examiner
NOA No 03-0410.03
Expiration Date: June 27, 2007
Approval Date: May 6, 2004

NOTICE OF ACCEPTANCE: EVIDENCE SUBMITTED

E. MATERIAL CERTIFICATIONS

1. Notice of Acceptance No. **00-1212.04** issued to **E.I. DuPont DeNemours** for "***Dupont Butacite ® PVB***" dated 02/15/01, expiring on 02/11/05.
2. Notice of Acceptance No. **01-0205.02** issued to **Solutia, Inc.** for "***Saflex/Keepsafe Maximum***" dated 05/17/01, expiring on 05/21/06.
3. Proposal No. **01-0092**, acceptance letter dated July 30, 2001, issued by this Office and signed by Jaime Gascon.

F. STATEMENTS

1. Statement letter of conformance, dated February 11, 2002, signed and sealed by Warren W. Schaefer, P.E.
2. Statement letter of no financial interest, February 11, 2002, signed and sealed by dated Warren W. Schaefer P.E.
3. Laboratory compliance letter for Test Reports No. **HTL-0046-0413-01, HTL-0046-0517-01 & HTL-0046-0816-01** issued by Hurricane Test Laboratory, Inc., dated October 23, 2001, signed and sealed by Vinu J. Abraham, P.E.
4. Laboratory compliance letter for Test Reports No. **HTL-0046-1019-03** issued by Hurricane Test Laboratory, Inc., dated October 30, 2003, signed and sealed by Vinu J. Abraham, P.E.
5. Laboratory compliance letter for Test Reports No. **HTL-0046-0113-04** issued by Hurricane Test Laboratory, Inc., dated January 15, 2004, signed and sealed by Vinu J. Abraham, P.E.

G. OTHER

1. Notice of Acceptance No. **02-0308.13**, issued to EFCO Corporation for their Series 5800 - 8" Deep Frame" Aluminum Curtain Wall System – Small Missile Impact, approved on 06/27/02 and expiring on 06/27/07.

Manuel Perez, P.E.
Product Control Examiner
NOA No 03-0410.03
Expiration Date: June 27, 2007
Approval Date: May 6, 2004

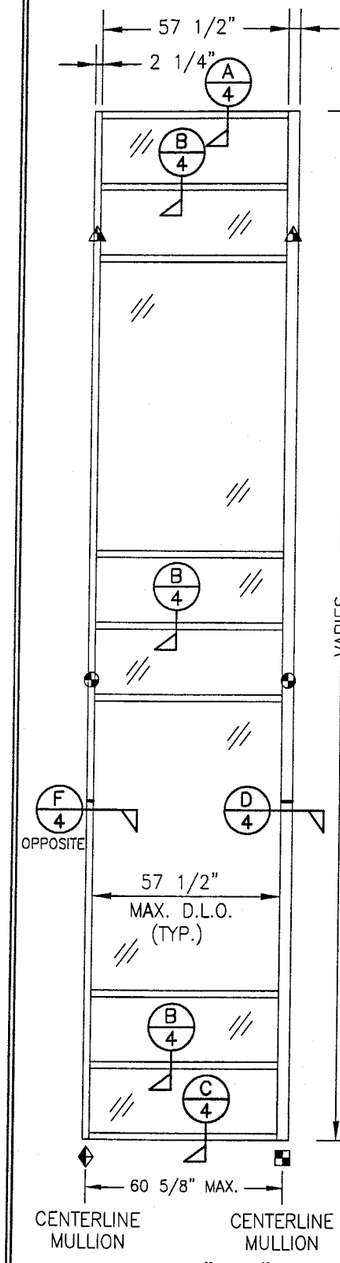

VIEW "A-A"
(EXTERIOR ELEVATION)
ONLY ONE ROW SHOWN; MORE THAN ONE ROW MAY BE INSTALLED

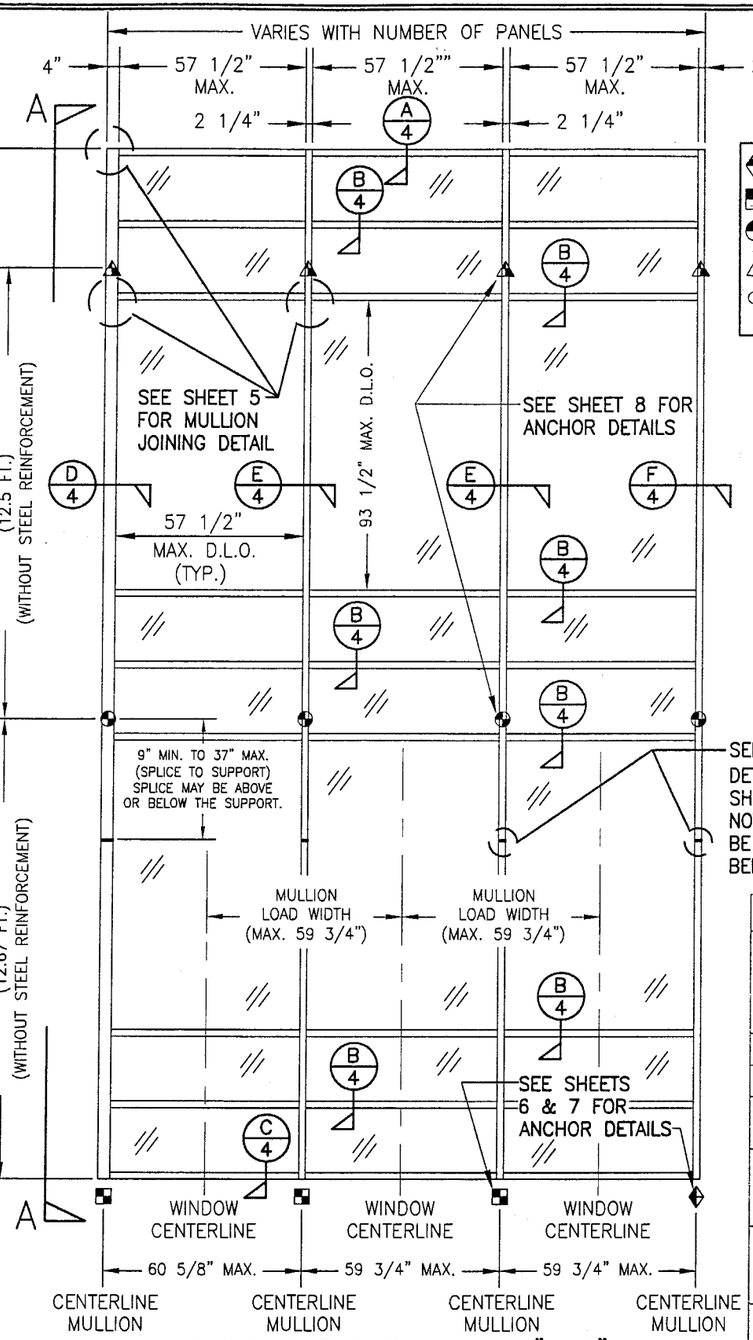

EXTERIOR ELEVATION; VIEW "B-B"
CURTAIN WALL WITH MULTIPLE VERTICAL SPANS
SCALE: 1/4"=1'-0"

ALLOWABLE DESIGN LOADS
SEE LOAD TABLES ON SHEETS 2 & 3

NOTE: THIS ELEVATION SHOWS THE 5600 CURTAIN WALL SYSTEM IN A MULTI-STORY APPLICATION. THE NUMBER OF FLOORS WITH WHICH THIS SYSTEM MAY BE USED RANGE FROM TWO(2) TO UNLIMITED WITH THE ONLY RESTRICTIONS BEING AS SHOWN ON THE SPAN BETWEEN FLOORS/SUPPORTS AND THE D.L.O. SIZE

◆ = F OR TF-ANCHOR
■ = M OR TM-ANCHOR
● = DEAD LOAD ANCHOR
▲ = WIND LOAD ANCHOR
◆ = DOOR JAMB MULLION SHEAR BLOCK ANCHOR

GENERAL NOTES

1. THESE CURTAIN WALL SYSTEMS HAVE BEEN TESTED, ANALYZED AND APPROVED FOR DESIGN PRESSURES NOT TO EXCEED THOSE SHOWN IN THE "ALLOWABLE DESIGN LOADS" TABLE.
2. BUCKING, OPENINGS & BUCKING FASTENERS MUST BE PROPERLY DESIGNED & INSTALLED TO TRANSFER WIND LOADS TO THE STRUCTURE.
3. ALL HARDWARE & FASTENERS SHALL BE IN ACCORDANCE WITH THESE DRAWINGS & MAY NOT VARY UNLESS SPECIFICALLY MENTIONED ON THE DRAWINGS.
4. THE DETAILS & SPECIFICATIONS SHOWN HEREIN REPRESENT THE PRODUCTS TESTED & PROPOSED FOR WATER, AIR, IMPACT, CYCLIC & UNIFORM STATIC AIR PRESSURE TESTING IN CONFORMANCE WITH DADE COUNTY PROTOCOLS PA 201, 202 & 203 FOR IMPACT REQUIREMENTS.
5. THESE CURTAIN WALL SYSTEMS HAVE BEEN DESIGNED IN ACCORDANCE WITH THE FLORIDA BUILDING CODE (F.B.C.).
6. ALL ANCHORS SHALL BE INSTALLED AS SPECIFIED ON THESE DRAWINGS. SPECIFIED EMBEDMENT TO BASE MATERIAL SHALL BE BEYOND WALL FINISH OR STUCCO.
7. THERE SHALL BE NO LIMIT TO THE NUMBER OF HORIZONTAL & VERTICAL PANELS USED FOR ANY JOB PROVIDING ALL RESTRICTIONS ARE MET PER THE ELEVATIONS.
8. ALL SUBSTRATE SHALL HAVE THE FOLLOWING MINIMUM REQUIREMENTS.
   a) ALL CONCRETE SUBSTRATE SHALL BE MIN. 3000 PSI.
   b) ALL WOOD SUBSTRATE SHALL BE MIN. G = 0.55 DENSITY.
   c) ALL METAL STUD SUBSTRATE SHALL BE MIN. 16 GA. Fy = 50 ksi.
   d) ALL STRUCTURAL STEEL SUBSTRATE SHALL BE MIN. 1/8" THK. & Fy = 36 ksi.

PRODUCT REVISED
as complying with the Florida Buiding Code
Acceptance No. 03-0410.03
Expiration Date JUNE 27, 2007
By Manuel Perez
Miami Dade Product Control Division

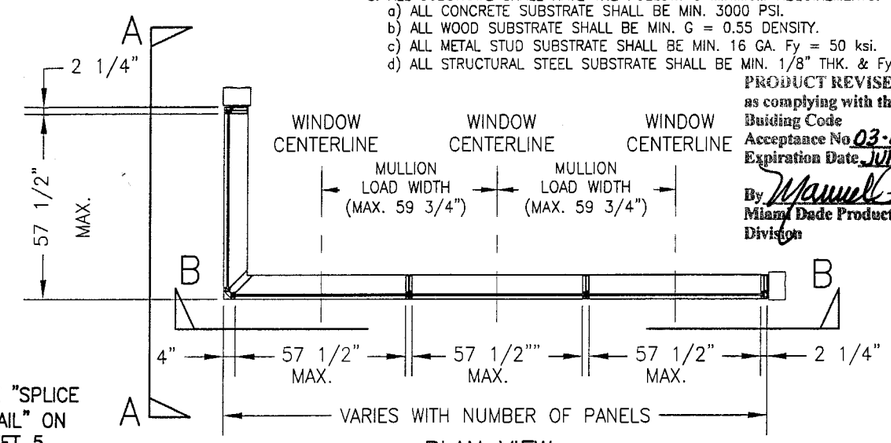

PLAN VIEW
CURTAIN WALL WITH MULTIPLE VERTICAL SPANS
SCALE: 1/4"=1'-0"

"F", "TF", "M", "TM" & SHEAR BLOCK ANCHOR FASTENER REQUIREMENTS TABLE

OPENING TYPE (SUBSTRATE)	ANCHOR TO OPENING FASTENER TYPE	NO. FASTENERS PER ANCHOR INTO SUBSTRATE		MINIMUM EMBED	MINIMUM EDGE DIST.
		SHEAR BLOCK ANCHORS	F, TF, M & TM ANCHORS		
WOOD	(1) 1/2" LAG SCREW	N/A	6	(2) 3"	1"
MIN. 16 GA. STUD	NO. 14 TEK SCREW	5	6	FULL	1/2"
STRUCT. STEEL MIN. 1/8" THK.	NO. 14 TEK SCREW	5	4	FULL	1/2"
CONCRETE	3/8" HILTI KWIK BOLT II S.S. EXPANSION ANCHOR OR 3/8" S.S. RAWL POWER-BOLT	N/A	4	2 1/2"	(3) 3"
CONCRETE	1/2" HILTI KWIK BOLT II S.S. EXPANSION ANCHOR OR 1/2" S.S. RAWL POWER-BOLT	2	N/A	3 1/2"	(4) 5 1/8"

(1) PREDRILL REQUIRED SIZE HOLES IN WOOD FOR PLACEMENT OF LAG SCREWS.
(2) LAG SCREW EMBEDMENT INTO WOOD FOR F, TF, M & TM ANCHORS MUST BE MIN. 4" WHEN THE "MULLION LOAD WIDTH" EXCEEDS 59 3/4" (3" FOR ALL OTHER ANCHORS).
(3) EDGE DISTANCE FOR 3/8" BOLTS INTO CONCRETE MAY BE REDUCED TO 2 1/2" WHEN RAWL POWER BOLTS ARE USED.
(4) EDGE DISTANCE FOR 1/2" BOLTS INTO CONCRETE MAY BE REDUCED TO 3" WHEN RAWL POWER BOLTS ARE USED.

DRAWN BY: W.W.S.	CHECKED BY: W.W.S.
PLOT: 1=48	DATE: 01/15/02

NO.	REVISION DESCRIPTION	BY	DATE
A1	ADDED DOOR OPENING CONDITION & EDITED LOAD TABLES TO INCORPORATE DOOR CONDITION	K.P.S.	01/29/03

DRAWING TITLE
8" DEEP SERIES 5600 SMALL MISSILE IMPACT CURTAIN WALL SYSTEM

MANUFACTURER
EFCO CORPORATION
1000 COUNTY ROAD; P.O. BOX 609
MONETT, MO 65708-0609
800-221-4169

CONSULTANTS
W. W. SCHAEFER ENGINEERING & CONSULTING, P.A.
600 SANDTREE DRIVE; SUITE 203B
PALM BEACH GARDENS, FL 33403
PHONE: 561-775-4902 FAX: 561-775-4903

CERTIFICATION
APR 07 2004
WARREN W. SCHAEFER, P.E.
P.E. NO. 44135

DRAWING NO. 1091
REV. A
SHEET NO. 1 OF 9

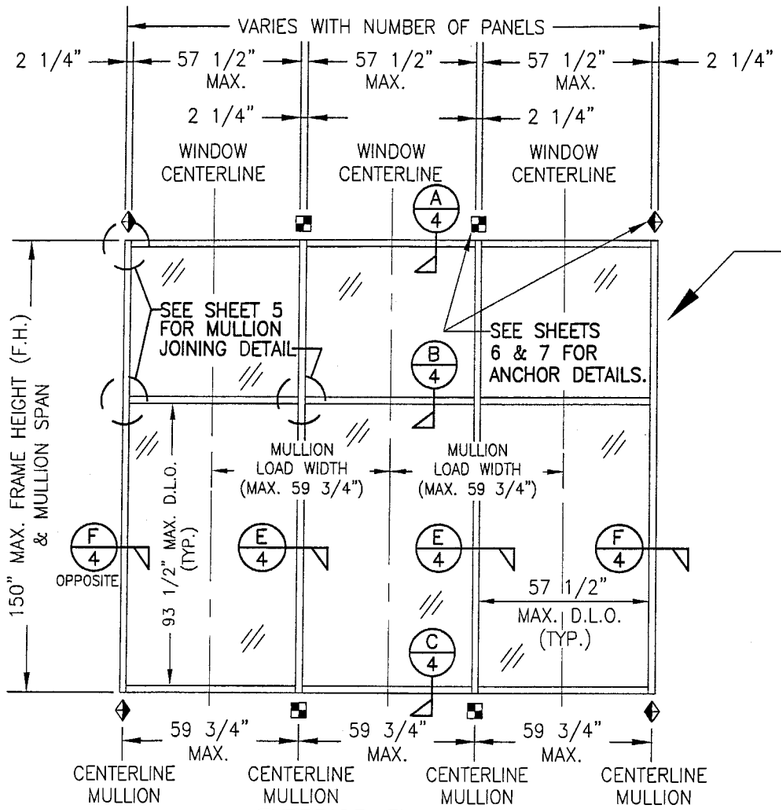

EXTERIOR ELEVATION
CURTAIN WALL WITH SINGLE VERTICAL SPAN
SCALE: 1/4"=1'-0"

NOTE: THIS ELEVATION SHOWS THE 5600 CURTAIN WALL SYSTEM IN A SINGLE SPAN APPLICATION. ALL SINGLE SPAN APPLICATIONS ARE LIMITED BY EACH THE D.L.O. SIZES OF THE LIGHTS & THE HEIGHT/SPAN SHOWN. IF REQUIRED HEIGHT EXCEEDS THAT SHOWN IN THIS ELEVATION, THE SYSTEM MUST BE SUPPORTED AS TWO OR MORE SPANS PER THE MULTIPLE SPAN ELEVATION.

NOTE: THE ELEVATIONS ON THIS SHEET MAY HAVE A 90 DEGREE TURN AS SHOWN ON SHEET 1 ELEVATION OF THE MULTI-SPAN SYSTEM. REF. VIEW "A-A" ON SHEET 1 FOR DETAIL.

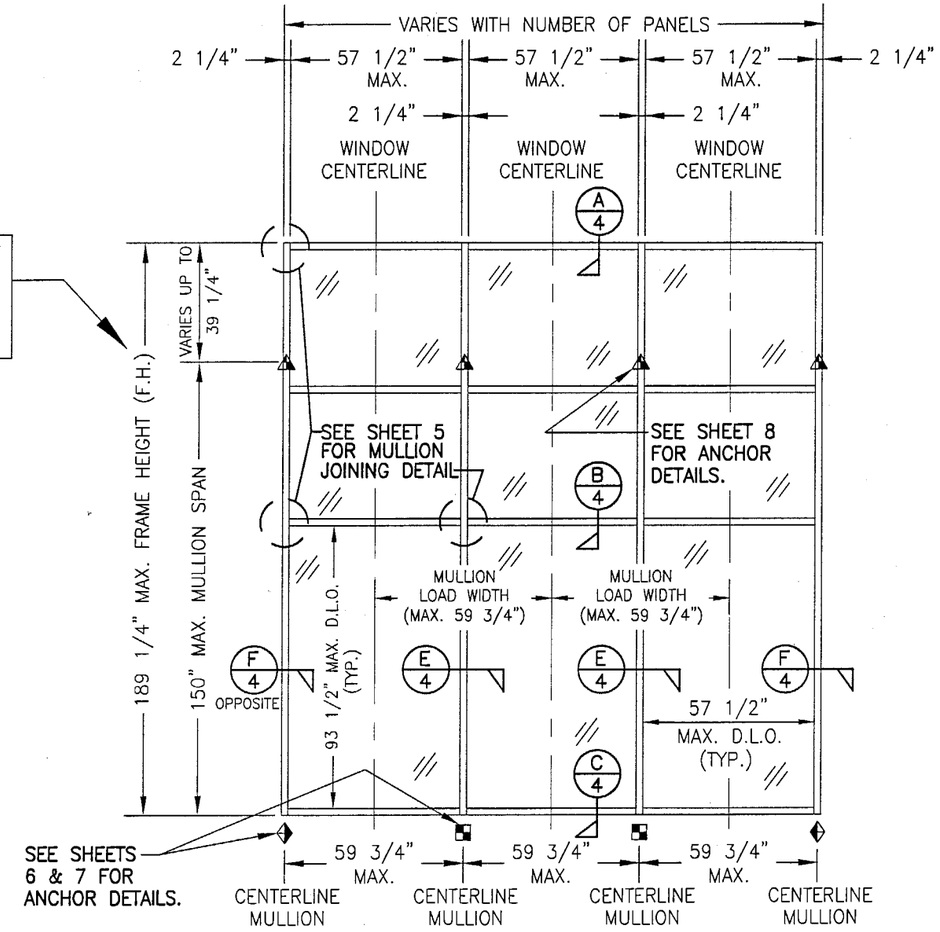

EXTERIOR ELEVATION; CURTAIN WALL
WITH SINGLE VERTICAL SPAN AND CANTELEVER
SCALE: 1/4"=1'-0"

NOTE: THIS ELEVATION SHOWS THE 5600 CURTAIN WALL SYSTEM IN A SINGLE SPAN APPLICATION. ALL SINGLE SPAN APPLICATIONS ARE LIMITED BY EACH THE D.L.O. SIZES OF THE LIGHTS & THE HEIGHT/SPAN SHOWN. IF REQUIRED HEIGHT EXCEEDS THAT SHOWN IN THIS ELEVATION, THE SYSTEM MUST BE SUPPORTED AS TWO OR MORE SPANS PER THE MULTIPLE SPAN ELEVATION.

◆ = F OR TF-ANCHOR
■ = M OR TM-ANCHOR
◐ = DEAD LOAD ANCHOR
▲ = WIND LOAD ANCHOR
◐ = DOOR JAMB MULLION SHEAR BLOCK ANCHOR

PRODUCT REVISED
as complying with the Florida Buiding Code
Acceptance No 03-0410.03
Expiration Date JUNE 27, 2007
By Manuel Perez
Miami-Dade Product Control Division

DRAWN BY: W.W.S.	CHECKED BY: W.W.S.
PLOT: 1=48	DATE: 01/15/02

NO.	REVISION DESCRIPTION	BY	DATE

DRAWING TITLE
8" DEEP SERIES 5600 SMALL MISSILE IMPACT CURTAIN WALL SYSTEM

MANUFACTURER
EFCO CORPORATION
1000 COUNTY ROAD; P.O. BOX 609
MONETT, MO 65708-0609
800-221-4169

CONSULTANTS
W. W. SCHAEFER ENGINEERING & CONSULTING, P.A.
600 SANDTREE DRIVE; SUITE 203B
PALM BEACH GARDENS, FL 33403
PHONE: 561-775-4902 FAX: 561-775-4903

CERTIFICATION
APR 07 2004
WARREN W. SCHAEFER, P.E.
P.E. NO. 44135

DRAWING NO. 1091
REV. A
SHEET NO. 2 OF 9

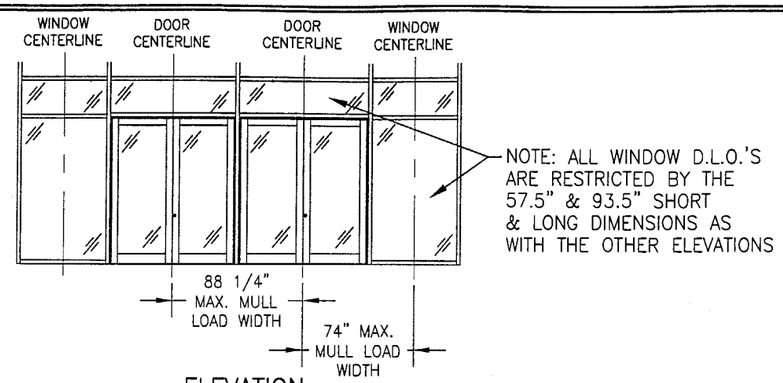

NOTE: CONDITIONS SHOWN ALSO APPLY TO SINGLE PANEL DOOR CONDITIONS.

ELEVATION

NOT TO SCALE

(2 SIDE BY SIDE DOUBLE DOORS IN CURTAIN WALL)

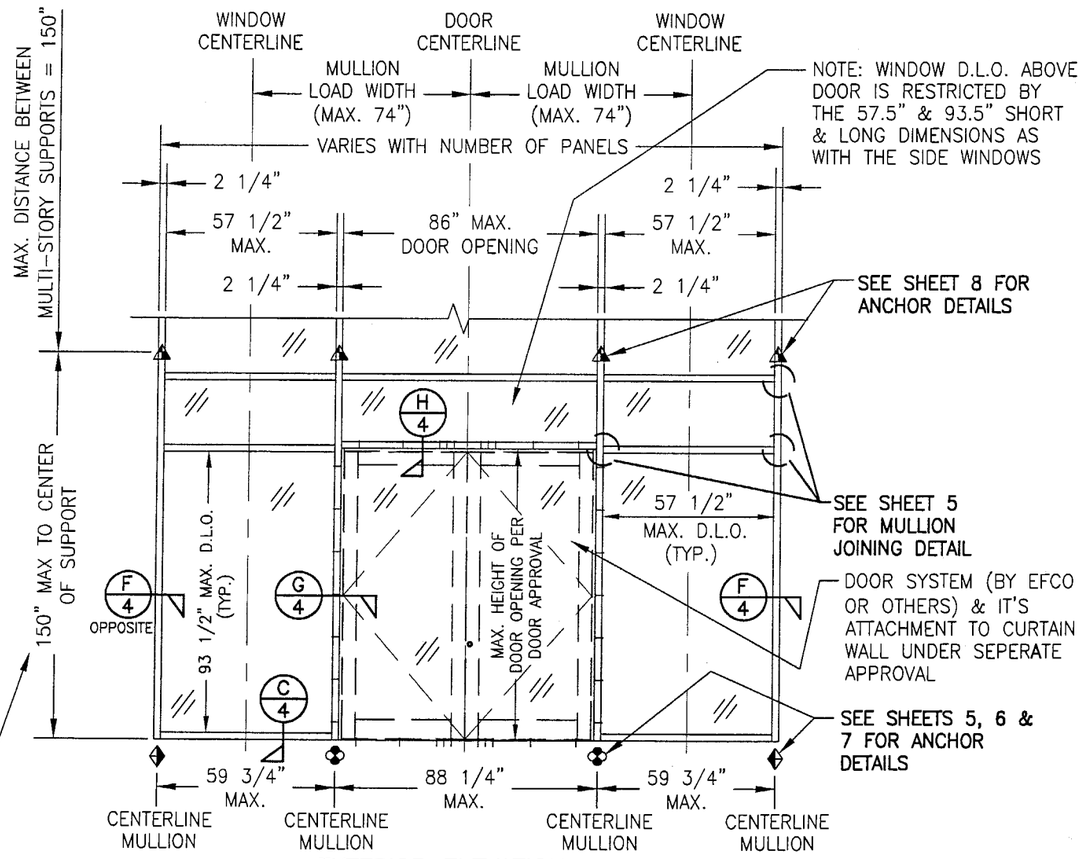

THIS DIMENSION ALSO APPLIES TO SINGLE VERTICAL SPAN CONDITION AS THE MAX. HEIGHT.

EXTERIOR ELEVATION
CURTAIN WALL WITH DOOR

SCALE: 1/4"=1'-0"

NOTE: THE ELEVATION ON THIS SHEET MAY HAVE A 90 DEGREE TURN AS SHOWN ON SHEET 1 ELEVATION OF THE MULTI-SPAN SYSTEM. REF. VIEW "A-A" ON SHEET 1 FOR DETAIL.

NOTE: THIS ELEVATION SHOWS THE 5600 CURTAIN WALL SYSTEM IN A MULTI-STORY APPLICATION WITH A DOOR OPENING. DIMENSIONAL RESTRICTIONS ARE AS SHOWN IN THE ELEVATION. FOR AREA ABOVE DOOR AND FOR SINGLE SPAN MULLION CONDITION, REFERENCE OTHER SECTIONS.

ALLOWABLE FRAMING DESIGN PRESSURES

WITHOUT REINFORCMENT IN MULLIONS

VERTICAL DISTANCE BETWEEN SUPPORTS	(2) MAXIMUM MULLION LOAD WIDTH	ALLOWABLE DESIGN LOAD POSITIVE & NEGATIVE (PSF)
96" & LESS	80"	90.0
	88"	89.2
102"	74"	90.0
	80"	86.9
	88"	79.0
108"	66"	90.0
	74"	83.8
	80"	77.5
	88"	70.5
116"	59 3/4"	90.0
	66"	81.5
	74"	72.7
	80"	67.2
	88"	61.1
120"	54"	90.0
	59 3/4"	81.3
	66"	73.6
	74"	65.6
	80"	60.7
	88"	55.2
132"	36"	90.0
	42"	86.9
	48"	76.0
	54"	67.6
	59 3/4"	61.1
	66"	55.3
	74"	49.3
	80"	45.6
	88"	41.5
144"	24"	90.0
	30"	86.4
	36"	72.0
	42"	61.7
	48"	54.0
	54"	48.0
	59 3/4"	43.4
	66"	39.3
	74"	35.0
	80"	32.4
	88"	29.5

WITHOUT REINFORCMENT IN MULLIONS

VERTICAL DISTANCE BETWEEN SUPPORTS	MAXIMUM MULLION LOAD WIDTH	ALLOWABLE DESIGN LOAD POSITIVE & NEGATIVE (PSF)
150"	24"	90.0
	30"	79.7
	36"	66.4
	42"	56.9
	48"	49.8
	54"	44.3
	59 3/4"	40.0
	66"	36.2
	74"	32.3
	80"	29.9
	88"	27.2

WITH REINFORCED VERTICAL MULLIONS

VERTICAL DISTANCE BETWEEN SUPPORTS	MAXIMUM MULLION LOAD WIDTH	ALLOWABLE DESIGN LOAD POSITIVE & NEGATIVE (PSF)
120" & LESS	88"	90.0
128"	80"	90.0
	88"	85.8
136"	74"	90.0
	80"	83.6
	88"	76.0
144"	66"	90.0
	74"	80.6
	80"	74.6
	88"	67.8
150"	59 3/4"	90.0
	66"	82.4
	74"	73.5
	80"	68.0
	88"	61.8

1. THE LOADS IN THIS TABLE ARE APPLICABLE FOR SINGLE & MULTI SPAN SYSTEMS.
2. REGARDLESS OF LOAD WIDTHS SPECIFIED IN THIS TABLE, THE D.L.O. OF FIXED GLASS PANELS MAY NOT EXCEED 57 1/2" IN THEIR SHORT SIDE DIMENSION NOR 93 1/2" IN THEIR LONG SIDE DIMENSION.

◆ = F OR TF-ANCHOR
■ = M OR TM-ANCHOR
◐ = DEAD LOAD ANCHOR
▲ = WIND LOAD ANCHOR
◆ = DOOR JAMB MULLION SHEAR BLOCK ANCHOR

PRODUCT REVISED
as complying with the Florida Building Code
Acceptance No 03-0410.03
Expiration Date JUNE 27, 2007
By Manuel Perez
Miami Dade Product Control Division

DRAWN BY: W.W.S.	CHECKED BY: W.W.S.
PLOT: 1=48	DATE: 01/15/02

NO.	REVISION DESCRIPTION	BY	DATE

DRAWING TITLE
8" DEEP SERIES 5600 SMALL MISSILE IMPACT CURTAIN WALL SYSTEM

MANUFACTURER
EFCO CORPORATION
1000 COUNTY ROAD; P.O. BOX 609
MONETT, MO 65708-0609
800-221-4169

CONSULTANTS
W. W. SCHAEFER ENGINEERING & CONSULTING, P.A.
600 SANDTREE DRIVE; SUITE 203B
PALM BEACH GARDENS, FL 33403
PHONE: 561-775-4902 FAX: 561-775-4903

CERTIFICATION
APR 07 2004
WARREN W. SCHAEFER, P.E.
P.E. NO. 44135

DRAWING NO. 1091
REV. A
SHEET NO. 3 OF 9

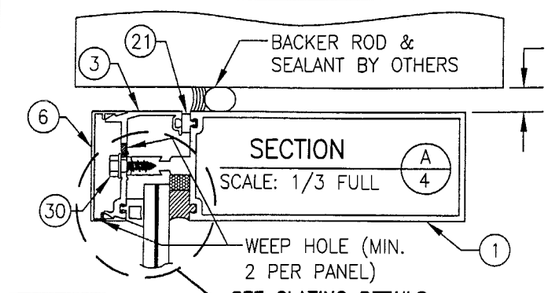

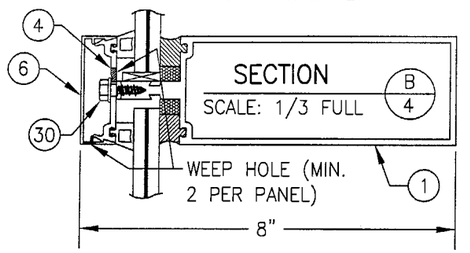

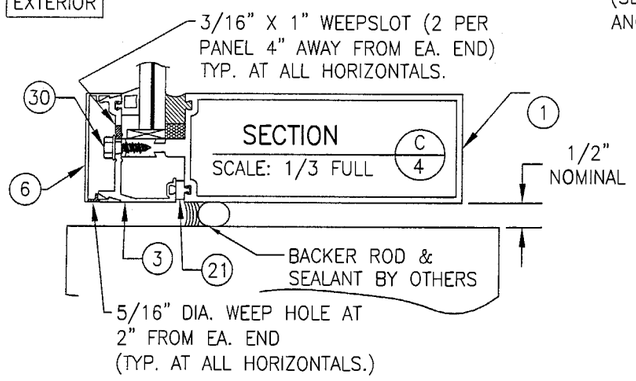

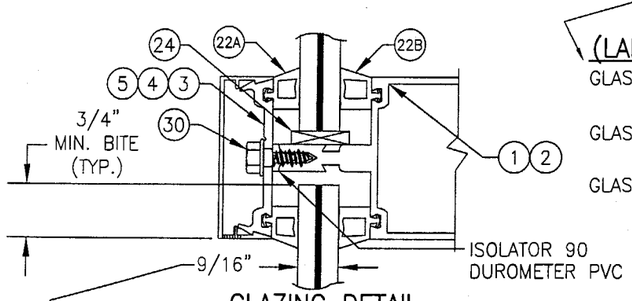

GLAZING DETAIL
(LAMINATED GLASS WITH DRY/DRY GLAZING)

GLASS "A": 9/16" SOLUTIA SAFLEX: 1/4" HT. ST./0.06 PVB/ 1/4" HT. ST.

GLASS "B": 9/16" DUPONT BUTACITE: 1/4" HT. ST./0.06 PVB/ 1/4" HT. ST.

GLASS "C": 9/16" OLDCASTLE GLASS: 1/4" HT. ST./0.06 SOLUTIA PVB/ 1/4" HT. ST.

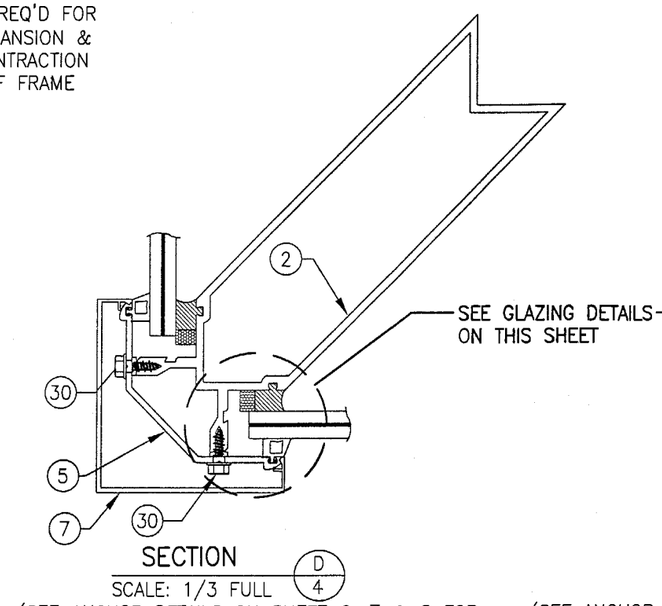

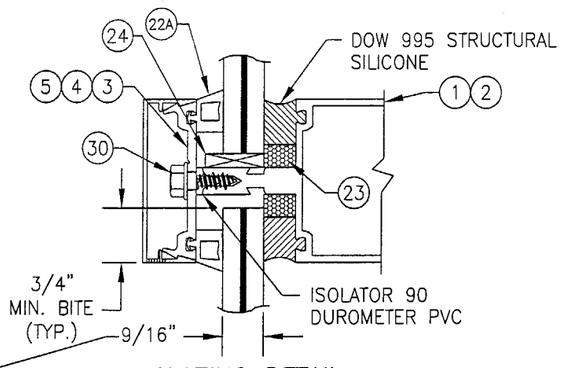

GLAZING DETAIL
(LAMINATED GLASS WITH DRY/WET GLAZING)

GLASS "A": 9/16" SOLUTIA SAFLEX: 1/4" HT. ST./0.06 PVB/ 1/4" HT. ST.

GLASS "B": 9/16" DUPONT BUTACITE: 1/4" HT. ST./0.06 PVB/ 1/4" HT. ST.

GLASS "C": 9/16" OLDCASTLE GLASS: 1/4" HT. ST./0.06 SOLUTIA PVB/ 1/4" HT. ST.

GLAZING DETAILS SHOWN SHOW MIDDLE MULLIONS. GLAZING AT EDGE MULLIONS & CORNER MULLIONS IS THE SAME.

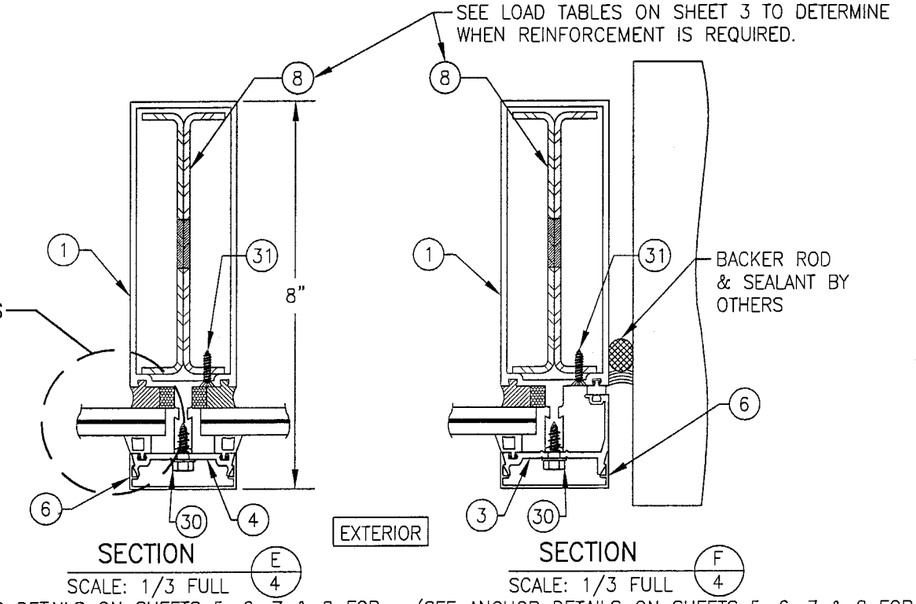

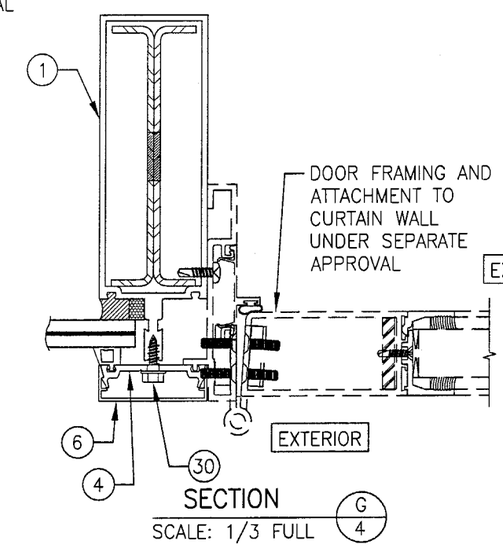

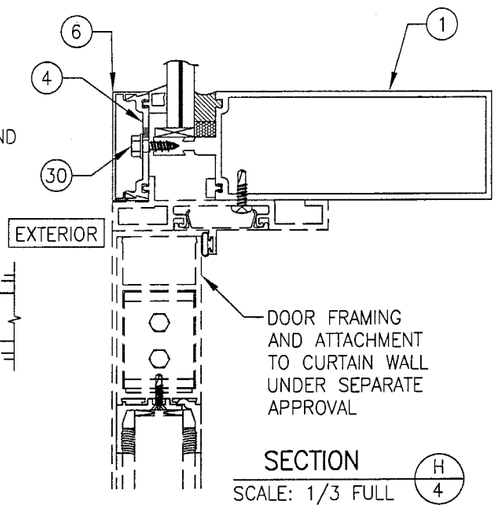

PRODUCT REVISED
as complying with the Florida Building Code
Acceptance No. 03-0410.03
Expiration Date JUNE 27, 2007
By Manuel Perez
Miami-Dade Product Control Division

DRAWN BY: W.W.S.	CHECKED BY: W.W.S.
PLOT: 1=3	DATE: 01/15/02

NO.	REVISION DESCRIPTION	BY	DATE

DRAWING TITLE
8" DEEP SERIES 5600 SMALL MISSILE IMPACT CURTAIN WALL SYSTEM

MANUFACTURER
EFCO CORPORATION
1000 COUNTY ROAD; P.O. BOX 609
MONETT, MO. 65708-0609
800-221-4169

CONSULTANTS
W. W. SCHAEFER ENGINEERING & CONSULTING, P.A.
600 SANDTREE DRIVE; SUITE 203B
PALM BEACH GARDENS, FL 33403
PHONE: 561-775-4902 FAX: 561-775-4903

CERTIFICATION
APR 07 2004
WARREN W. SCHAEFER, P.E.
P.E. NO. 44135

DRAWING NO. 1091
REV. A
SHEET NO. 4 OF 9

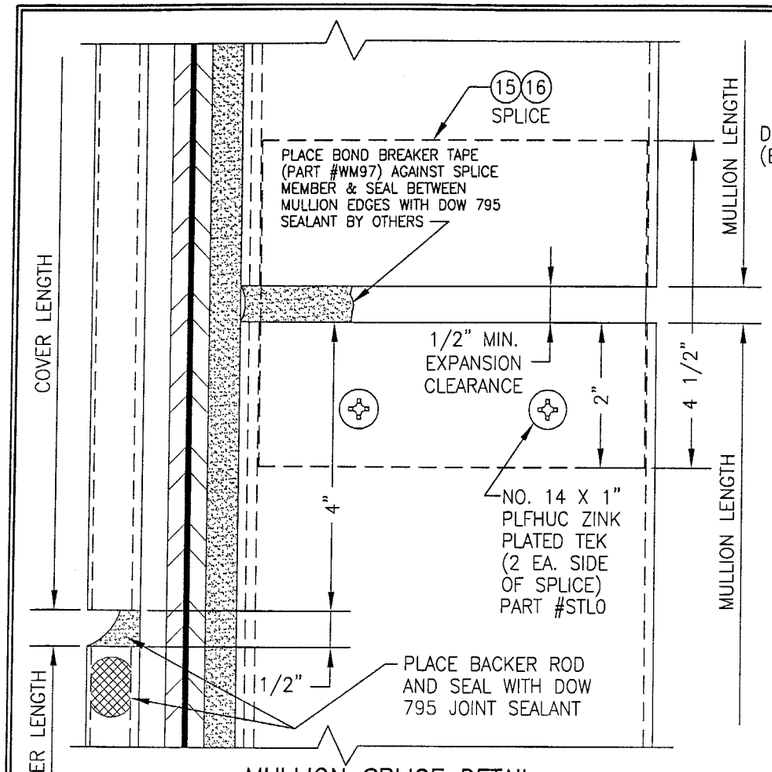

MULLION SPLICE DETAIL

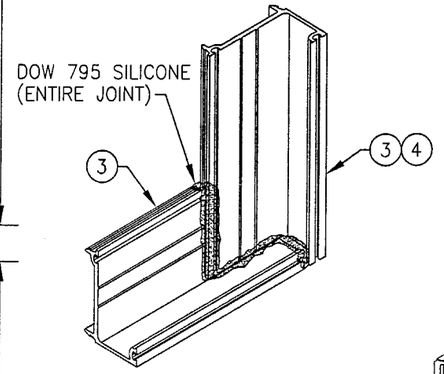

PRESSURE PLATE JOINT (TYP. AT CORNERS)

SIMILAR AT MID MULLION ENDS EXCEPT THAT THE HORIZONTAL PRESSURE PLATES SEAM TOGETHER AT THE MULLION CENTERLINE WITH A 1/8" SEAM SEALED WITH DOW 795 SILICONE.

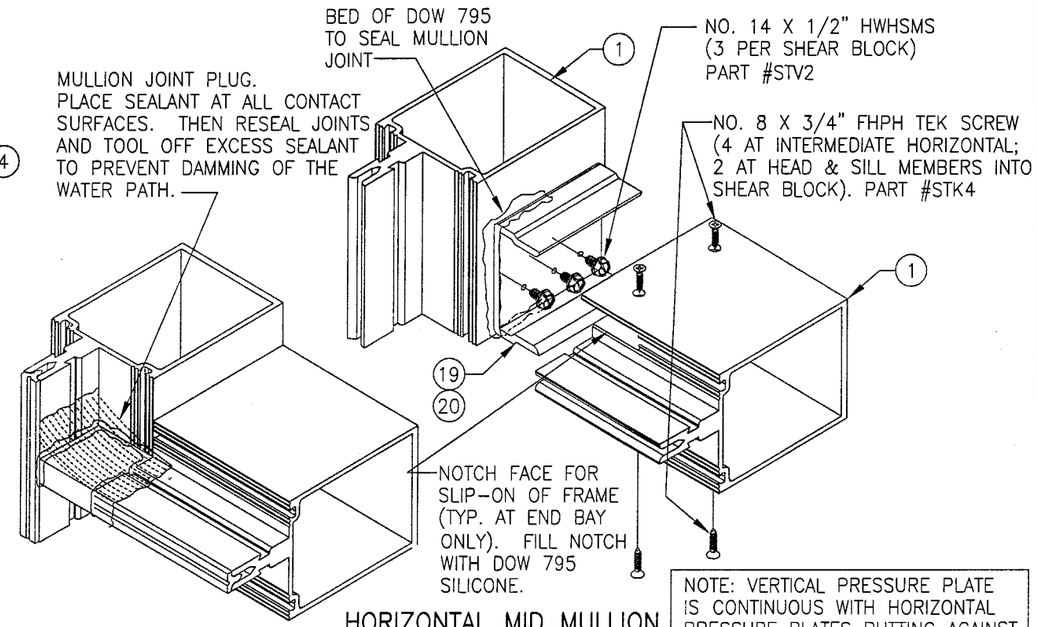

HORIZONTAL MID MULLION TO VERTICAL MULLION

NOTE: VERTICAL PRESSURE PLATE IS CONTINUOUS WITH HORIZONTAL PRESSURE PLATES BUTTING AGAINST THE VERTICAL AND SEALED AT SEAM WITH DOW 795 SILICONE (PRESSURE PLATES NOT SHOWN FOR CLARITY).

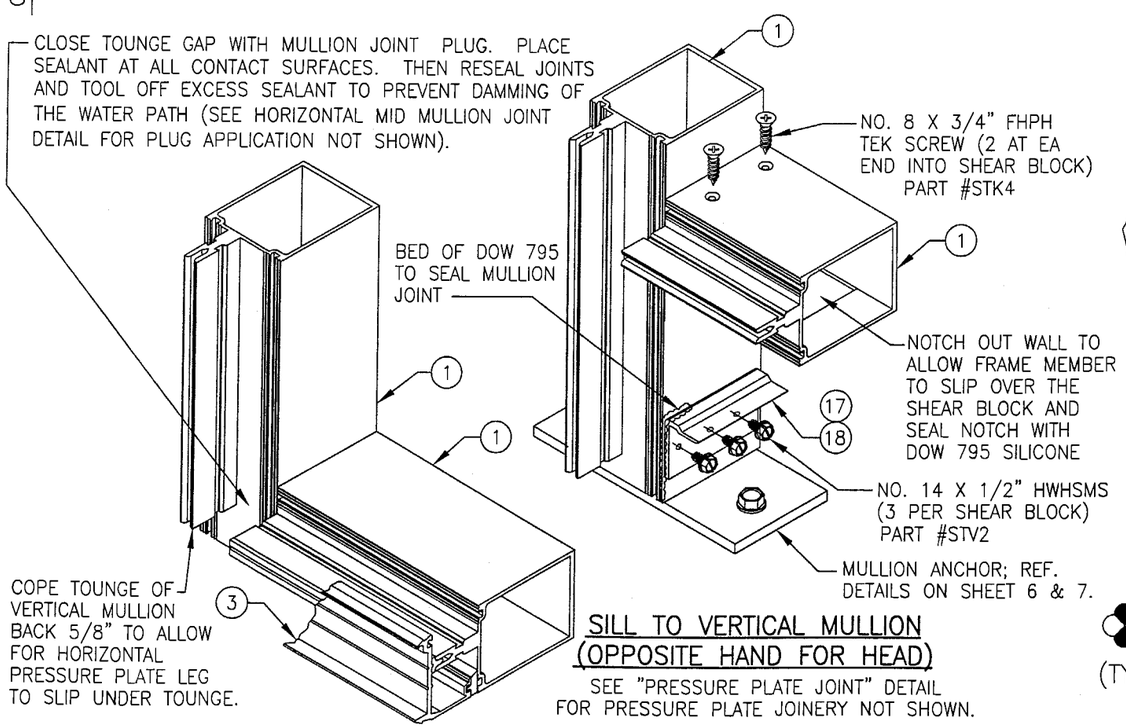

SILL TO VERTICAL MULLION (OPPOSITE HAND FOR HEAD)

SEE "PRESSURE PLATE JOINT" DETAIL FOR PRESSURE PLATE JOINERY NOT SHOWN.

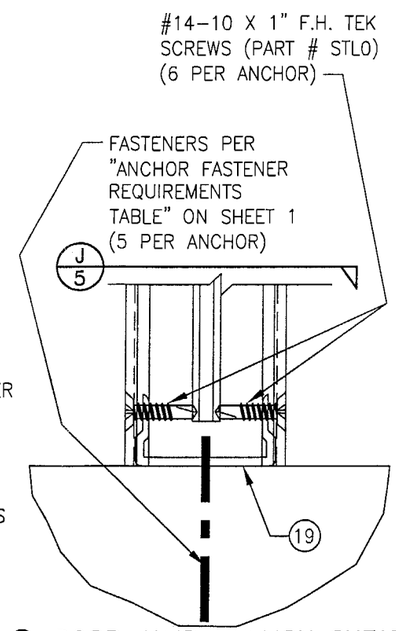

DOOR JAMB MULLION SHEAR BLOCK ANCHOR DETAIL

(TYP. AT ALL DOOR JAMB MULLION ENDS)

NOTE: GLAZING & HORIZONTAL MEMBERS NOT SHOWN FOR CLARITY.

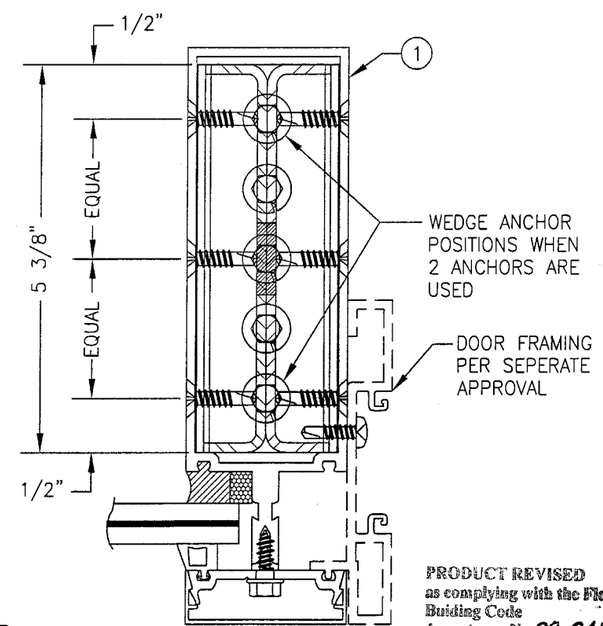

SECTION J/5

SCALE: 1/2 FULL

PRODUCT REVISED
as complying with the Florida Building Code
Acceptance No. 03-0410.03
Expiration Date JUNE 27, 2007
By Manuel Perez
Miami-Dade Product Control Division

DRAWN BY: W.W.S.	CHECKED BY: W.W.S.
PLOT: 1=2	DATE: 01/15/02

NO.	REVISION DESCRIPTION	BY	DATE

DRAWING TITLE
8" DEEP SERIES 5600 SMALL MISSILE IMPACT CURTAIN WALL SYSTEM

MANUFACTURER
EFCO CORPORATION
1000 COUNTY ROAD; P.O. BOX 609
MONETT, MO 65708-0609
800-221-4169

CONSULTANTS
W. W. SCHAEFER ENGINEERING & CONSULTING, P.A.
600 SANDTREE DRIVE; SUITE 203B
PALM BEACH GARDENS, FL 33403
PHONE: 561-775-4902 FAX: 561-775-4903

CERTIFICATION
APR 07 2004
WARREN W. SCHAEFER, P.E.
P.E. NO. 44135

DRAWING NO. 1091 REV. A

SHEET NO. 5 OF 9

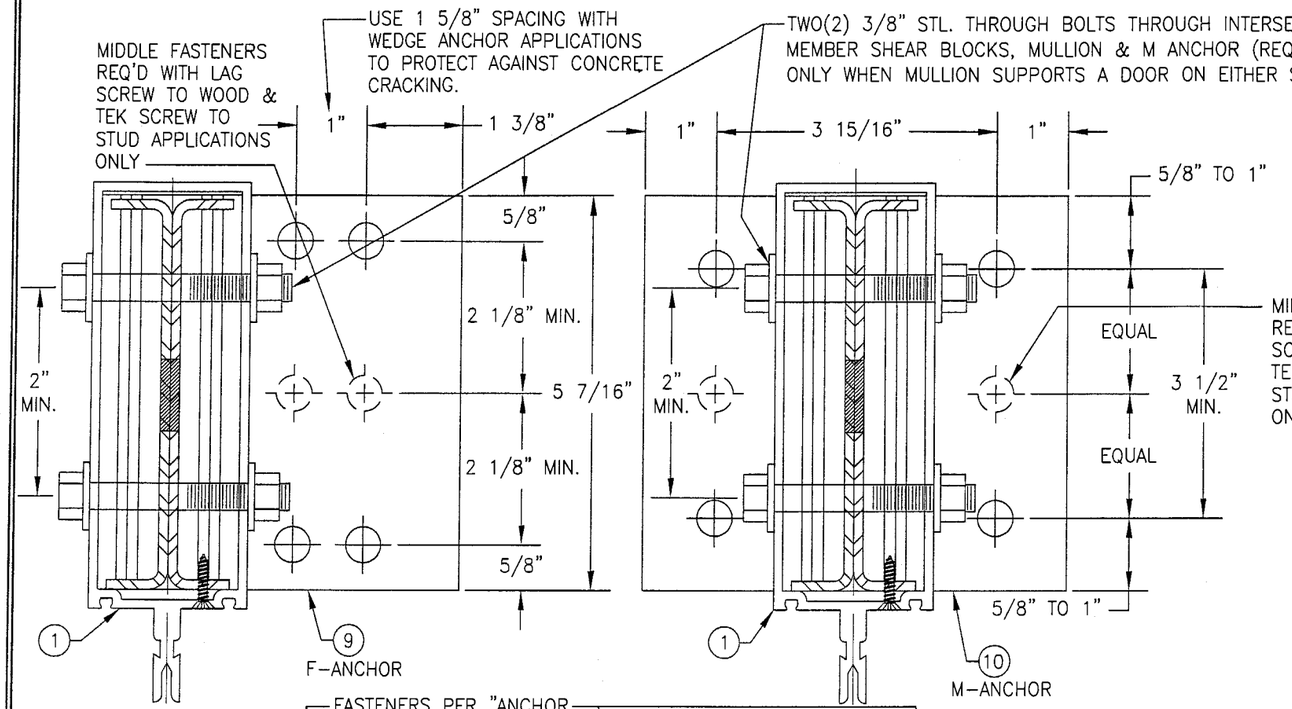

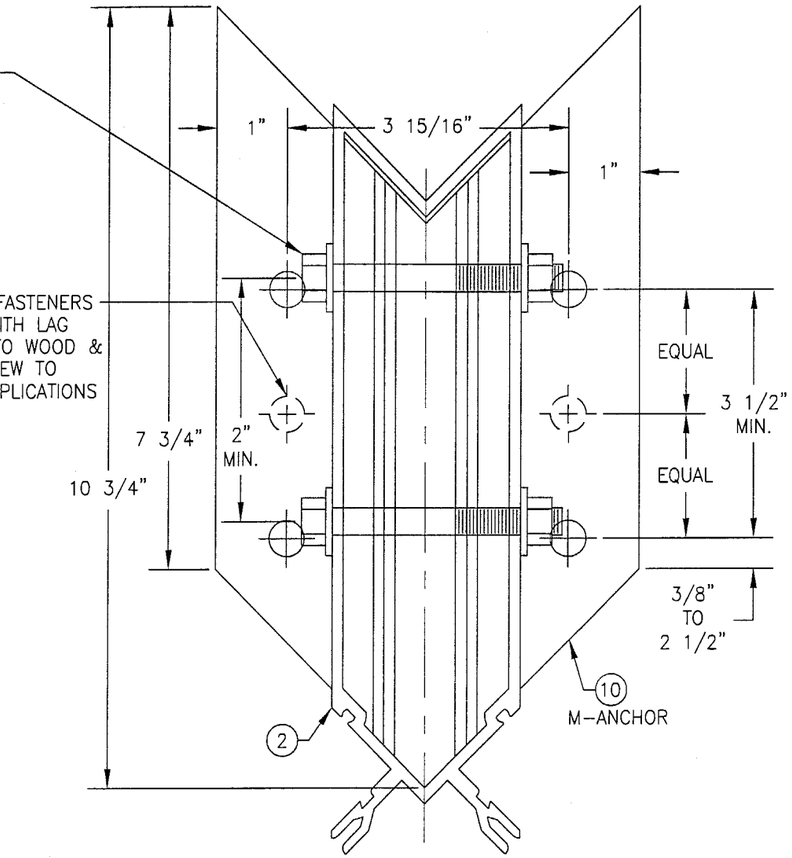

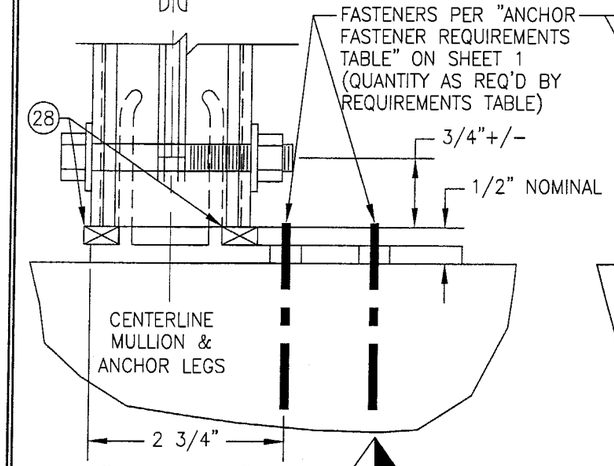

"F-ANCHOR" DETAIL

(TYP. AT SIDE JAMB MULLIONS)

NOTE: GLAZING & HORIZONTAL MEMBER NOT SHOWN FOR CLARITY.

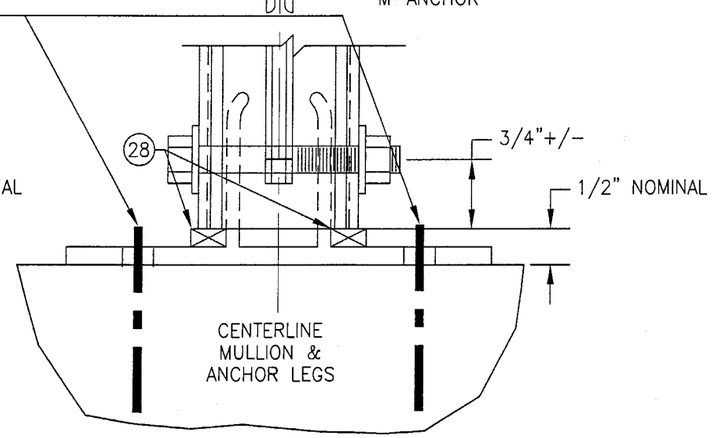

"M-ANCHOR" DETAIL

(TYP. AT INTERMEDIATE MULLIONS)

NOTE: GLAZING & HORIZONTAL MEMBERS NOT SHOWN FOR CLARITY.

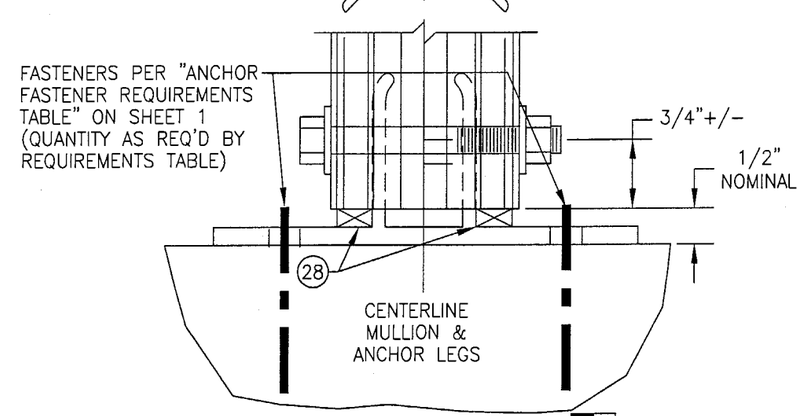

"M-ANCHOR" DETAIL

(TYP. AT CORNER MULLIONS)

NOTE: GLAZING & HORIZONTAL MEMBERS NOT SHOWN FOR CLARITY.

PRODUCT REVISED
as complying with the Florida Building Code
Acceptance No. 03-0410.03
Expiration Date JUNE 27, 2007
By Manuel Perez
Miami Dade Product Control Division

DRAWN BY: W.W.S.	CHECKED BY: W.W.S.
PLOT: 1=2	DATE: 01/15/02

NO.	REVISION DESCRIPTION	BY	DATE

DRAWING TITLE
8" DEEP SERIES 5600 SMALL MISSILE IMPACT CURTAIN WALL SYSTEM

MANUFACTURER
EFCO CORPORATION
1000 COUNTY ROAD; P.O. BOX 609
MONETT, MO 65708-0609
800-221-4169

CONSULTANTS
W. W. SCHAEFER ENGINEERING & CONSULTING, P.A.
600 SANDTREE DRIVE; SUITE 203B
PALM BEACH GARDENS, FL 33403
PHONE: 561-775-4902 FAX: 561-775-4903

CERTIFICATION
APR 07 2004
WARREN W. SCHAEFER, P.E.
P.E. NO. 44135

DRAWING NO. 1091
REV. A
SHEET NO. 6 OF 9

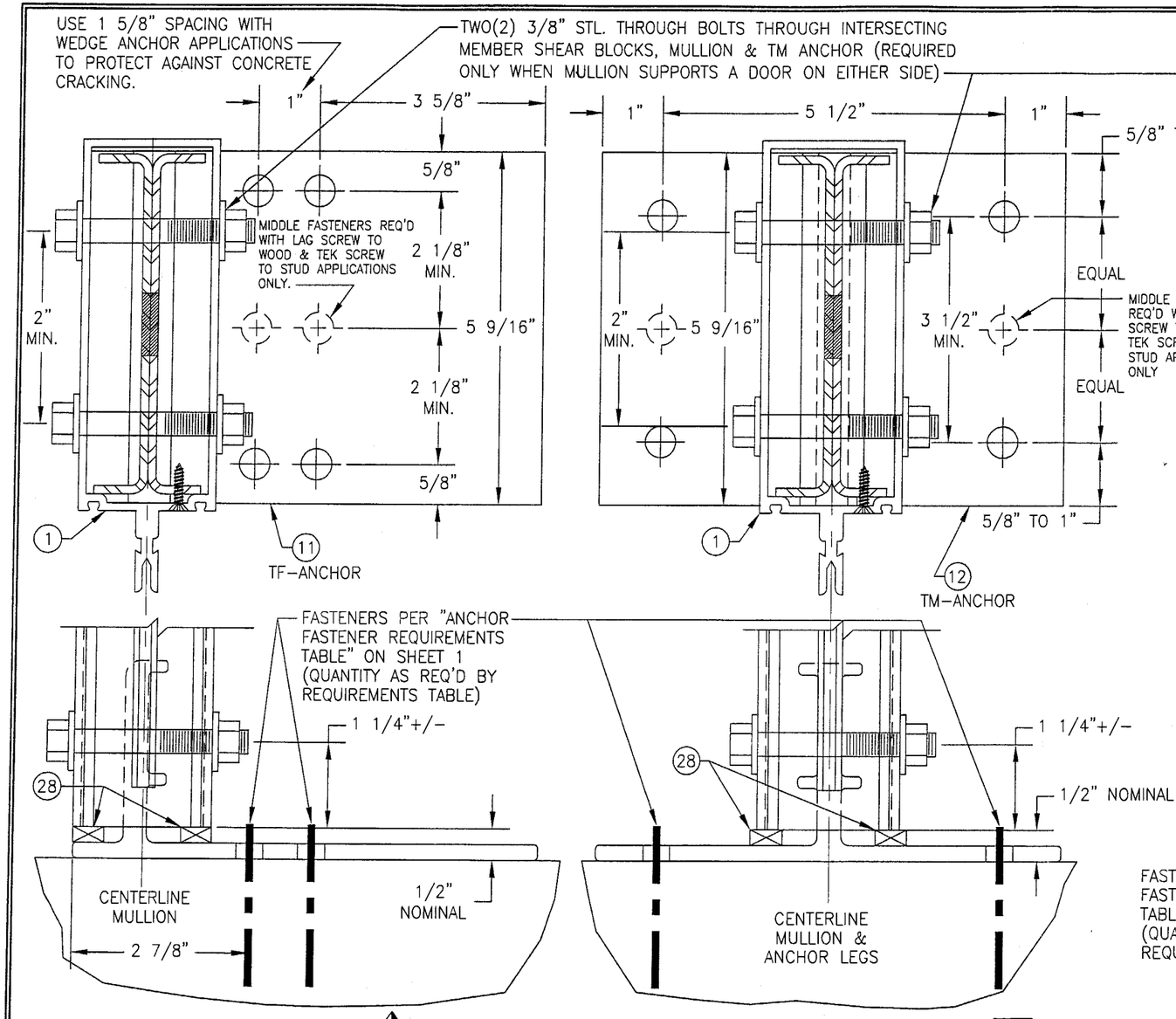

"TF-ANCHOR" DETAIL

(TYP. AT SIDE JAMB MULLIONS)

NOTE: GLAZING & HORIZONTAL MEMBER NOT SHOWN FOR CLARITY.

"TM-ANCHOR" DETAIL

(TYP. AT INTERMEDIATE MULLIONS)

NOTE: GLAZING & HORIZONTAL MEMBERS NOT SHOWN FOR CLARITY.

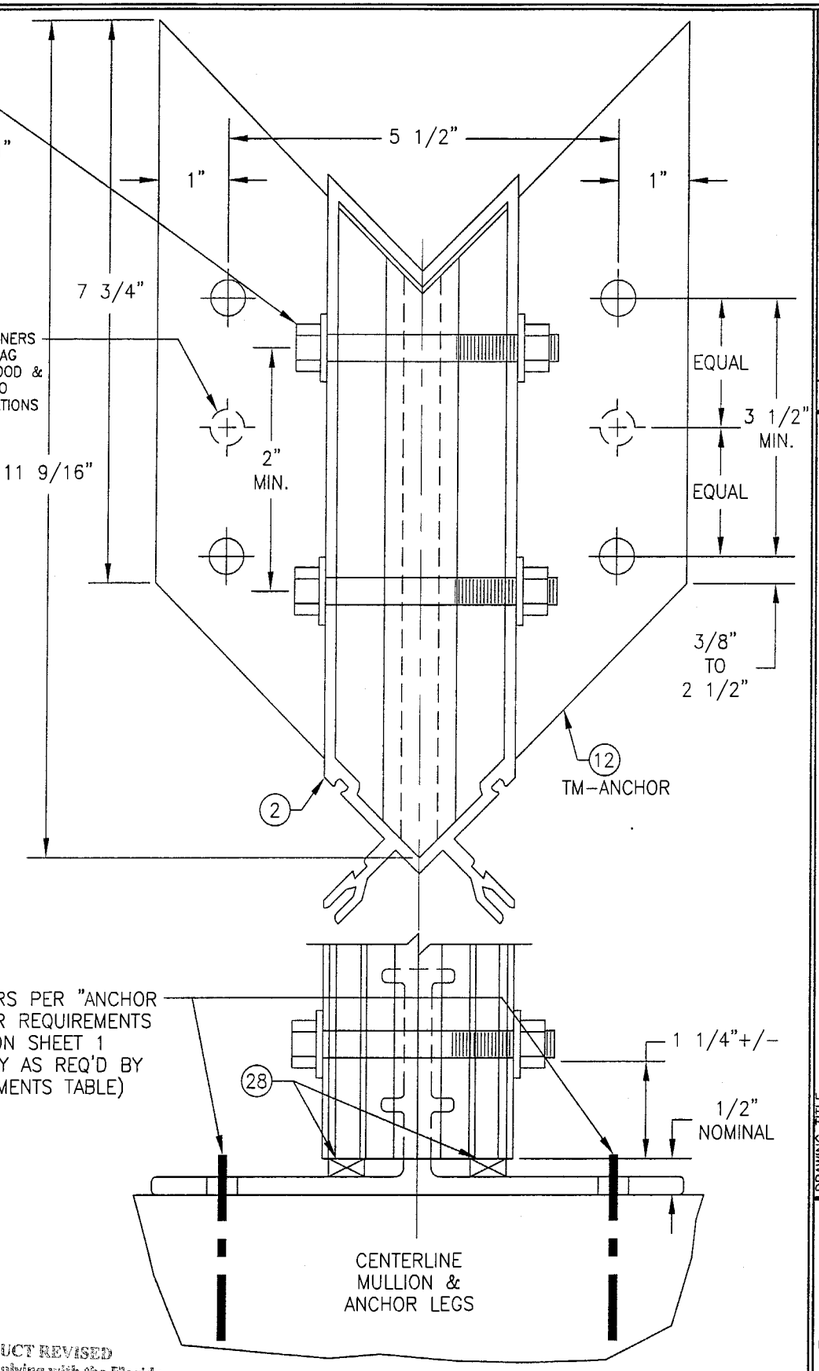

"TM-ANCHOR" DETAIL

NOTE: GLAZING & HORIZONTAL MEMBERS NOT SHOWN FOR CLARITY.

(TYP. AT CORNER MULLIONS)

PRODUCT REVISED
as complying with the Florida Building Code
Acceptance No. 03-0410.03
Expiration Date JUNE 27, 2007
By Manuel Perez
Miami-Dade Product Control Division

DRAWN BY: W.W.S.	CHECKED BY: W.W.S.
PLOT: 1=2	DATE: 01/15/02

NO.	REVISION DESCRIPTION	BY	DATE

DRAWING TITLE
8" DEEP SERIES 5600 SMALL MISSILE IMPACT CURTAIN WALL SYSTEM

MANUFACTURER
EFCO CORPORATION
1000 COUNTY ROAD; P.O. BOX 609
MONETT, MO 65708-0609
800-221-4169

CONSULTANTS
W. W. SCHAEFER ENGINEERING & CONSULTING, P.A.
600 SANDTREE DRIVE; SUITE 203B
PALM BEACH GARDENS, FL 33403
PHONE: 561-775-4902 FAX: 561-775-4903

CERTIFICATION
APR 07 2004
WARREN W. SCHAEFER, P.E.
P.E. NO. 44135

DRAWING NO. 1091 REV. A

SHEET NO. 7 OF 9

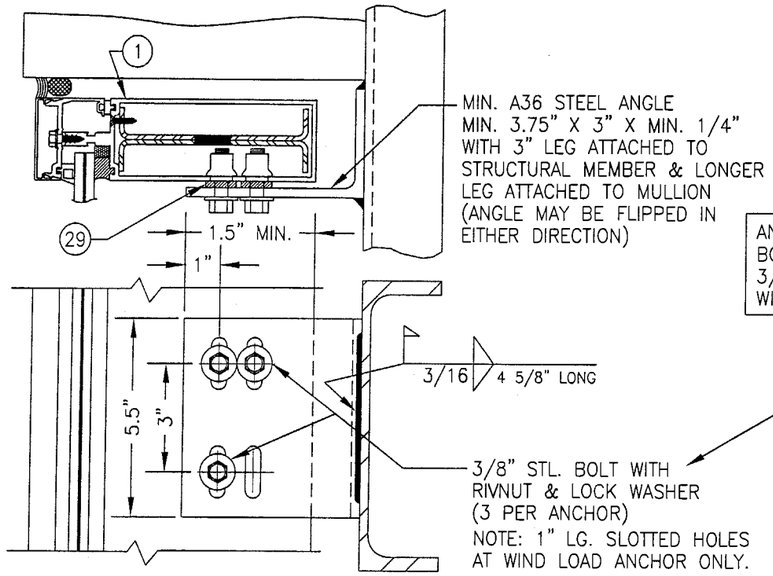

DEAD LOAD & WIND LOAD ANCHOR DETAIL
(TYP. AT JAMB MULLIONS)
(WIND LOAD ANCHOR HAS 1" LONG SLOTS FOR VERTICAL MOVEMENT)

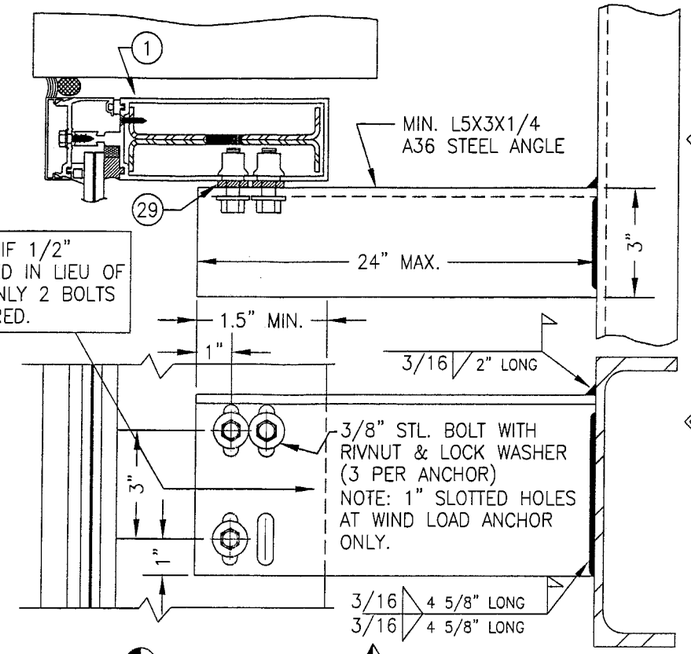

EXTENDED DEAD LOAD & WIND LOAD ANCHOR DETAIL
(TYP. AT JAMB MULLIONS) (WIND LOAD ANCHOR HAS 1" LONG SLOTS FOR VERTICAL MOVEMENT)

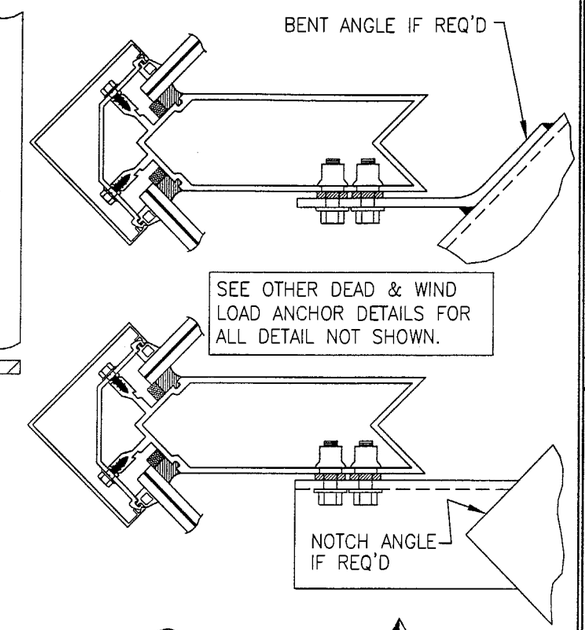

DEAD LOAD & WIND LOAD
ANCHOR DETAIL
(TYP. AT CORNER MULLS)

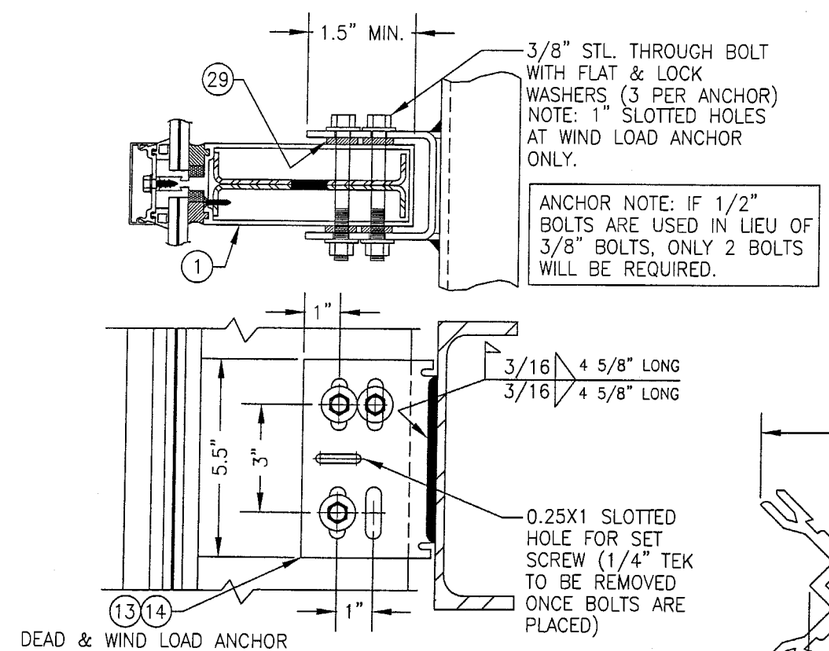

DEAD LOAD & WIND LOAD ANCHOR DETAIL
(TYP. AT INTERMEDIATE MULLIONS)
(WIND LOAD ANCHOR HAS 1" LONG SLOTS FOR VERTICAL MOVEMENT)

NOTE: DEAD LOAD & WIND LOAD ANCHOR DETAILS ARE SAME AT CORNER MULLION.

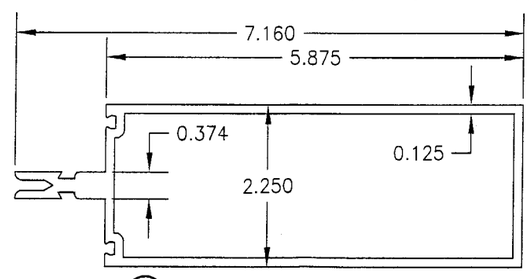

1 JAMB & MIDDLE MULLION

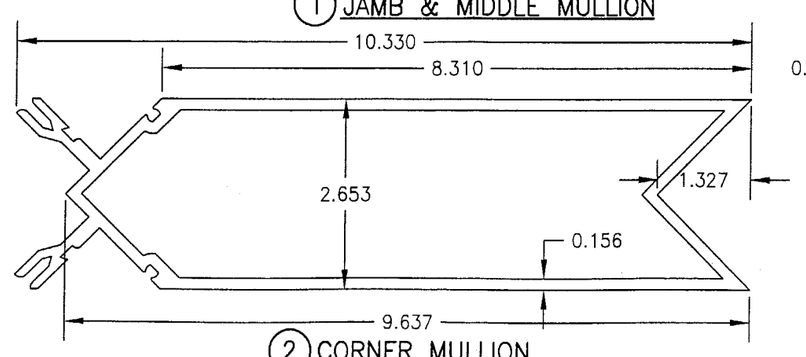

2 CORNER MULLION

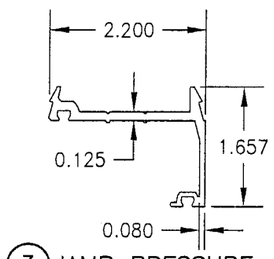

3 JAMB PRESSURE PLATE

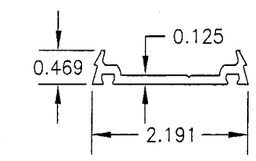

4 MID MULLION PRESSURE PLATE

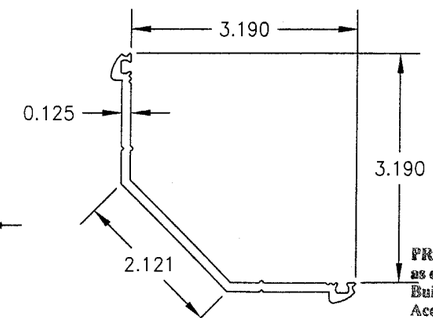

5 CORNER MULL PRESSURE PLATE

PRODUCT REVISED
as complying with the Florida
Building Code
Acceptance No. 03-0410.03
Expiration Date JUNE 27, 2007
By Manuel Perez
Miami-Dade Product Control
Division

DRAWN BY: W.W.S.	CHECKED BY: W.W.S.
PLOT: 1=2	DATE: 01/15/02

NO.	REVISION DESCRIPTION	BY	DATE

DRAWING TITLE
8" DEEP SERIES 5600 SMALL MISSILE IMPACT CURTAIN WALL SYSTEM

MANUFACTURER
EFCO CORPORATION
1000 COUNTY ROAD; P.O. BOX 609
MONETT, MO 65708-0609
800-221-4169

CONSULTANTS
W. W. SCHAEFER ENGINEERING & CONSULTING, P.A.
600 SANDTREE DRIVE; SUITE 203B
PALM BEACH GARDENS, FL 33403
PHONE: 561-775-4902 FAX: 561-775-4903

CERTIFICATION
APR 07 2004
WARREN W. SCHAEFER, P.E.
P.E. NO. 44135

DRAWING NO. 1091
REV. A
SHEET NO. 8 OF 9

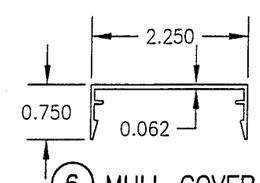

6 MULL COVER

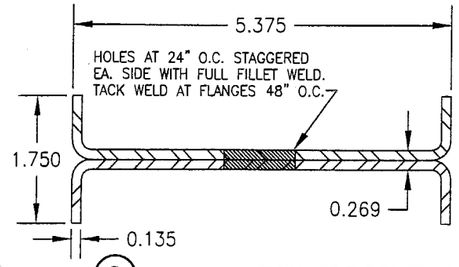

8 MULLION REINFORCEMENT

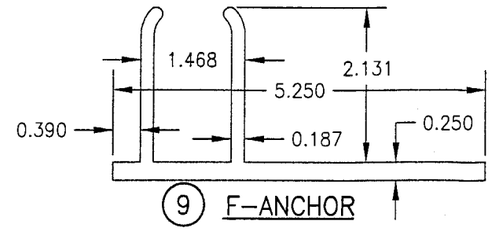

9 F-ANCHOR

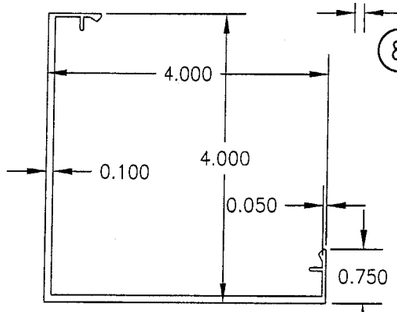

7 CORNER MULL COVER

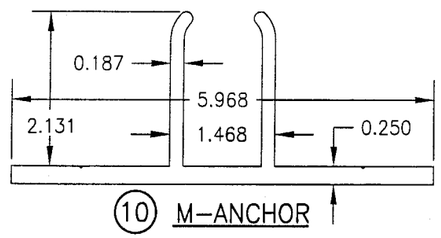

10 M-ANCHOR

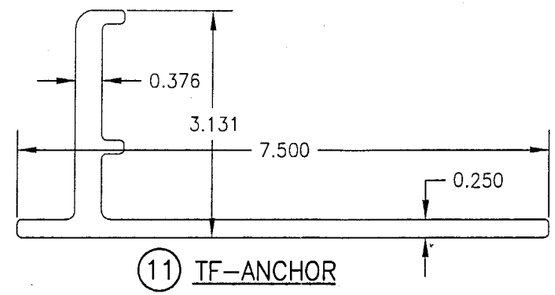

11 TF-ANCHOR

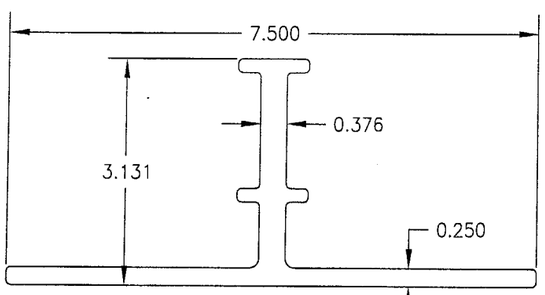

12 TM-ANCHOR

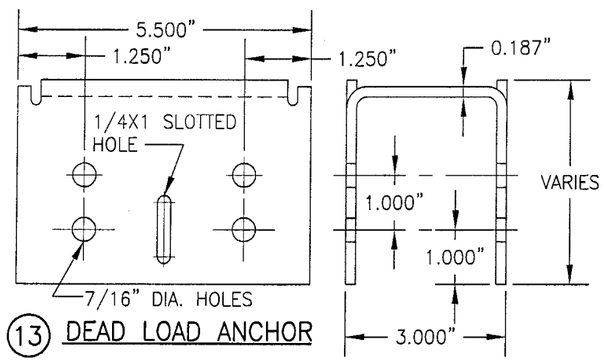

13 DEAD LOAD ANCHOR

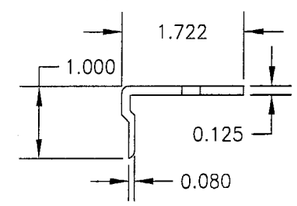

17 18 HEAD/SILL SHEAR BLOCK

LENGTH = 5.375" @ MID & JAMB MULLS & 8.563" @ CORNER MULLS (ENDS ARE MITERED 45 DEG. AT CORNER MULLIONS)

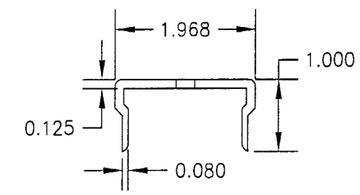

19 20 MID MULL SHEAR BLOCK & DOOR JAMB MULL SHEAR BLOCK ANCHOR

LENGTH = 5.375" @ MID & JAMB MULLS & 8.563" @ CORNER MULLS (ENDS ARE MITERED 45 DEG. AT CORNER MULLIONS)

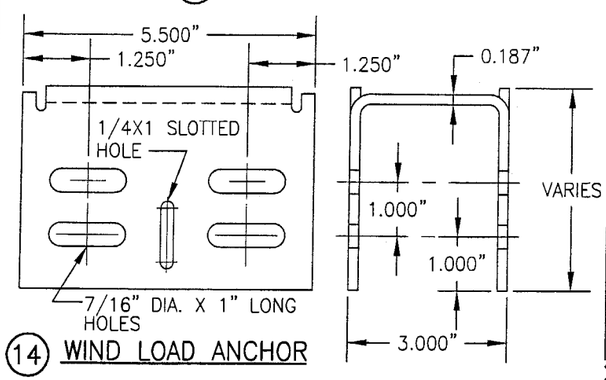

14 WIND LOAD ANCHOR

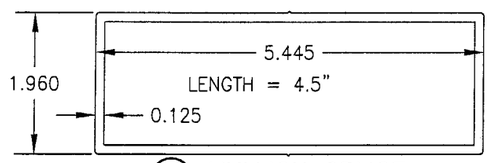

15 MULLION SPLICE

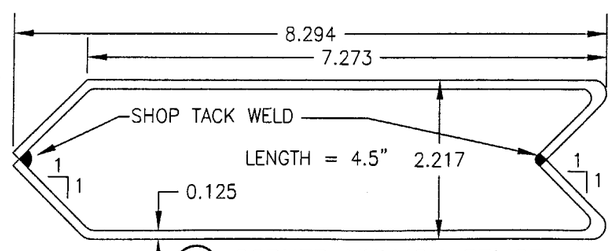

16 CORNER MULLION SPLICE

ITEM #	PART	ITEM DESCRIPTION	MANUFACTURER/NOTES
		PARTS	
1	6095	JAMB & MIDDLE MULLION	EFCO; 6063-T6 ALUMINUM
2	6217	CORNER MULLION	EFCO; 6063-T6 ALUMINUM
3	5977	JAMB PRESSURE PLATE	EFCO; 6063-T6 ALUMINUM
4	5959	MIDDLE MULLION PRESSURE PLATE	EFCO; 6063-T6 ALUMINUM
5	5904	CORNER MULLION PRESSURE PLATE	EFCO; 6063-T6 ALUMINUM
6	5882	MULLION COVER	EFCO; 6063-T6 ALUMINUM
7	5905	CORNER MULLION COVER	EFCO; 6063-T6 ALUMINUM
8	SR6095A	DOUBLE CHANNEL MULL REINF.	EFCO; A36 MIN. STEEL
9	5878	F-ANCHOR	EFCO; 6063-T6 ALUMINUM
10	4026	M-ANCHOR	EFCO; 6063-T6 ALUMINUM
11	3709	TF ANCHOR	EFCO; 6063-T6 ALUMINUM
12	3708	TM ANCHOR	EFCO; 6063-T6 ALUMINUM
13	–	DEAD LOAD ANCHOR	EFCO; A36 MIN. STEEL
14	–	WIND LOAD ANCHOR	EFCO; A36 MIN. STEEL
15	5099	MULLION SPLICE	EFCO; 6063-T6 ALUMINUM
16	KY71	CORNER MULLION SPLICE	EFCO; A36 MIN. STEEL
17	KY51/KY52 6333	HEAD/SILL SHEAR BLOCK	EFCO; 6063-T6 ALUMINUM
18	KZ64/KZ65 6333	HEAD/SILL SHEAR BLOCK (CORNER MULL)	EFCO; 6063-T6 ALUMINUM
19	KW04/5879	MID MULL & JAMB MULL SHEAR BLOCK	EFCO; 6063-T6 ALUMINUM
20	KZ66/5879	MID MULL SHEAR BLOCK (CORNER MULL)	EFCO; 6063-T6 ALUMINUM
		SEALS, SEALANTS & SHIMS	
21	WEP7	3/16" SILICONE SPACER	EPG
22A	W163	3/8" PRESET PEROXIDE CURE EPDM	EPG
22B	W162	7/16" PRESET PEROXIDE CURE EPDM	EPG
23	WM88	5/16" X 7/16" V2100	NORTON
24	HN16	0.187" X 0.812" X 4" GLAZING BLOCK	EPG
25	WNC8	1/8" PRESET 70 DUROMETER EPDM	EPG
26	WM87	5/16" X 1/4" V2100	NORTON
27	HN91	0.187" X 1.0" X 4" GLAZING BLOCK	EPG
28	HS01	POLYSTRENE SHIM	FALMOUTH PLASTIC
29	HS01	POLYSTRENE SHIM	FALMOUTH PLASTIC
		MISCELLANEOUS FASTENERS	
30	STC0	13-16 X 5/8" HWH S.S. SMS SCREW	6" O.C.
31	SPC0	NO. 8 X 3/4 PL FH SMS SCREW	3/MULL REINFORCEMENT SECTION

PRODUCT REVISED
as complying with the Florida
Building Code
Acceptance No. 03-0410.03
Expiration Date JUNE 27, 2007
By Manuel Diaz
Miami Dade Product Control
Division

NO.	REVISION DESCRIPTION	BY	DATE

DRAWN BY: W.W.S. | CHECKED BY: W.W.S.
PLOT: 1=2 | DATE: 01/15/02

DRAWING TITLE
8" DEEP SERIES 5600 SMALL MISSILE IMPACT CURTAIN WALL SYSTEM

MANUFACTURER
EFCO CORPORATION
1000 COUNTY ROAD; P.O. BOX 609
MONETT, MO 65708-0609
800-221-4169

CONSULTANTS
W. W. SCHAEFER ENGINEERING & CONSULTING, P.A.
600 SANDTREE DRIVE; SUITE 203B
PALM BEACH GARDENS, FL 33403
PHONE: 561-775-4902 FAX: 561-775-4903

CERTIFICATION
APR 27 2004
WARREN W. SCHAEFER, P.E.
P.E. NO. 44135

DRAWING NO. 1091 | REV. A
SHEET NO. 9 OF 9