MIAMI-DADE

BUILDING CODE COMPLIANCE OFFICE (BCCO)
PRODUCT CONTROL DIVISION

**MIAMI-DADE** COUNTY, FLORIDA
METRO-DADE FLAGLER BUILDING
**140 WEST FLAGLER STREET, SUITE 1603**
MIAMI, FLORIDA 33130-1563
(305) 375-2901 FAX (305) 375-2908

# NOTICE OF ACCEPTANCE (NOA)

**Simonton Building Products, Inc.**
**(dba Simonton Windows)**
**1 Cochrane Avenue**
**Pennsboro, WV 26415**

**SCOPE:**
This NOA is being issued under the applicable rules and regulations governing the use of construction materials. The documentation submitted has been reviewed by Miami-Dade County Product Control Division and accepted by the Board of Rules and Appeals (BORA) to be used in Miami Dade County and other areas where allowed by the Authority Having Jurisdiction (AHJ).

This NOA shall not be valid after the expiration date stated below. The Miami-Dade County Product Control Division (In Miami Dade County) and/or the AHJ (in areas other than Miami Dade County) reserve the right to have this product or material tested for quality assurance purposes. If this product or material fails to perform in the accepted manner, the manufacturer will incur the expense of such testing and the AHJ may immediately revoke, modify, or suspend the use of such product or material within their jurisdiction. BORA reserves the right to revoke this acceptance, if it is determined by Miami-Dade County Product Control Division that this product or material fails to meet the requirements of the applicable building code.

This product is approved as described herein, and has been designed to comply with the Florida Building Code, including High Velocity Hurricane Zone of the Florida Building Code.

**DESCRIPTION: Series "O02/O02" Aluminum Sliding Glass Door (OX)-Impact**

**APPROVAL DOCUMENT:** Drawing No. **Dade-125C,** titled "O02/O02 Storm Breaker Plus", sheets 1 through 5 of 5, prepared by manufacturer, dated 1/9/03 and last revision C dated 5/17/04, signed and sealed by Charles A. Pagen, P.E., bearing the Miami-Dade County Product Control Approval stamp with the Notice of Acceptance number and Approval date by the Miami-Dade County Product Control Division.

**MISSILE IMPACT RATING: Large Missile Impact Resistant**

**LABELING:** Each unit shall bear a permanent label with the manufacturer's name or logo, city, state and following statement: "Miami-Dade County Product Control Approved", unless otherwise noted herein.

**RENEWAL** of this NOA shall be considered after a renewal application has been filed and there has been no change in the applicable building code negatively affecting the performance of this product.

**TERMINATION** of this NOA will occur after the expiration date or if there has been a revision or change in the materials, use, and/or manufacture of the product or process. Misuse of this NOA as an endorsement of any product, for sales, advertising or any other purposes shall automatically terminate this NOA. Failure to comply with any section of this NOA shall be cause for termination and removal of NOA.

**ADVERTISEMENT:** The NOA number preceded by the words Miami-Dade County, Florida, and followed by the expiration date may be displayed in advertising literature. If any portion of the NOA is displayed, then it shall be done in its entirety.

**INSPECTION:** A copy of this entire NOA shall be provided to the user by the manufacturer or its distributors and shall be available for inspection at the job site at the request of the Building Official.
This NOA consists of this page 1 and evidence sheets E-1 & E-2, as well as approval document mentioned above.
The submitted documentation was reviewed by **Ishaq I. Chanda, P.E.**

PRODUCT CONTROL ACCEPTED

6/4/14

**Simonton Building Products, Inc.**
(dba Simonton Windows)

## NOTICE OF ACCEPTANCE: EVIDENCE SUBMITTED

### A. DRAWINGS

1. Manufacturer's die drawings and sections.
   (Original documents transferred from unapproved Norandex file # **03-0206.14)**
2. Drawing No. **Dade-125C,** titled "O02/O02 Storm Breaker Plus", sheets 1 through 5 of 5, prepared by manufacturer, dated 1/9/03 and last revision C dated 5/17/04, signed and sealed by Charles A. Pagen, P.E.

### B. TESTS (Original test reports transferred from unapproved Norandex file # **03-0206.14)**

1. Test reports on 1) Air Infiltration Test, per FBC, TAS 202-94
   2) Uniform Static Air Pressure Test, Loading per FBC,TAS 202-94
   3) Water Resistance Test, per FBC, TAS 202-94
   4) Forced Entry Test, per FBC 2411 3.2.1 and TAS 202-94
   5) Large Missile impact Test per FBC, TAS 201-94
   6) Cyclic Wind Pressure Loading per FBC, TAS 203-94

   Along with marked-up drawings and installation diagram of aluminum sliding glass door (OX), prepared by Certified Testing Laboratories, Test Report No.**CTLA-962W**, dated November 06, 2002, signed and sealed by Ramesh Patel, P.E. (Note sheet 2, 3 and 4 of the test report was revised by Certified Testing Lab, signed and sealed by Ramesh Patel, P.E.and further addendum letter dated 3-28-03 issued by Certified Testing Lab, signed and sealed by Ramesh Patel, P. E.)

### C. CALCULATIONS (Original calcs transferred from unapproved Norandex file # **03-0206.14)**

1. Anchor verification and performance analysis dated 1/17/03 and last revised on 3/24/03, prepared, signed and sealed by Charles A. Pagen, P.E.
2. Glazing complies w/ASTME-1300-98.

### D. QUALITY ASSURANCE BY:

1. Miami-Dade Building Code Compliance Office.

### E. MATERIAL CERTIFICATIONS

1. Notice of Acceptance No. **03-0421.01,** issued to Solutia Inc, for "Saflex HP", expiring April 14, 2008.

### F. STATEMENTS

1. Court order case #00-0387(JFK), dated 01-27-2003, asset sell and purchase agreement between Exterior System Inc (Seller) and Simonton Building Products (Buyer).
2. State of Delaware certification dated 27 th December 1999, confirming corporation organization and existing of "Norandex Inc" under the name of "Exterior System Inc." under the law of State of Delaware.
3. State of Florida certification dated April 29, 2003, confirming Simonton Building Products Florida Inc, corporation organized under the law of West Virginia, authorized to transfer business in the State of Florida.

Ishaq I. Chanda

**Ishaq I. Chanda, P.E.**
**Product Control Examiner**
**NOA No 03-0415.02**
**Expiration Date: June 24, 2009**
**Approval Date: June 24, 2004**

## NOTICE OF ACCEPTANCE: EVIDENCE SUBMITTED

4. Statement letter dated March 25, 2003, issued by Norandex Building Products requesting" transfer and Name change of existing NOA(s) / Pending files due to sale of asset of Exterior System Inc (dba Norandex/Reynolds) to Simonton Building Products. Norandex Inc also stipulated that the product will no longer manufactured by them and all Rights of NOA(s), being sold to Simonton Building Products, signed by D. J. Screiner, VP-Operation.
5. Un-dated letter issued by Simonton Windows requesting the Norandex Building Products, currently existing NOA(s)/ pending files be transferred to the name of Simonton Windows, signed by Chuck Anderson, P. E. Regulatory Manager.
6. Statement letter of conformance and "No financial interest", dated 01-17-03, signed and sealed by Charles A. Pagen, P.E.
7. Statement of compliance, issued as part of above referenced test report by Certified Testing Laboratories Inc.

**G. OTHER**

1. Unapproved pending **Norandex Building Products** file # **03-0206.14**.

Ishaq I. Chanda

**Ishaq I. Chanda, P.E.**
**Product Control Examiner**
**NOA No 03-0415.02**
**Expiration Date: June 24, 2009**
**Approval Date: June 24, 2004**

| REV. #: | REVISIONS: | REVISED BY: | DATE: |
|---|---|---|---|
| A | REVISED PER DADE MARKUP | RAE | 3/24/03 |
| B | REV FMT TO SIMONTON | RAE | 4/03 |
| C | REVISED PER DADE MARKUP | RLK | 3/23/04 |
| . | . | . | . |
| . | . | . | . |

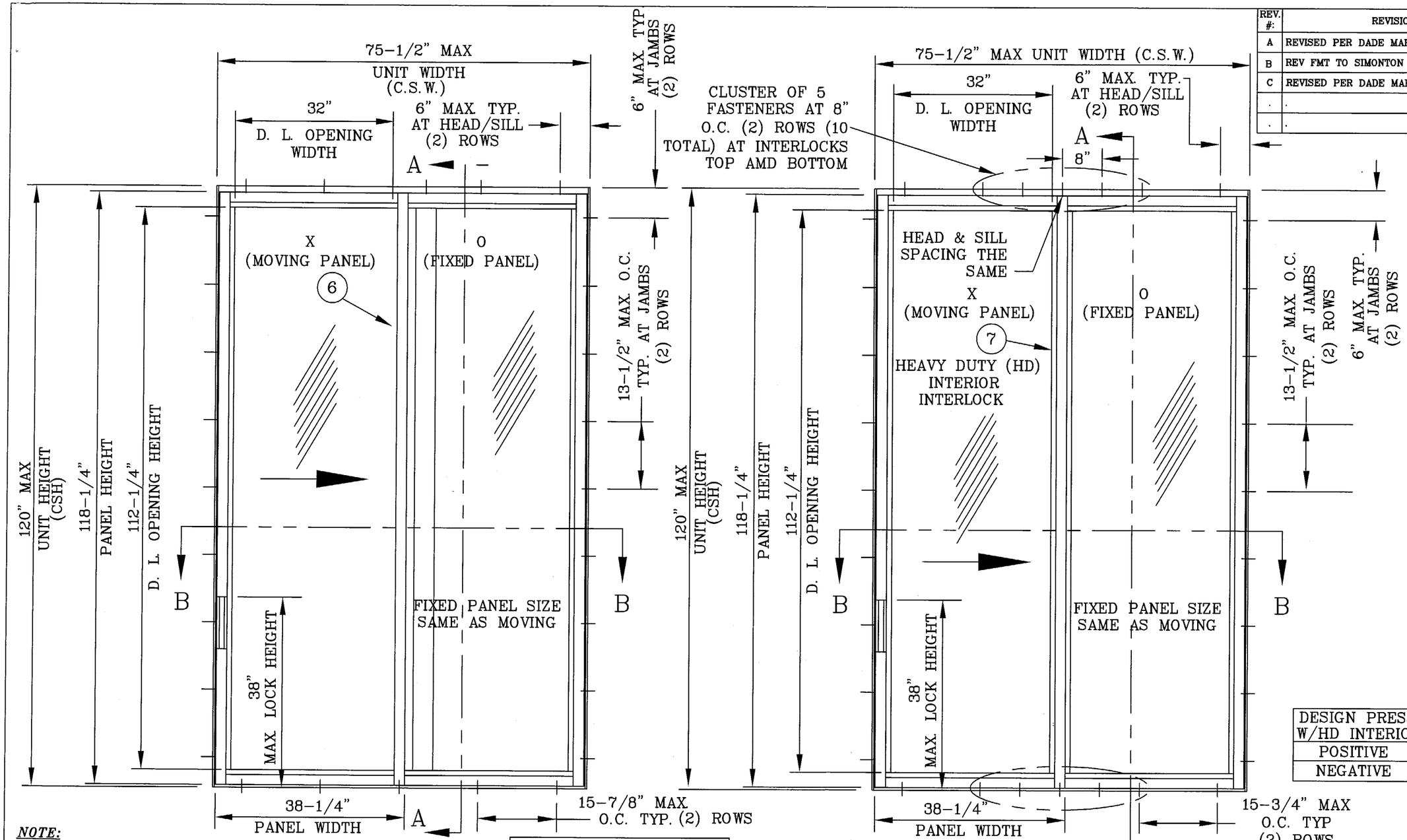


| DESIGN PRESSURE RATING W/HD INTERIOR INTERLOCK | |
|---|---|
| POSITIVE | + 60 PSF |
| NEGATIVE | - 60 PSF |

| DESIGN PRESSURE RATING | |
|---|---|
| POSITIVE | + 40 PSF |
| NEGATIVE | - 40 PSF |

*IMPACT RESISTANT*

***NOTE:***

1. *THIS SLIDING GLASS DOOR SYSTEM IS DESIGNED AND TESTED TO COMPLY WITH THE REQUIREMENTS OF THE FLORIDA BUILING CODE (FBC) 2001 AND PROTOCOLS TAS 201, TAS 202, & TAS 203-94.*
2. *ALL EXTRUSIONS ARE ALUMINUM, 6063-T5 ALLOY, WITH A MINIMUM Fy OF 16,000 P.S.I. U.N.O..*
3. *BASED ON LABORATORY TEST REPORT NUMBER CTLA-962W CERTIFIED TESTING LABORATORIES.*
4. *WOOD BUCKS (BY OTHERS) MUST BE DESIGNED TO CARRY DOOR WIND LOADS IMPOSED ON THEM AND MUST BE REVIEWD BY THE BUILDING OFFICIAL.*
5. *FRAME AND PANEL CORNERS SEALED WITH SCHNEE-MOREHEAD 5504 WHITE JOINT SEALER.*

**Approved as complying with the Florida Building Code**
**Date** JUNE 24, 2004
**NOA#** 03-0415.02
**Miami Dade Product Control Division**
**By** Shaq I. Chanda

CHARLES A. PAGEN, P.E.
FL REG ENG #49121
5/17/04

SIMONTON® WINDOWS
Corporate Headquarters
1 Cochrane Avenue
Pennsboro, WV 26415

Manufacturing Plant
4504 30th Street, West
Bradenton, FL 34207

| | | | | |
|---|---|---|---|---|
| SCALE: NTS | SHEET: 1 OF 5 | | DRAWN BY: RLK | DATE: 1/9/03 |
| SIZE: B | DRAWING NO: DADE-125C | REV: C | CHECKED BY: LNJ | DATE: 1/9/03 |
| FILE: DADE-125C | | | APPRV'D BY: CP | DATE: 1/9/03 |

SERIES: 002/002
STORMBREAKER PLUS SLIDING GL DOOR

TITLE:
ALUMINUM IMPACT RESISTANT 10' SGD
(XO(REVERSIBLE)) 2 PANEL ELEVATIONS

| REV. #: | REVISIONS: | REVISED BY: | DATE: |
|---|---|---|---|
| A | REVISED PER DADE MARKUP | RAE | 3/24/03 |
| B | REV FMT TO SIMONTON | RAE | 4/03 |
| C | REVISED PER DADE MARKUP | RLK | 3/23/04 |
| . | . | . | . |
| . | . | . | . |

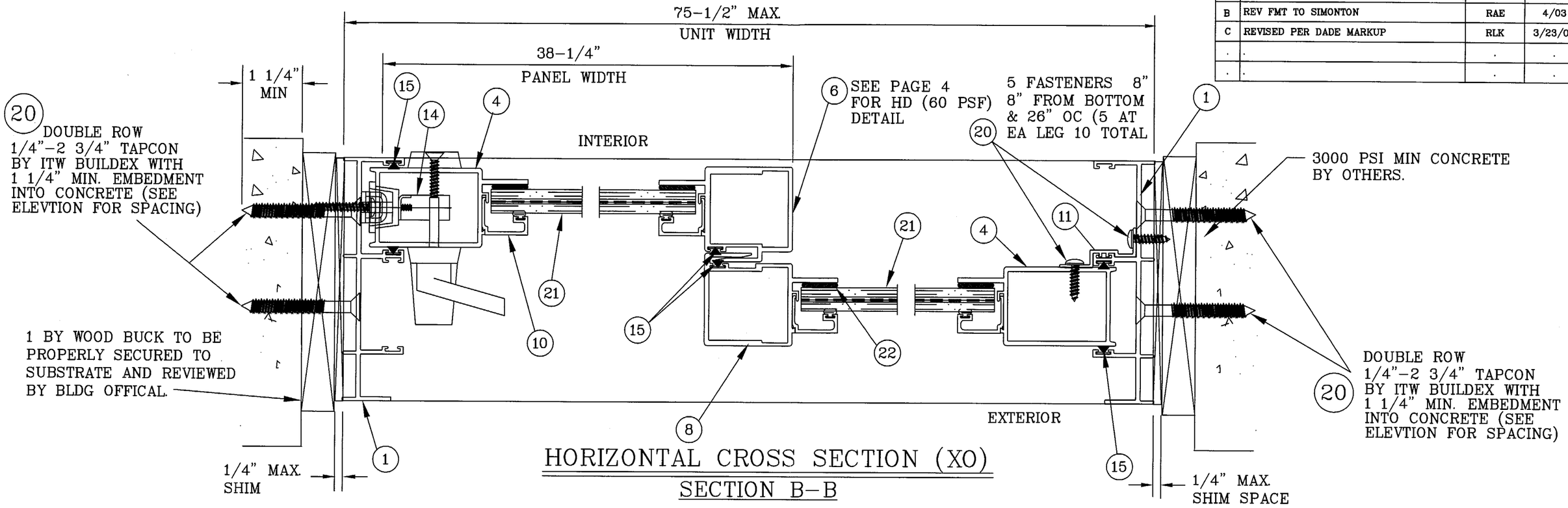


## HORIZONTAL CROSS SECTION (XO)

## SECTION B-B

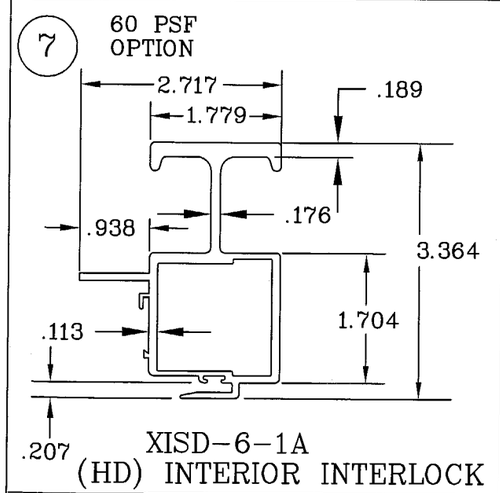


XISD-6-1A
(HD) INTERIOR INTERLOCK

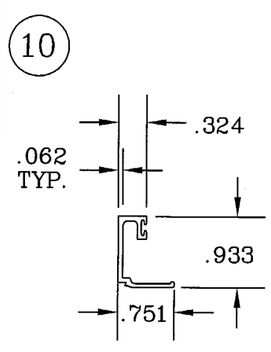


XISD-10
3/8" GLAZING BEAD

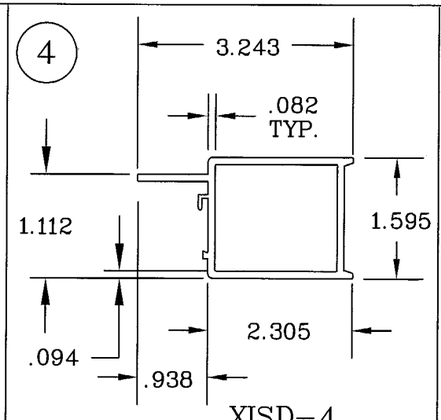


XISD-4
LOCK STILE AND JAMB STILE

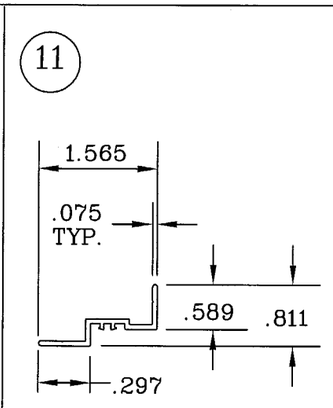


XISD-11
FIXED PANEL CLIP

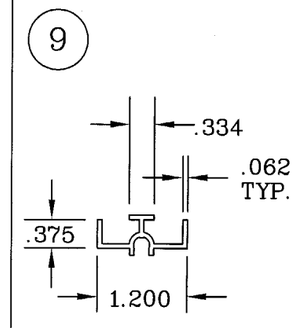


XISD-8
FIXED BOTTOM RAIL ADPT

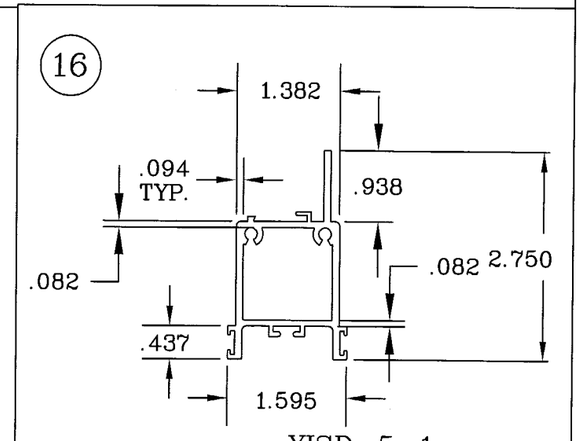


XISD-5-1
FIXED PANEL BOTTOM RAIL

UNLESS OTHERWISE SPECIFIED ALL DIMENSIONS ARE IN INCHES

Approved as complying with the Florida Building Code
Date JUNE 24, 2004
NOA# 03-0415.02
Miami Dade Product Control Division
By Shaq I. Chanda

C A Pagen
CHARLES A. PAGEN, P.E.
FL REG ENG #49121
5/17/04

SIMONTON® WINDOWS
Corporate Headquarters
1 Cochrane Avenue
Pennsboro, WV 26415

Manufacturing Plant
4504 30th Street, West
Bradenton, FL 34207

| SCALE: NTS | SHEET: 2 OF 5 | | DRAWN BY: RLK | DATE: 1/9/03 |
|---|---|---|---|---|
| SIZE: B | DRAWING NO: DADE-125C | REV: C | CHECKED BY: LNJ | DATE: 1/9/03 |
| FILE: DADE-125C | | | APPRV'D BY: CP | DATE: 1/9/03 |

SERIES: 002/002
STORMBREAKER PLUS SLIDING GL DOOR

TITLE:
ALUMINUM IMPACT RESISTANT 10' SGD (XO(REVERSIBLE)) CROSS SECTIONS

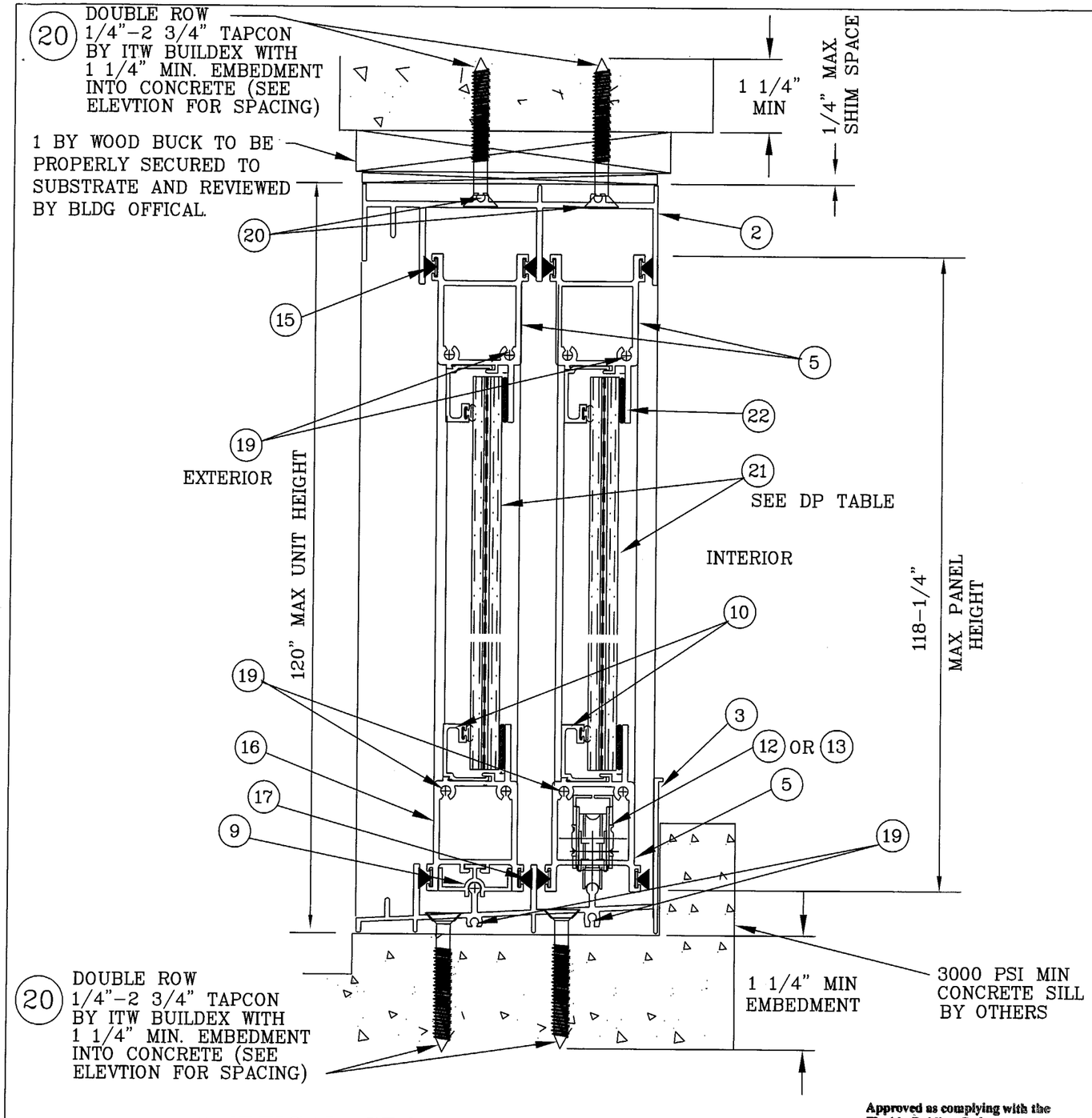


## VERTICAL CROSS SECTION

## SECTION A-A

| | REVISIONS: | REVISED BY: | DATE: |
|---|---|---|---|
| A | REVISED PER DADE MARKUP | RAE | 3/24/03 |
| B | REV FMT TO SIMONTON | RAE | 4/03 |
| C | REVISED PER DADE MARKUP | RLK | 3/23/04 |
| | . | . | . |
| | . | . | . |

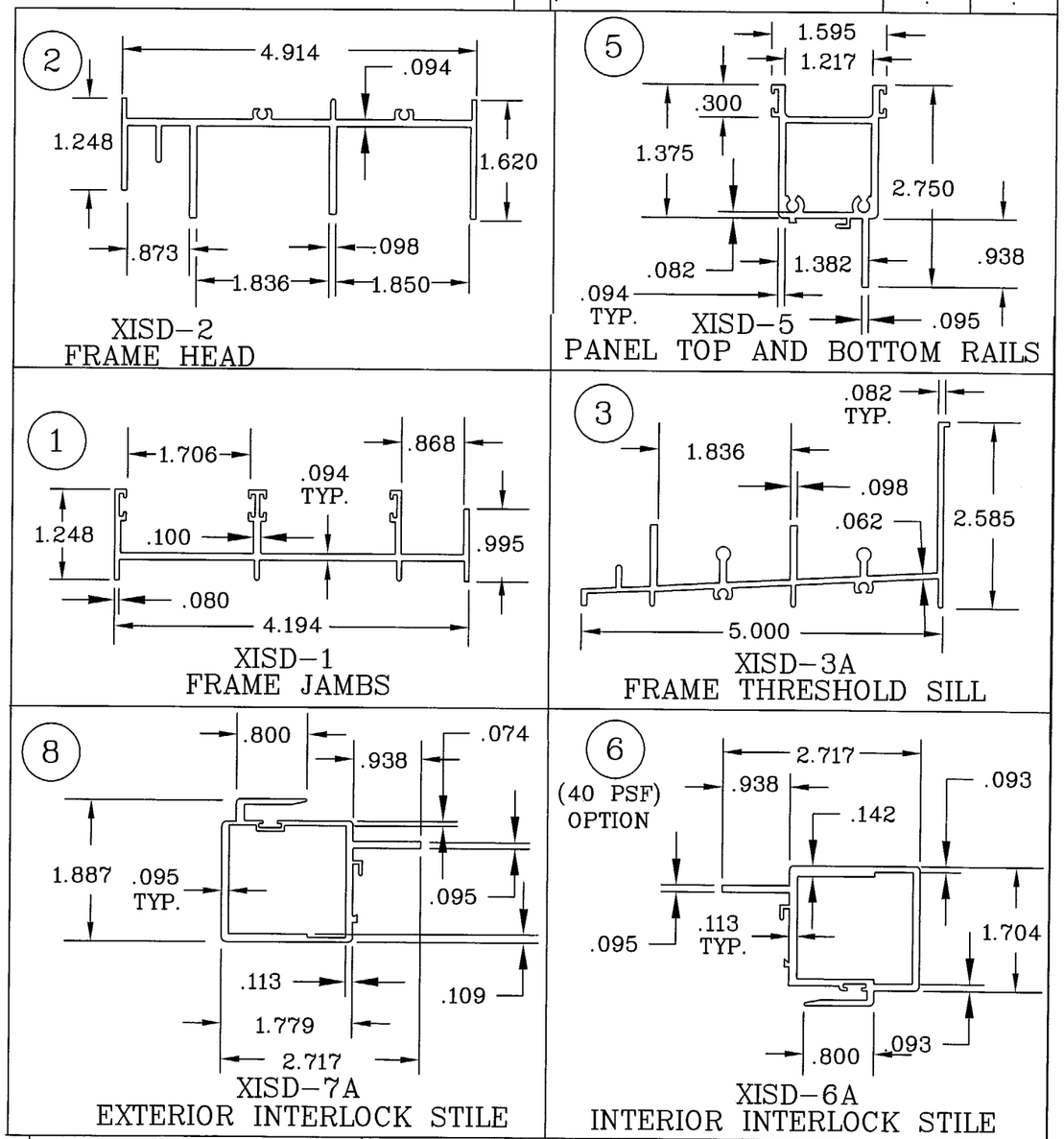


Approved as complying with the Florida Building Code
Date JUNE 24, 2004
NOA# 03-0415.02
Miami Dade Product Control Division
By Shaq I. Chanda

CHARLES A. RAGEN, P.E.
FL REG ENG #49121
5/17/04

SIMONTON® WINDOWS
Corporate Headquarters
1 Cochrane Avenue
Pennsboro, WV 26415

Manufacturing Plant
4504 30th Street, West
Bradenton, FL 34207

| | | | |
|---|---|---|---|
| SCALE: NTS | SHEET: 3 OF 5 | DRAWN BY: RLK | DATE: 1/9/03 |
| SIZE: B | DRAWING NO: DADE-125C | REV: C | CHECKED BY: LNJ | DATE: 1/9/03 |
| FILE: DADE-125C | | APPRV'D BY: CP | DATE: 1/9/03 |
| SERIES: 002/002 STORMBREAKER PLUS SLIDING GL DOOR | | | |
| TITLE: ALUMINUM IMPACT RESISTANT 10' SGD (XO(REVERSIBLE)) CROSS SECTIONS | | | |

| REV. #: | REVISIONS: | REVISED BY: | DATE: |
|---|---|---|---|
| A | REVISED PER DADE MARKUP | RAE | 3/24/03 |
| B | REV FMT TO SIMONTON | RAE | 4/03 |
| C | REVISED PER DADE MARKUP | RLK | 3/23/04 |
| . | . | . | . |
| . | . | . | . |

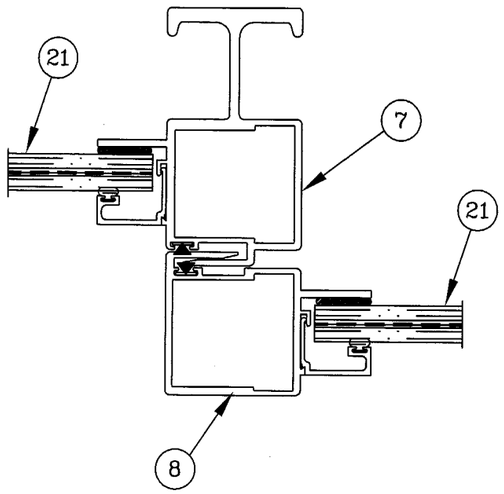


HORIZONTAL CROSS SECTION (XO)
SECTION B-B
(W/HD INTERIOR INTERLOCK)
REGUIRED FOR DP=±60 PSF SGD SYSTEM

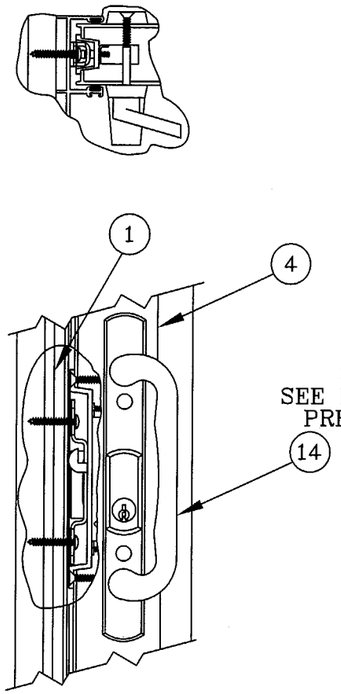


OPTION SEE DESIGN PRESSURE

LOCK/KEEPER HANDLE ASSEMBLY

| ITEM Nº | PART Nº | DESCRIPTION | QTY. | VENDOR |
|---|---|---|---|---|
| 1 | XISD-1 | 2-WIDE FRAME JAMB 6063-T5 | 2 | PROFILE EXTRUSIONS |
| 2 | XISD-2 | 2-WIDE FRAME HEAD 6063-T5 | 1 | PROFILE EXTRUSIONS |
| 3 | XISD-3A | 2-WIDE FRAME SILL 6063-T5 | 1 | PROFILE EXTRUSIONS |
| 4 | XISD-4 | PANEL LOCK/FIX JAMB STILE 6063-T5 | 2 | PROFILE EXTRUSIONS |
| 5 | XISD-5 | PANEL TOP & BOTTOM 6063-T5 | 3 | PROFILE EXTRUSIONS |
| 6 | XISD-6A | INTERIOR INTERLOCK 6063-T5 | 1 | PROFILE EXTRUSIONS |
| 7 | XISD-6-1A | (HD) INTERIOR INTERLOCK 6063-T5 | 1 | PROFILE EXTRUSIONS |
| 8 | XISD-7A | EXTERIOR INTERLOCK 6063-T5 | 1 | PROFILE EXTRUSIONS |
| 9 | XISD-8 | FIX. BOTT. RAIL ADAPT. 6063-T5 | 1 | PROFILE EXTRUSIONS |
| 10 | XISD-10 | 3/8" GLAZING BEAD 6063-T5 | 8 | PROFILE EXTRUSIONS |
| 11 | XISD-11 | FIXED PANEL CLIP | 4 | PROFILE EXTRUSIONS |
| 12 | PC-F3731 | SIDE ADJ. TANDEM ROLLERS | 2 | PE DELMAR |
| 13 | PC-F3765 | SIDE ADJ. TANDEM ROLLERS | 2 | PE DELMAR |
| 14 | S1368 | SGD LOCK/KEEPER HDL ASSY | 1 | SASH CONTROLS |
| 15 | IMP-005 | PILE WITH FIN .270 X .220 | AS REQD | AMESBURRY |
| 16 | XISD-5-1 | FIXED PNL BOTTOM RAIL 6063-T5 | 1 | PROFILE EXTRUSIONS |
| 17 | IMP-002 | PILE WITH FIN .270 X .230 | AS REQD | AMESBURRY |
| 18 | PURCHASE | # 8 X 3/4" P.H. PHIL. | 8 | |
| 19 | PURCHASE | # 10 X 3/4" P.H. PHIL. | 26 | |
| 20 | PURCHASE | 1/4"ø X 2-3/4" TAPCONS | AS REQD | I.T.W. (BUILDEX) |
| 21 | PURCHASE | 7/16" (NOM .475") OVERALL H.S. LAMINATED GLASS BY SOLUTIA | 2 | SAFLEX IMPACT |
| 22 | 5731 | SILICONE | AS REQD | SCHNEE-MOREHEAD |
| 23 | LAW-15C | BULB VINYL GASKET | AS REQD | AMESBURRY |

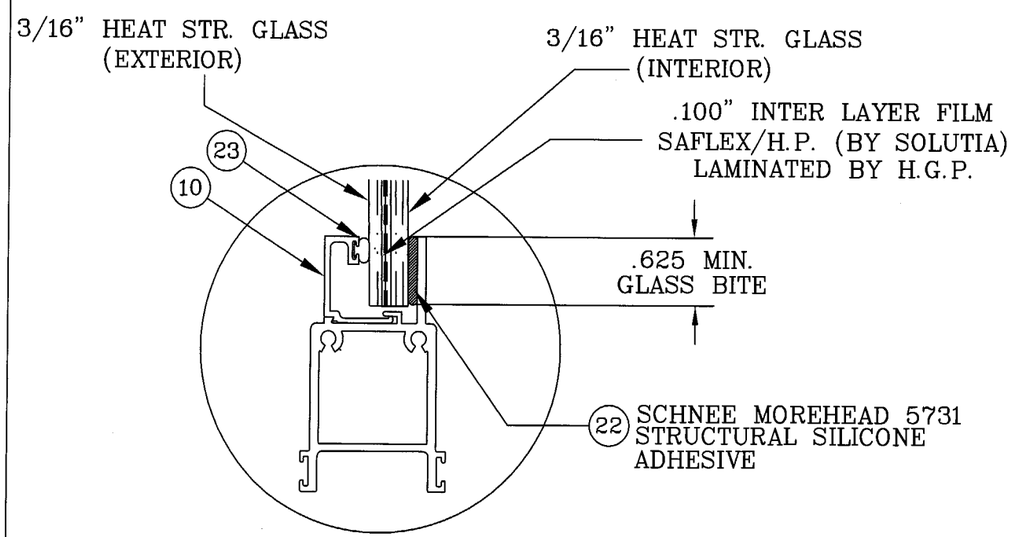


7/16"(NOM .475") OVERALL H.S. LAMINATED
GLAZING DETAIL
LARGE MISSILE

Approved as complying with the Florida Building Code
Date JUNE 24, 2004
NOA# 03-0415.02
Miami Dade Product Control Division
By Ishaq I. Chanda

CHARLES A. PAGEN, P.E.
FL REG ENG #49121
5/17/04

SIMONTON® WINDOWS
Corporate Headquarters
1 Cochrane Avenue
Pennsboro, WV 26415

Manufacturing Plant
4504 30th Street, West
Bradenton, FL 34207

| | | | |
|---|---|---|---|
| SCALE: NTS | SHEET: 4 OF 5 | DRAWN BY: RLK | DATE: 1/9/03 |
| SIZE: B | DRAWING NO: DADE-125C | REV: C | CHECKED BY: LNJ | DATE: 1/9/03 |
| FILE: DADE-125C | | APPRV'D BY: CP | DATE: 1/9/03 |
| SERIES: 002/002 STORMBREAKER PLUS SLIDING GL DOOR | | | |
| TITLE: ALUMINUM IMPACT RESISTANT 10' SGD (XO(REVERSIBLE)) BOM & CROSS SECTIONS | | | |

| REV. #: | REVISIONS: | REVISED BY: | DATE: |
|---|---|---|---|
| A | REVISED PER DADE MARKUP | RAE | 3/24/03 |
| B | REV FMT TO SIMONTON | RAE | 4/03 |
| C | REVISED PER DADE MARKUP | RLK | 3/23/04 |
| . | . | . | . |
| . | . | . | . |

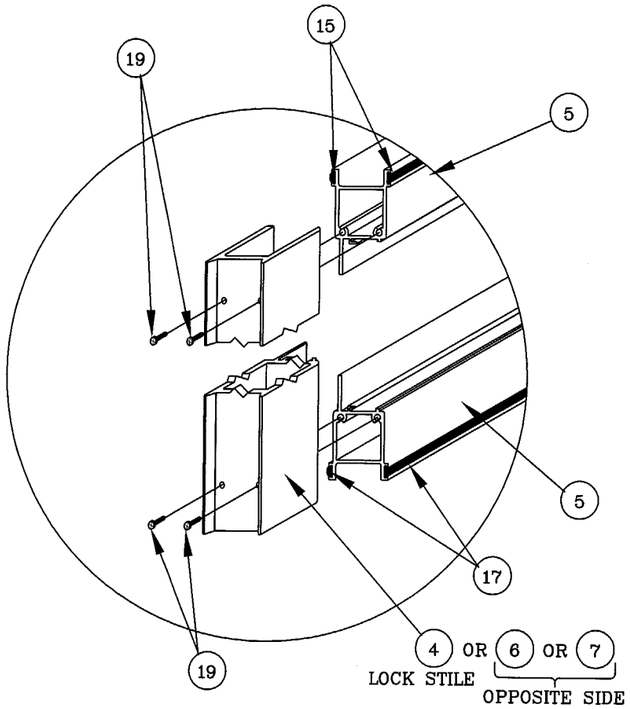


MOVING PANEL TOP
AND BOTTOM CORNER

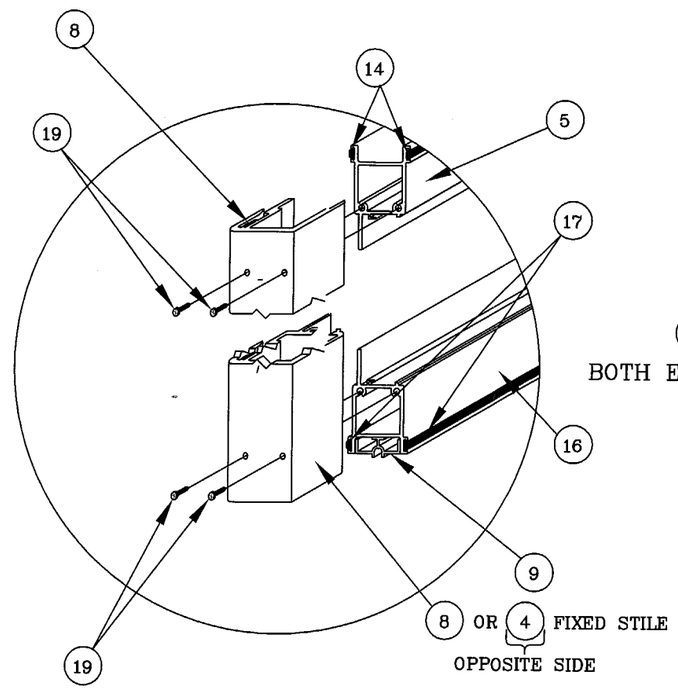


FIXED PANEL TOP
AND BOTTOM CORNER

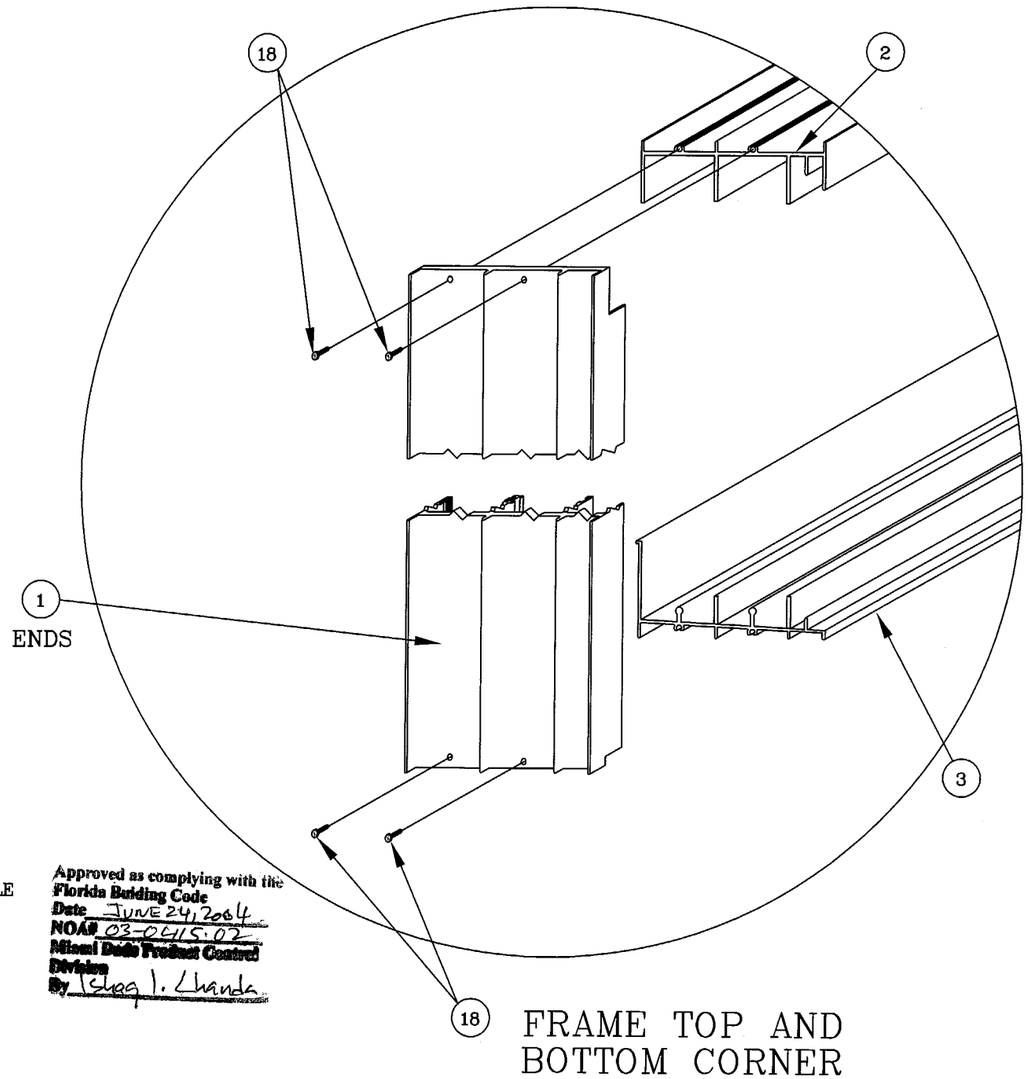


FRAME TOP AND
BOTTOM CORNER

Approved as complying with the Florida Building Code
Date JUNE 24, 2004
NOA# 03-0415.02
Miami Dade Product Control Division
By Shaq I. Chanda

CHARLES A. PAGEN, P.E.
FL REG ENG #49121
5/17/04

SIMONTON® WINDOWS
Corporate Headquarters
1 Cochrane Avenue
Pennsboro, WV 26415

Manufacturing Plant
4504 30th Street, West
Bradenton, FL 34207

| | | | |
|---|---|---|---|
| SCALE: NTS | SHEET: 5 OF 5 | DRAWN BY: RLK | DATE: 1/9/03 |
| SIZE: B | DRAWING NO: DADE-125C | REV: C | CHECKED BY: LNJ | DATE: 1/9/03 |
| FILE: DADE-125C | | APPRV'D BY: CP | DATE: 1/9/03 |
| SERIES: 002/002 STORMBREAKER PLUS SLIDING GL DOOR | | | |
| TITLE: ALUMINUM IMPACT RESISTANT 10' SGD (XO(REVERSIBLE)) CORNER ASSEMBLY DETAILS | | | |