MIAMI-DADE

BUILDING CODE COMPLIANCE OFFICE (BCCO)
PRODUCT CONTROL DIVISION

MIAMI-DADE COUNTY, FLORIDA
METRO-DADE FLAGLER BUILDING
140 WEST FLAGLER STREET, SUITE 1603
MIAMI, FLORIDA 33130-1563
(305) 375-2901 FAX (305) 375-2908

NOTICE OF ACCEPTANCE (NOA)

Simonton Windows
1 Cochrane Drive
Pennsboro, WV 26415

SCOPE:

This NOA is being issued under the applicable rules and regulations governing the use of construction materials. The documentation submitted has been reviewed by Miami-Dade County Product Control Division and accepted by the Board of Rules and Appeals (BORA) to be used in Miami Dade County and other areas where allowed by the Authority Having Jurisdiction (AHJ).

This NOA shall not be valid after the expiration date stated below. The Miami-Dade County Product Control Division (In Miami Dade County) and/or the AHJ (in areas other than Miami Dade County) reserve the right to have this product or material tested for quality assurance purposes. If this product or material fails to perform in the accepted manner, the manufacturer will incur the expense of such testing and the AHJ may immediately revoke, modify, or suspend the use of such product or material within their jurisdiction. BORA reserves the right to revoke this acceptance, if it is determined by Miami-Dade County Product Control Division that this product or material fails to meet the requirements of the applicable building code.

This product is approved as described herein, and has been designed to comply with the Florida Building Code, including the High Velocity Hurricane Zone.

DESCRIPTION: Series "O02/O02" Aluminum Single Hung Window - Impact

APPROVAL DOCUMENT: Drawing No. **0733-7**, titled "O02/O02 Storm Breaker Plus Single Hung and Eyebrow Window", sheets 1 through 5 of 5, dated 8/20/02, with revision No.7 dated 7/6/04, prepared by manufacturer, signed and sealed by Kelvyn A. Whitfield, P.E., bearing the Miami-Dade County Product Control Revision stamp with the Notice of Acceptance number and expiration date by the Miami-Dade County Product Control Division.

MISSILE IMPACT RATING: Large & Small Impact Resistant

LABELING: Each unit shall bear a permanent label with the manufacturer's name or logo, city, state and following statement: "Miami-Dade County Product Control Approved", unless otherwise noted herein.

RENEWAL of this NOA shall be considered after a renewal application has been filed and there has been no change in the applicable building code negatively affecting the performance of this product.

TERMINATION of this NOA will occur after the expiration date or if there has been a revision or change in the materials, use, and/or manufacture of the product or process. Misuse of this NOA as an endorsement of any product, for sales, advertising or any other purposes shall automatically terminate this NOA. Failure to comply with any section of this NOA shall be cause for termination and removal of NOA.

ADVERTISEMENT: The NOA number preceded by the words Miami-Dade County, Florida, and followed by the expiration date may be displayed in advertising literature. If any portion of the NOA is displayed, then it shall be done in its entirety.

INSPECTION: A copy of this entire NOA shall be provided to the user by the manufacturer or its distributors and shall be available for inspection at the job site at the request of the Building Official.

This NOA **revises and replaces NOA # 01-0904.06** and consists of this page 1 and evidence pages E-1, E-2 and E-3, as well as approval document mentioned above.

The submitted documentation was reviewed by **Manuel Perez, P.E.**

PRODUCT CONTROL ACCEPTED

Simonton Windows

NOTICE OF ACCEPTANCE: EVIDENCE SUBMITTED

A. DRAWINGS

1. Manufacturer's die drawings and sections.
2. Drawing No **0733-7**, Sheets 1 through 5 of 5, titled "O02/O02 Storm Breaker Plus Single Hung and Eyebrow Windows", dated 8/20/02, with revision No.7 dated 7/6/04, prepared by manufacturer, signed and sealed by Kelvyn A. Whitfield, P.E.

B. TESTS

1. Test reports on 1) Air Infiltration Test, per FBC, TAS 202-94
   2) Uniform Static Air Pressure Test, Loading per FBC TAS 202-94
   3) Water Resistance Test, per FBC, TAS 202-94
   4) Large Missile Impact Test per FBC, TAS 201-94
   5) Cyclic Wind Pressure Loading per FBC, TAS 203-94
   6) Forced Entry Test, per FBC, TAS 202-94 AAMA 1302.5-76

   along with marked-up drawings and installation diagram of one O/X specimens of a Series "O02/O02" Storm Breaker Plus Aluminum Single Hung Eyebrow Window, prepared by Certified Testing Laboratories, and Test Report No. **CTL-1076W**, dated February 11, 2004, signed and sealed by Ramesh Patel, P.E.
2. Test reports on 1) Air Infiltration Test, per SFBC, PA 202-94
   2) Uniform Static Air Pressure Test, Loading per SFBC PA 202-94
   3) Water Resistance Test, per SFBC, PA 202-94
   4) Large Missile Impact Test per SFBC, PA 201-94
   5) Cyclic Wind Pressure Loading per SFBC, PA 203-94
   6) Forced Entry Test, per SFBC 3603.2 (b) and PA 202-94

   along with marked-up drawings and installation diagram of three O/X specimens of a Series "Omega" Aluminum Single Hung Window, prepared by Fenestration Testing Laboratory, Inc., and Test Report No. **FTL-3153**, dated July 12, 2001, signed and sealed by Luis A. Figueredo, P.E. ***(Submitted under NOA# 01-0904.06***
3. Test reports on 1) Air Infiltration Test, per SFBC, PA 202-94
   2) Uniform Static Air Pressure Test, Loading per SFBC PA 202-94
   3) Water Resistance Test, per SFBC, PA 202-94
   4) Large Missile Impact Test per SFBC, PA 201-94
   5) Cyclic Wind Pressure Loading per SFBC, PA 203-94
   6) Forced Entry Test, per SFBC 3603.2 (b) and PA 202-94

   along with marked-up drawings and installation diagram of one O/X specimen of a Series "Omega" Aluminum Single Hung Window, prepared by Fenestration Testing Laboratory, Inc., and Test Report No. **FTL-3156**, dated July 12, 2001, signed and sealed by Luis A. Figueredo, P.E. ***(Submitted under NOA# 01-0904.06***

Manuel Perez, P.E.
Product Control Examiner
NOA No 03-0415.06
Expiration Date: January 2, 2008
Approval Date: August 5, 2004

4. Test reports on 1) Air Infiltration Test, per SFBC, PA 202-94
   2) Uniform Static Air Pressure Test, Loading per SFBC PA 202-94
   3) Water Resistance Test, per SFBC, PA 202-94
   4) Large Missile Impact Test per SFBC, PA 201-94
   5) Cyclic Wind Pressure Loading per SFBC, PA 203-94
   6) Forced Entry Test, per SFBC 3603.2 (b) and PA 202-94

   along with marked-up drawings and installation diagram of one O/X specimen of a Series "Omega" Aluminum Single Hung Window, prepared by Fenestration Testing Laboratory, Inc., and Test Report No. **FTL-3162**, dated July 12, 2001, signed and sealed by Luis A. Figueredo, P.E. ***(Submitted under NOA# 01-0904.06)***

C. CALCULATIONS

1. Anchor calculations and structural analysis, prepared by Applied Engineering Concept, Inc., dated 04/18/02, signed and sealed by Kelvyn A. Whitfield, P.E. Complies with ASTM E1300-98.

D. QUALITY ASSURANCE

1. Miami Dade Building Code Compliance Office (BCCO).

E. MATERIAL CERTIFICATIONS

1. Notice of Acceptance No. **00-0329.03** issued to Security Impact Glass Holdings L.L.C. for their "SAF-GLAS" dated 05/26/00, expiring on 12/16/02.
2. Notice of Acceptance No. **01-0205.02** issued to Solutia, Inc. for their "Saflex-Keepsafe Maximum" dated 05/17/01, expiring on 02/21/06.

F. STATEMENTS

1. Statement letter of conformance, dated June 4, 2004, signed and sealed by Kelvyn A. Whitfield, P.E.
2. Statement letter of no financial interest, dated June 4, 2004, signed and sealed by Kelvyn A. Whitfield, P.E.
3. Letter from Simonton Windows requesting that NOA **#01-0904.06** currently under Norandex Building Products be issued under the name of Simonton Windows, not dated, signed by Chuck Anderson.
4. Letter from Norandex Building Products requesting that existing NOA **#01-0904.06** be rescinded and that they will no longer manufacture such product, thus giving up all rights to Simonton Windows.
5. Document of "Asset Sale and Purchase Agreement" dated December 17, 2002.
6. Statement letter of sale of assets of Norandex/Reynolds to Simonton Building Products, Inc. dated March 25, 2003, signed by Mr. D.J. Schreiner, Vice President – Operations.

Manuel Perez, P.E.
Product Control Examiner
NOA No 03-0415.06
Expiration Date: January 2, 2008
Approval Date: August 5, 2004

Simonton Windows

NOTICE OF ACCEPTANCE: EVIDENCE SUBMITTED

G. OTHER

1. Notice of Acceptance No. **01-0904.06**, issued to Norandex BuildingProducts for their Series "Omega" Aluminum Single Hung Window, approved on 01/02/03 and expiring on 01/02/08.

Manuel Perez, P.E.
Product Control Examiner
NOA No 03-0415.06
Expiration Date: January 2, 2008
Approval Date: August 5, 2004

REV. #:	REVISIONS:	REVISED BY:	DATE:
1	MODIFICATIONS AS PER D.C.	JRM	10/01
2	REVISIONS BY JIM MOORE	JRM	4/02
3	.REV PER DADE MARKUPS RAE	RAE	10/02
4	. REV FMT TO SIMONTON RAE	RAE	4/03
5	REV PER DADE LETTER DATED 10/23/03	RLK	3/30/04
6	ADDED EYEBROW UNIT, & CTLA-1076W	ESL	6/2/04
7	REV PER DADE LETTER DATED 7/6/04	ESL	7/6/04

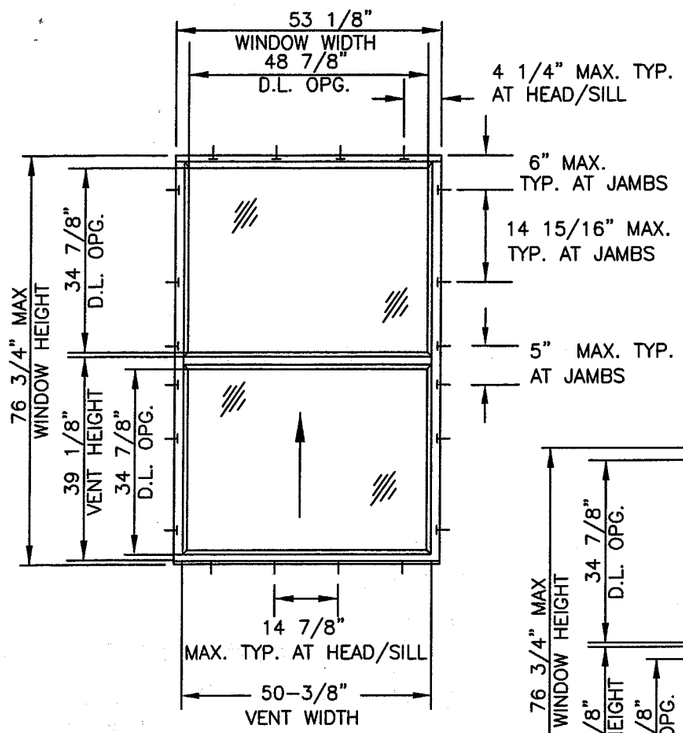

DESIGN PRESSURE RATING WITH 5/16" LAMINATED 1/8" ANN.090 INNER LAYER (SAFLEX KEEPSAFE MAX) BY SOLUTIA, INC. 1/8" ANN. GLASS	
POSITIVE	50.0 PSF
NEGATIVE	50.0 PSF

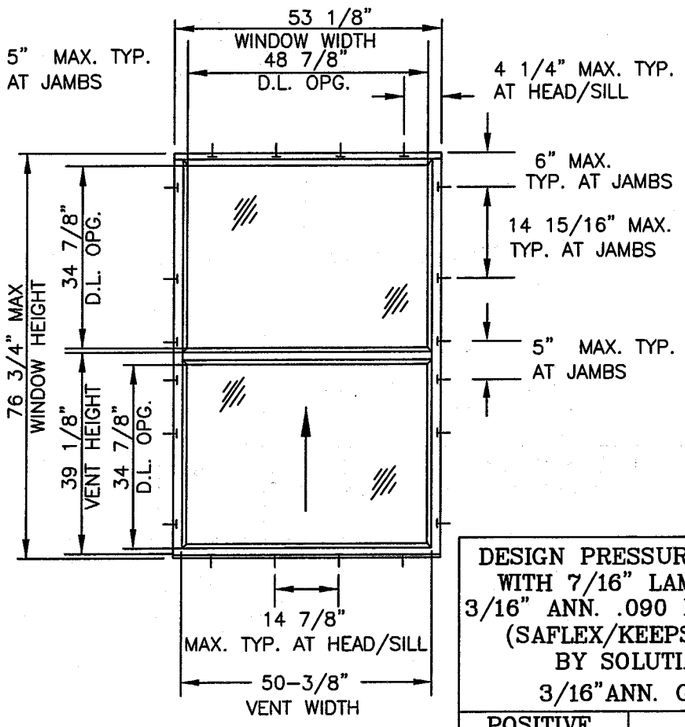

DESIGN PRESSURE RATING WITH 7/16" LAMINATED 3/16" ANN. .090 INNER LAYER (SAFLEX/KEEPSAFE MAX) BY SOLUTIA, INC. 3/16"ANN. GLASS	
POSITIVE	70.0 PSF
NEGATIVE	70.0 PSF

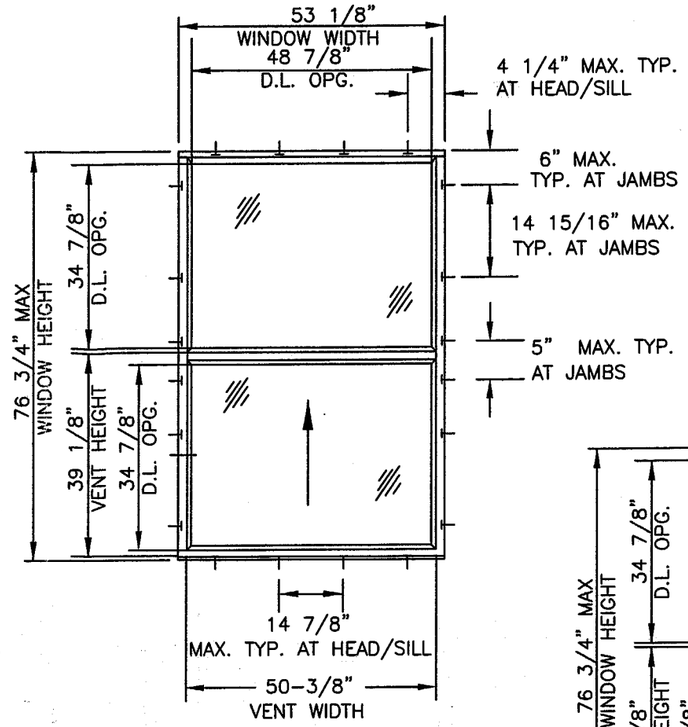

DESIGN PRESSURE RATING WITH 5/16" LAMINATED 1/8" H.S. (SAF GLASS) BY SECURITY IMPACT GLASS HOLDINGS, LLC. INNER LAYER 1/8" H.S.	
POSITIVE	70.0 PSF
NEGATIVE	70.0 PSF

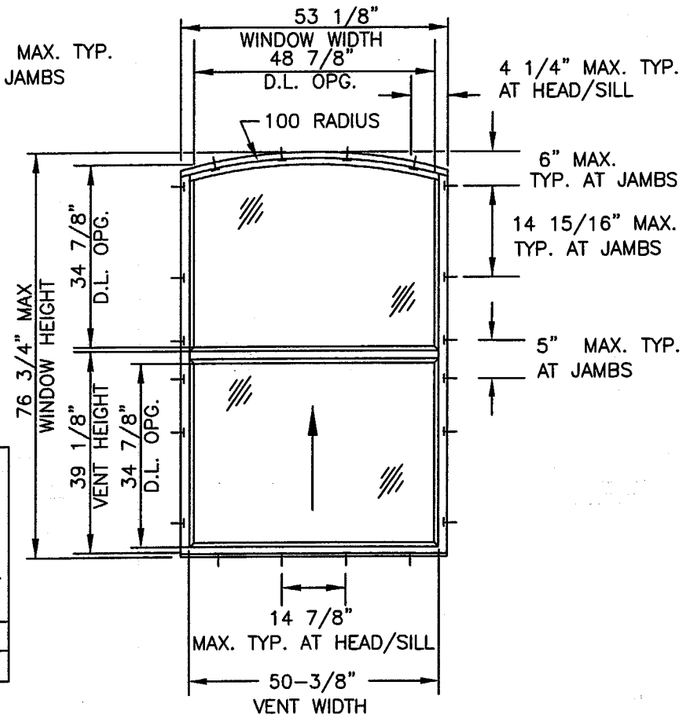

SINGLE HUNG EYEBROW

DESIGN PRESSURE RATING WITH 7/16" LAMINATED 3/16" ANN. .090 INNER LAYER (SAFLEX/KEEPSAFE MAX) BY SOLUTIA, INC. 3/16"ANN. GLASS	
POSITIVE	50.0 PSF
NEGATIVE	50.0 PSF

NOTE:

1. *THIS SINGLE HUNG GLASS WINDOW SYSTEM IS DESIGNED AND TESTED TO COMPLY WITH THE REQUIREMENTS OF THE FLORIDA BUILDING CODE 2001 CHAPTERS 16, 17, AND 24 FOR THE HIGH VELOCITY HURRICANE ZONE.*
2. *ALL EXTRUSIONS ARE ALUMINUM, 6063-T5 ALLOY, WITH A MINIMUM Fy OF 16,000 P.S.I. U.N.O.*
3. *BASED ON LABORATORY TEST REPORT NUMBERS FTL-3153, FTL-3156 AND FTL-3162 FENESTRATION TESTING LAB, INC. & CERTIFIED TESTING LABORATORIES TEST REPORT NUMBER CTLA-1076W*
4. *WOOD BUCKS (BY OTHERS) MUST BE DESIGNED TO CARRY WINDOW WIND LOAD IMPOSED ON THEM AND MUST BE INSPECTED BY THE BUILDING OFFICIAL.*
5. *CONCRETE COMPRESSIVE STRENGTH = 3000 PSI @ 28 DAYS.*

PRODUCT REVISED
as complying with the Florida
Building Code
Acceptance No. 03-0415.06
Expiration Date JAN. 2, 2008
By Manuel Perez
Miami Dade Product Control
Division

IMPACT RESISTANT

KELVYN WHITFIELD P.E
FLORIDA NO. 24140
1002 NE 116 STREET
MIAMI, FL 33161-6744

7/10/04
KELVYN A. WHITFIELD
FL REG ENG #24140

SIMONTON® WINDOWS
Corporate Headquarters
1 Cochrane Avenue
Pennsboro, WV 26415

Manufacturing Plant
4504 30th Street, West
Bradenton, FL 34207

SCALE: NTS	SHEET: 1 of 5		DRAWN BY: JRM	DATE: 8/20/02
SIZE: B	DRAWING NO: 0733-7	REV: 7	CHECKED BY: LNJ	DATE: 8/20/02
FILE: 0733-7			APPRV'D BY: CP	DATE: 8/20/02

SERIES: 002/002 STORM BREAKER PLUS SINGLE HUNG AND EYEBROW WINDOWS

TITLE: ALUMINUM IMPACT RESISTANT ELEVATION DETAILS

REV. #:	REVISIONS:	REVISED BY:	DATE:
1	MODIFICATIONS AS PER D.C.	JRM	10/01
2	REVISIONS BY JIM MOORE	JRM	4/02
3	. REV PER DADE MARKUPS RAE	RAE	10/02
4	. REV FMT TO SIMONTON RAE	RAE	4/03
5	REV PER DADE LETTER DATED 10/23/03	RLK	3/30/04
6	ADDED EYEBROW UNIT & CTLA-1076W	ESL	6/2/04
7	REV PER DADE LETTER DATED 7/6/04	ESL	7/6/04

(1)

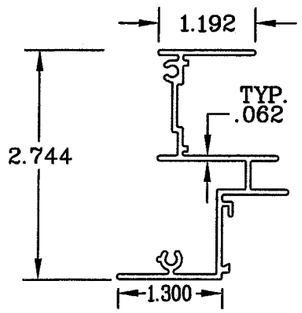

FRAME JAMB FLANGE
(6063-T5) PART# XIMP-1

(6)

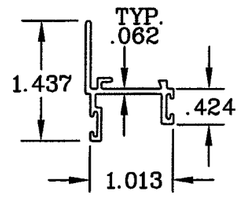

SASH STILE
(6063-T5) PART# XIMP-6

(13)

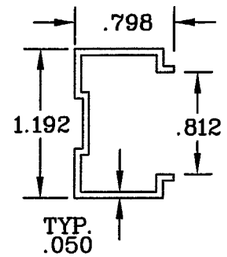

SASH STOP
(6063-T5) PART# XIMP-12

(12)

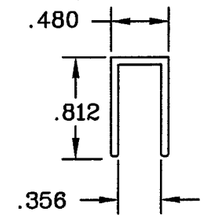

ALUM. EXTRUDED GLAZING BEAD
(6063-T5) PART# XIMP-18

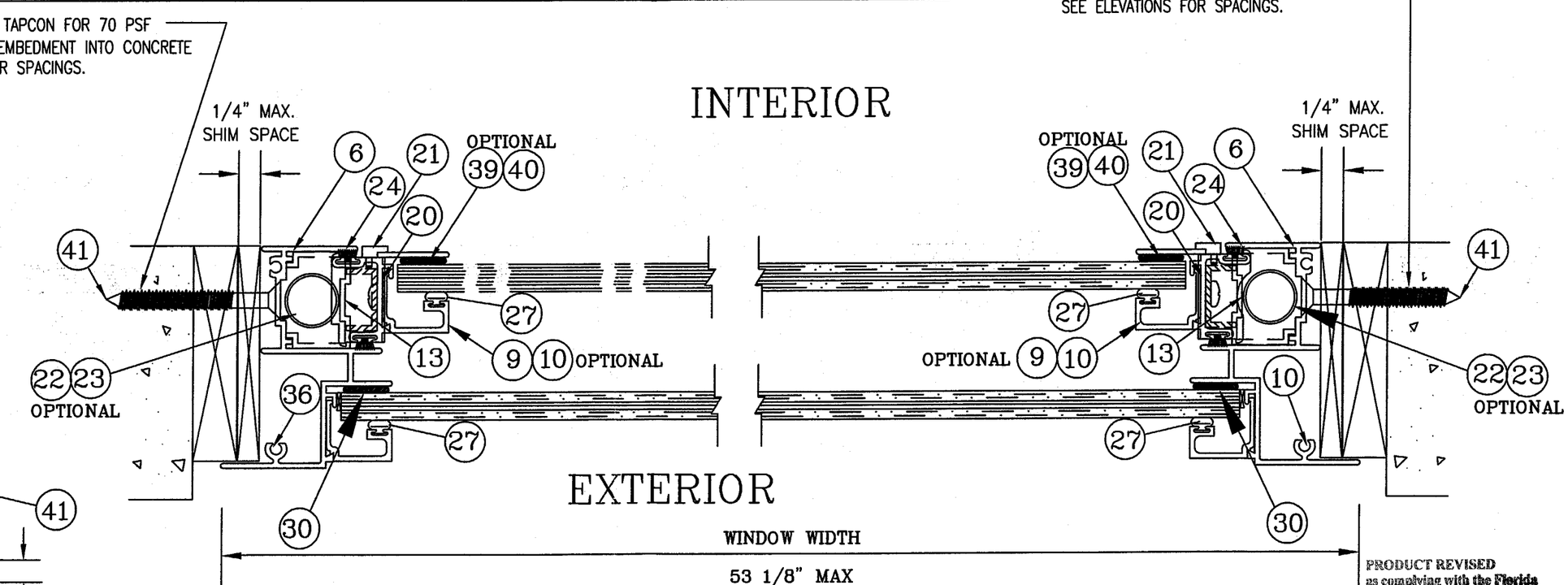

HORIZONTAL LAYOUT

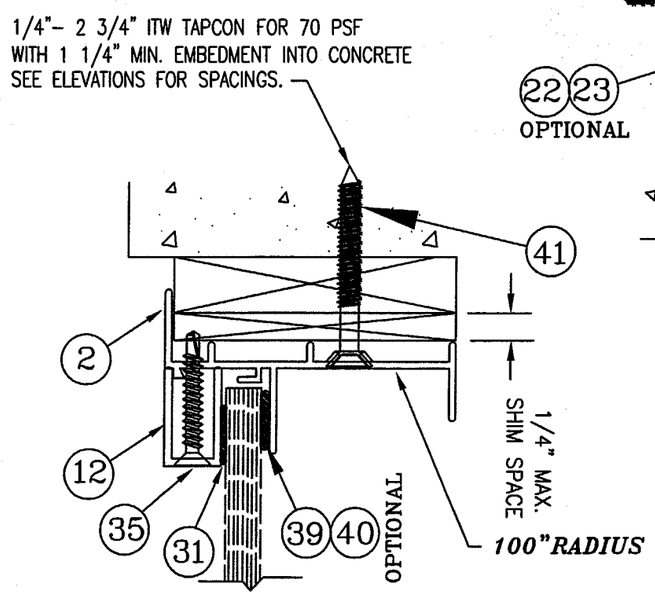

EYEBROW HEAD SECTION

PRODUCT REVISED
as complying with the Florida
Building Code
Acceptance No. 03-0415.06
Expiration Date JAN. 2, 2008
By Manuel Perez
Miami Dade Product Control
Division

KELVYN WHITFIELD P.E
FLORIDA NO. 24140
1002 NE 116 STREET
MIAMI, FL 33161-6744

7/10/04
KELVYN A. WHITFIELD
FL REG ENG #24140

SIMONTON® WINDOWS
Corporate Headquarters
1 Cochrane Avenue
Pennsboro, WV 26415

Manufacturing Plant
4504 30th Street, West
Bradenton, FL 34207

SCALE: NTS	SHEET: 2 of 5		DRAWN BY: JRM	DATE: 8/20/02
SIZE: B	DRAWING NO: 0733-7	REV: 7	CHECKED BY: LNJ	DATE: 8/20/02
FILE: 0733-7			APPRV'D BY: CP	DATE: 8/20/02

SERIES: 002/002 STORM BREAKER PLUS SINGLE HUNG AND EYEBROW WINDOWS

TITLE: ALUMINUM IMPACT RESISTANT HORIZONTAL CROSS SECTION

REV. #:	REVISIONS:	REVISED BY:	DATE:
1	MODIFICATIONS AS PER D.C.	JRM	10/01
2	REVISIONS BY JIM MOORE	JRM	4/02
3	. REV PER DADE MARKUPS RAE	RAE	10/02
4	. REV FMT TO SIMONTON RAE	RAE	4/03
5	REV PER DADE LETTER DATED 10/23/03	RLK	3/30/04
6	ADDED EYEBROW UNIT & CTLA-1076W	ESL	6/2/04
7	REV PER DADE LETTER DATED 7/6/04	ESL	7/6/04

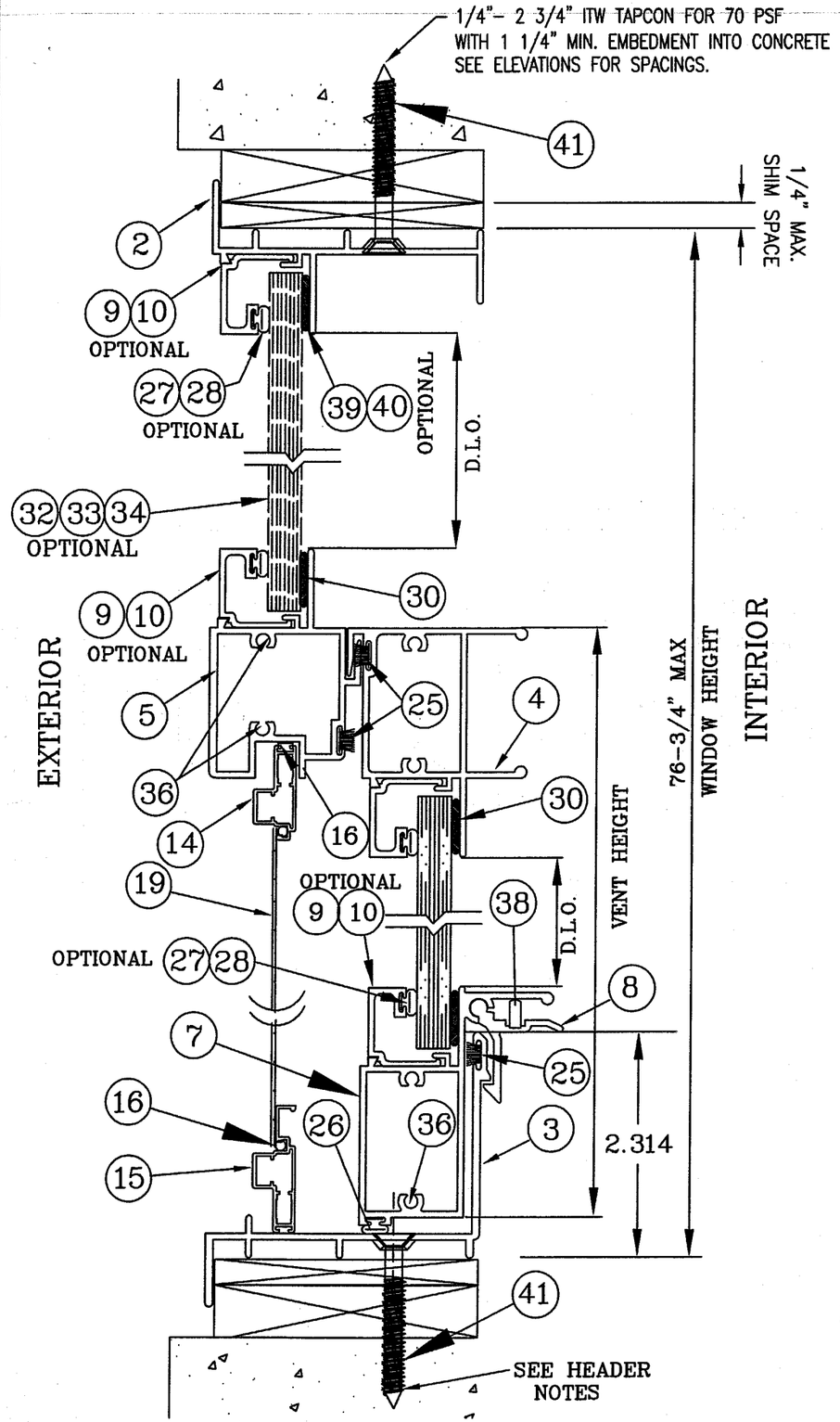

VERTICAL CROSS SECTION

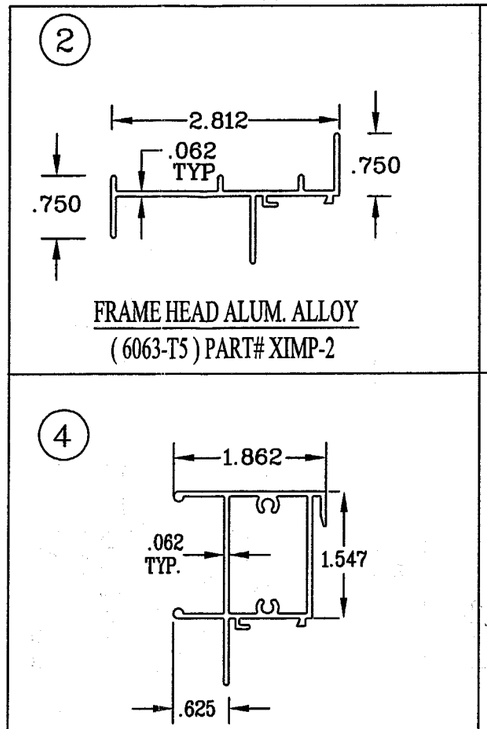

PRODUCT REVISED
as complying with the Florida
Building Code
Acceptance No 03-0415.06
Expiration Date JAN. 2, 2008
By Manuel Perez
Miami Dade Product Control
Division

KELVYN WHITFIELD P.E
FLORIDA NO. 24140
1002 NE 116 STREET
MIAMI, FL 33161-6744

7/10/04
KELVYN A. WHITFIELD
FL REG ENG #24140

SIMONTON® WINDOWS
Corporate Headquarters
1 Cochrane Avenue
Pennsboro, WV 26415

Manufacturing Plant
4504 30th Street, West
Bradenton, FL 34207

SCALE: NTS	SHEET: 3 of 5	DRAWN BY: JRM	DATE: 8/20/02
SIZE: B	DRAWING NO: 0733-7	REV: 7	CHECKED BY: LNJ	DATE: 8/20/02
FILE: 0733-7		APPRV'D BY: CP	DATE: 8/20/02

SERIES: 002/002 STORM BREAKER PLUS SINGLE HUNG AND EYEBROW WINDOWS

TITLE: ALUMINUM IMPACT RESISTANT VERTICAL CROSS SECTION

REV. #:	REVISIONS:	REVISED BY:	DATE:
1	MODIFICATIONS AS PER D.C.	JRM	10/01
2	REVISIONS BY JIM MOORE	JRM	4/02
3	. REV PER DADE MARKUPS RAE	RAE	10/02
4	. REV FMT TO SIMONTON RAE	RAE	4/03
5	REV PER DADE LETTER DATED 10/23/03	RLK	3/30/04
6	ADDED EYEBROW UNIT & CTLA-1076W	ESL	6/2/04
7	REV PER DADE LETTER DATED 7/6/04	ESL	7/6/04

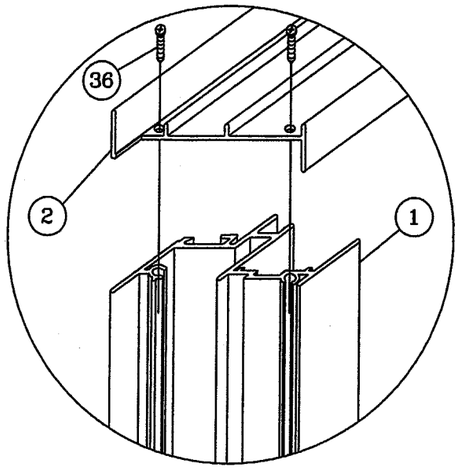

TOP FRAME CORNER

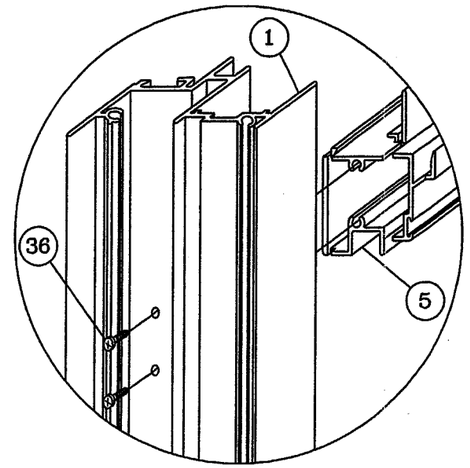

INTERMEDIATE FRAME CORNER

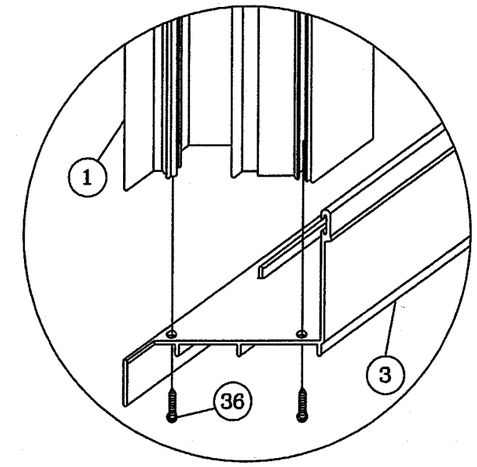

BOTTOM FRAME CORNER

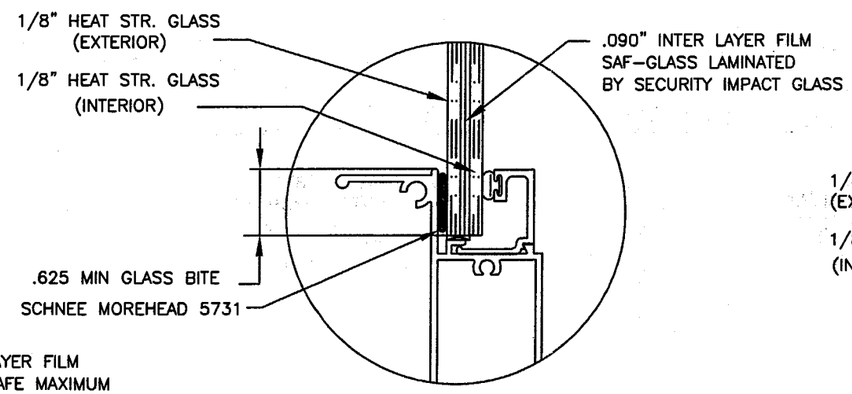

5/16" OVERALL LAMINATED
GLAZING DETAIL
LARGE MISSILE

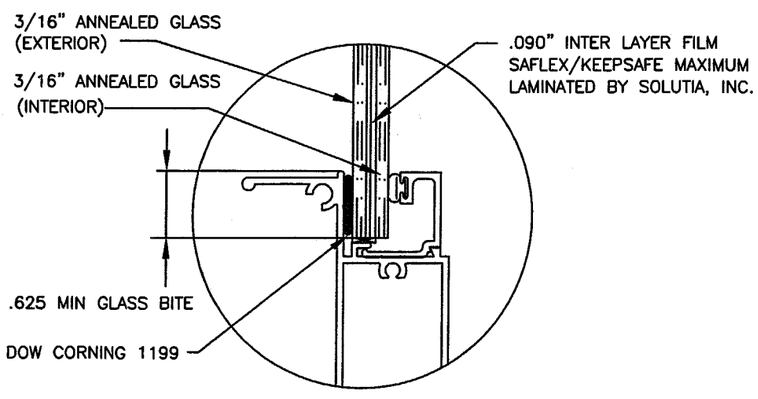

7/16" OVERALL LAMINATED
GLAZING DETAIL
LARGE MISSILE

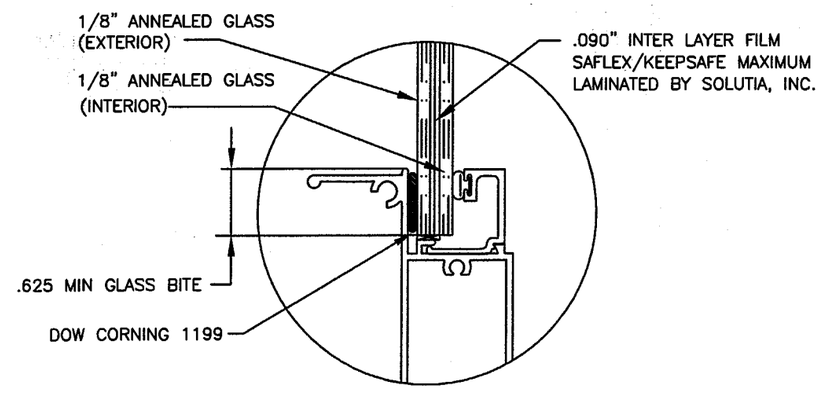

5/16" OVERALL LAMINATED
GLAZING DETAIL
LARGE MISSILE

PRODUCT REVISED
as complying with the Florida
Building Code
Acceptance No 03-0415.06
Expiration Date JAN. 2, 2008
By Manuel Perez
Miami Dade Product Control
Division

KELVYN WHITFIELD P.E
FLORIDA NO. 24140
1002 NE 116 STREET
MIAMI, FL 33161-6744

7/16/04
KELVYN A. WHITFIELD
FL REG ENG #24140

SIMONTON® WINDOWS
Corporate Headquarters
1 Cochrane Avenue
Pennsboro, WV 26415

Manufacturing Plant
4504 30th Street, West
Bradenton, FL 34207

SCALE: NTS	SHEET: 4 of 5	DRAWN BY: JRM	DATE: 8/20/02
SIZE: B	DRAWING NO: 0733-7 / REV: 7	CHECKED BY: LNJ	DATE: 8/20/02
FILE: 0733-7		APPRV'D BY: CP	DATE: 8/20/02
SERIES: 002/002 STORM BREAKER PLUS SINGLE HUNG AND EYEBROW WINDOWS			
TITLE: ALUMINUM IMPACT RESISTANT CORNER SECTION DETAILS			

REV. #:	REVISIONS:	REVISED BY:	DATE:
1	MODIFICATIONS AS PER D.C.	JRM	10/01
2	REVISIONS BY JIM MOORE	JRM	4/02
3	. REV PER DADE MARKUPS RAE	RAE	10/02
4	. REV FMT TO SIMONTON RAE	RAE	4/03
5	REV PER DADE LETTER DATED 10/23/03	RLK	3/30/04
6	ADDED EYEBROW UNIT & CTLA-1076W	ESL	6/2/04
7	REV PER DADE LETTER DATED 7/6/04	ESL	7/6/04

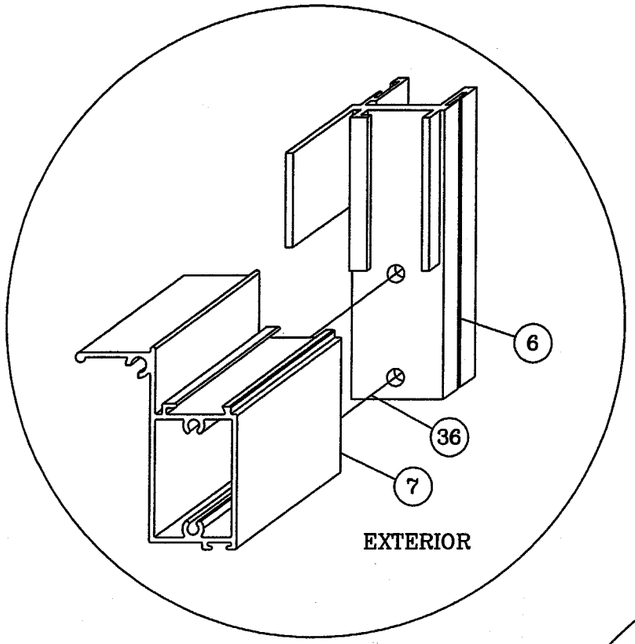

BOTTOM VENT CORNER

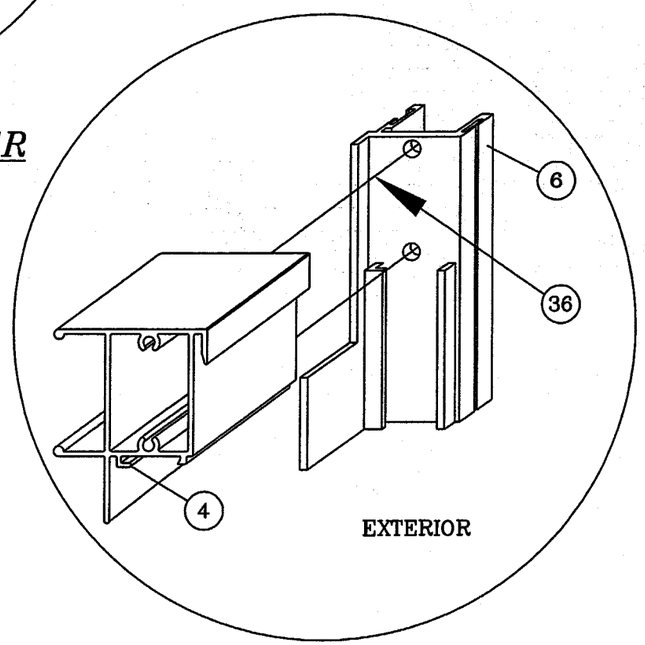

TOP VENT CORNER

	ITEM Nº	PART Nº	DESCRIPTION		QTY.	VENDOR
	1	XIMP-1	FRAME JAMB FLANGE	6063-T5	2	PROFILE EXTRUSIONS
	2	XIMP-2	FRAME HEAD FLANGE	6063-T5	1	PROFILE EXTRUSIONS
	3	XIMP-3	FRAME SILL FLANGE	6063-T5	1	PROFILE EXTRUSIONS
	4	XIMP-4	SASH TOP RAIL	6063-T5	1	PROFILE EXTRUSIONS
	5	XIMP-5	FIXED CHECK RAIL	6063-T5	1	PROFILE EXTRUSIONS
	6	XIMP-6	SASH STILE	6063-T5	2	PROFILE EXTRUSIONS
	7	XIMP-7	SASH BOTTOM RAIL	6063-T5	1	PROFILE EXTRUSIONS
	8	XIMP-8	SASH SNAP LATCH	6063-T5	2	PROFILE EXTRUSIONS
	9	XIMP-9	GLAZING BEAD 5/8"	6063-T5	AS REQD.	PROFILE EXTRUSIONS
	10	XIMP-10	GLAZING BEAD 3/8"	6063-T5	AS REQD.	PROFILE EXTRUSIONS
	11	XIMP-11	GLAZING BEAD 1/4"	6063-T5	AS REQD.	PROFILE EXTRUSIONS
EYEBROW ONLY	12	XIMP-18	EYEBROW GLASS STOP	6063-T5	AS REQD.	PROFILE EXTRUSIONS
	13	XIMP-12	SASH STOP		2	PROFILE EXTRUSIONS
	14	XAVW-11A	SCREEN FRAME STOCK		3	FLORIDA SCREEN
	15	XAVW-12A	SCREEN LIFT RAIL		1	FLORIDA SCREEN
	16	DH-127A	SCREEN SPLINE		AS REQD.	FLORIDA SCREEN
	17	PURCHASE	SCREEN CORNER KEY		8	M&M PLASTICS
	18	FLA-21A	SCREEN SPRING CLIP		2	CFC WIRE FORMS
	19	PURCHASE	SCREEN 18X16 MESH		AS REQD.	PHIFER WIRE
	20	HMP-229	TOP SASH GUIDE		2	M&M PLASTICS
	21	HMP-228	SASH FACE GUIDE		2	M&M PLASTICS
	22	PURCHASE	SUPER LIFT SPIRAL BALANCE		2	UNIQUE BALANCES
	23	PURCHASE	ULTRA-LIFT SPIRAL BALANCE		2	CALDWELL BALANCES
	24	IMP-002	.230 FIN-SEAL WOOLPILE		AS REQD.	AMESBURY
	25	IMP-001	.310 FIN-SEAL WOOLPILE		AS REQD.	AMESBURY
	26	DJD-52A	BOTTOM RAIL WEATHER-STRIP		AS REQD.	VYTRON
	27	32304	VINYL BULB 5/8" GLAZING BEAD		AS REQD.	AMESBURY
	28	32082	VINYL BULB 3/8" GLAZING BEAD		AS REQD.	AMESBURY
	29	32304	VINYL BULB 1/4" GLAZING BEAD		AS REQD.	AMESBURY
	30	SJ5302A	.090" BUMPON VINYL SPACER		AS REQD.	3M PROTECTIVE PROD.
EYEBROW ONLY	31	PURCHASE	1/8"X 1/2" GLAZING TAPE		AS REQD.	TAPE SPECIALIST
	32	PURCHASE	GLASS 5/16" LAM. W/.070 POLY.		2	SECURITY IMPACT GLASS
	33	PURCHASE	GLASS 5/16" LAM. W/.090 POLY.		2	SOLUTIA/HGP.
	34	PURCHASE	GLASS 7/16" LAM. W/.090 PVB		2	SOLUTIA/HGP.
EYEBROW ONLY	35	PURCHASE	#8 x 1-1/8" FLAT HEAD TEK		5	SPENCER PRODUCTS
	36	F-8-40	#8-20 x 1" PAN HEAD		20	SPENCER PRODUCTS
	37	F-8-27	#8 x 1" PAN HEAD TEK		2	SPENCER PRODUCTS
	38	PURCHASE	LATCH SPRING		2	GREGG TOOL & DIE
	39	5731	SILICONE (OPTIONAL)		AS REQD.	SCHNEE MOREHEAD
	40	1199	SILICONE (OPTIONAL)		AS REQD.	DOW CORNING
	41	PURCHASE	1/4" X 2-3/4" TAP-CON		AS REQD.	I.T.W.

PRODUCT REVISED
as complying with the Florida
Building Code
Acceptance No. 03-0415.06
Expiration Date JAN. 2, 2008
By Manuel Perez
Miami-Dade Product Control
Division

KELVYN WHITFIELD P.E
FLORIDA NO. 24140
1002 NE 116 STREET
MIAMI, FL 33161-6744

7/14/04
KELVYN A. WHITFIELD
FL REG ENG #24140

SIMONTON® WINDOWS
Corporate Headquarters
1 Cochrane Avenue
Pennsboro, WV 26415

Manufacturing Plant
4504 30th Street, West
Bradenton, FL 34207

SCALE: NTS	SHEET: 5 of 5		DRAWN BY: JRM	DATE: 8/20/02
SIZE: B	DRAWING NO: 0733-7	REV: 7	CHECKED BY: LNJ	DATE: 8/20/02
FILE: 0733-7			APPRV'D BY: CP	DATE: 8/20/02

SERIES: 002/002 STORM BREAKER PLUS SINGLE HUNG AND EYEBROW WINDOWS

TITLE: ALUMINUM IMPACT RESISTANT BOM & SECTION DETAILS