MIAMI-DADE

BUILDING CODE COMPLIANCE OFFICE (BCCO)
PRODUCT CONTROL DIVISION

MIAMI-DADE COUNTY, FLORIDA
METRO-DADE FLAGLER BUILDING
140 WEST FLAGLER STREET, SUITE 1603
MIAMI, FLORIDA 33130-1563
(305) 375-2901 FAX (305) 375-2908

NOTICE OF ACCEPTANCE (NOA)

Simonton Windows
One Cochrane Drive
Pennsboro, WV 26415

SCOPE:

This NOA is being issued under the applicable rules and regulations governing the use of construction materials. The documentation submitted has been reviewed by Miami-Dade County Product Control Division and accepted by the Board of Rules and Appeals (BORA) to be used in Miami Dade County and other areas where allowed by the Authority Having Jurisdiction (AHJ).

This NOA shall not be valid after the expiration date stated below. The Miami-Dade County Product Control Division (In Miami Dade County) and/or the AHJ (in areas other than Miami Dade County) reserve the right to have this product or material tested for quality assurance purposes. If this product or material fails to perform in the accepted manner, the manufacturer will incur the expense of such testing and the AHJ may immediately revoke, modify, or suspend the use of such product or material within their jurisdiction. BORA reserves the right to revoke this acceptance, if it is determined by Miami-Dade County Product Control Division that this product or material fails to meet the requirements of the applicable building code.

This product is approved as described herein, and has been designed to comply with the Florida Building Code, including the High Velocity Hurricane Zone.

DESCRIPTION: Series "O02/O02 2-Panel Glider" Aluminum Horizontal Sliding Window

APPROVAL DOCUMENT: Drawing No. **02-0411-3**, titled "Series: O02/O02 Stormbreaker Plus Slider Window" Sheets 1 through 4 of 4, dated 6/19/02, with revision #3 dated 06/03/04, prepared by manufacturer, signed and sealed by Kelvyn Whitfield, P.E., bearing the Miami-Dade County Product Control Revision stamp with the Notice of Acceptance number and expiration date by the Miami-Dade County Product Control Division.

MISSILE IMPACT RATING: Large and Small Missile Impact

LABELING: Each unit shall bear a permanent label with the manufacturer's name or logo, city, state and following statement: "Miami-Dade County Product Control Approved", unless otherwise noted herein.

RENEWAL of this NOA shall be considered after a renewal application has been filed and there has been no change in the applicable building code negatively affecting the performance of this product.

TERMINATION of this NOA will occur after the expiration date or if there has been a revision or change in the materials, use, and/or manufacture of the product or process. Misuse of this NOA as an endorsement of any product, for sales, advertising or any other purposes shall automatically terminate this NOA. Failure to comply with any section of this NOA shall be cause for termination and removal of NOA.

ADVERTISEMENT: The NOA number preceded by the words Miami-Dade County, Florida, and followed by the expiration date may be displayed in advertising literature. If any portion of the NOA is displayed, then it shall be done in its entirety.

INSPECTION: A copy of this entire NOA shall be provided to the user by the manufacturer or its distributors and shall be available for inspection at the job site at the request of the Building Official.

This NOA **revises and replaces NOA # 02-0708.02** and consists of this page 1 and evidence page E-1, as well as approval document mentioned above.

The submitted documentation was reviewed by **Manuel Perez, P.E.**

PRODUCT CONTROL ACCEPTED

Simonton Windows

NOTICE OF ACCEPTANCE: EVIDENCE SUBMITTED

A. DRAWINGS

1. Manufacturer's die drawings and sections.
2. Drawing No. **02-0411-3**, titled "Series "O02/O02 Stormbreaker Plus Slider Window," dated 6/19/02, with revision #3 dated 06/03/04, Sheets 1 through 4 of 4, prepared by manufacturer, signed and sealed by Kelvyn Whitfield, P.E.

B. TESTS

1. Test reports on 1) Air Infiltration Test, per PA 202-94
   2) Uniform Static Air Pressure Test, Loading per PA 202-94
   3) Water Resistance Test, per PA 202-94
   4) Forced Entry Test, per SFBC 3603.2 (b) and PA 202-94

   along with marked-up drawings and installation diagram of aluminum awning windows, issued by Fenestration Testing Laboratory, Inc., Laboratory Test Report Number: **FTL-3261** dated January 7, 2002, reviewed and signed and sealed by Luis Figueredo, P.E. **(transferred from file #01-0712.05)**

C. CALCULATIONS

1. Comparative Analysis and Anchor & glazing calculations, prepared by Applied Engineering Concept, Inc., dated 06/28/02, signed and sealed by Kelvyn A. Whitfield, P.E.

D. QUALITY ASSURANCE

1. Miami Dade Building Code Compliance Office (BCCO).

E. MATERIAL CERTIFICATIONS

1. Notice of Acceptance No. **00-1212.04** issued to E.I. DuPont DeNemours for "**Dupont Butacite ® PVB**" dated 02/15/01, expiring on 12/11/05.

F. STATEMENTS (transferred from file#01-0712.05)

1. Statement letter of conformance and no financial interest dated June 26, 2002 signed and sealed by Kelvyn A. Whitfield, P.E.
2. Laboratory compliance letter for Laboratory Number: **3261** issued by Fenestration Testing laboratory, dated January 25, 2002, signed & sealed by Luis Figueredo, P.E.

G. OTHER

1. Notice of Acceptance No. **02-0708.02**, issued to Norandex Building Products for their Series "Omega Impact Glider 2-Panel" Aluminum Horizontal Sliding Window, approved on 09/05/02 and expiring on 09/05/07.

Manuel Perez, P.E.
Product Control Examiner
NOA No 03-0415.09
Expiration Date: September 05, 2007
Approval Date: July 8, 2004

REV. #:	REVISIONS:	REVISED BY:	DATE:
1	REV FMT TO SIMONTON RAE	RAE	4/03
2	REV PER DADE LETTER DATED 10/29/03	RLK	3/29/03
3	REV PER MARKUP	ESL	6/03/04

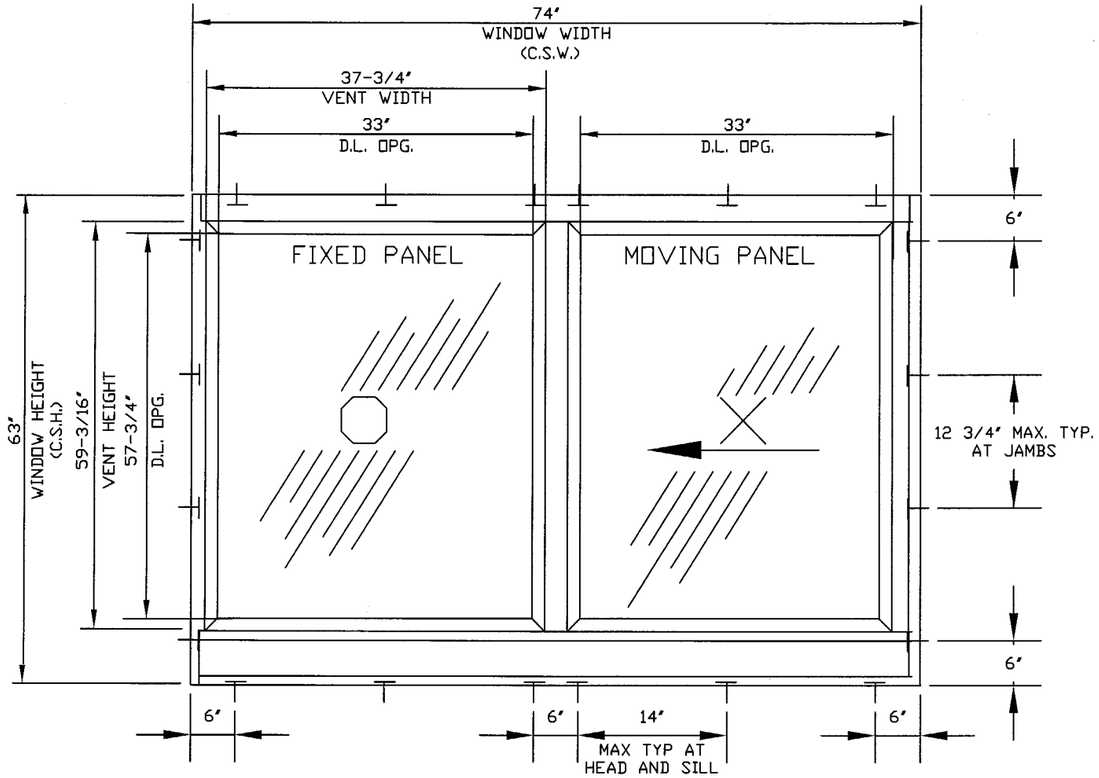

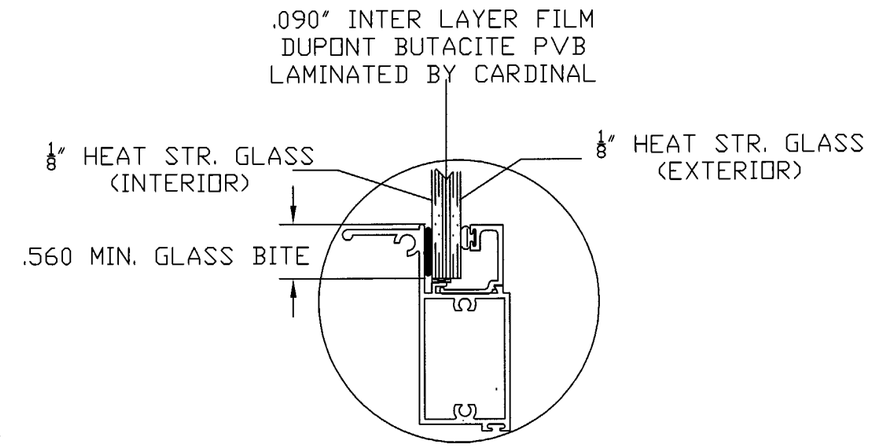

0.340" LAMINATED
GLAZING DETAIL
LARGE MISSILE

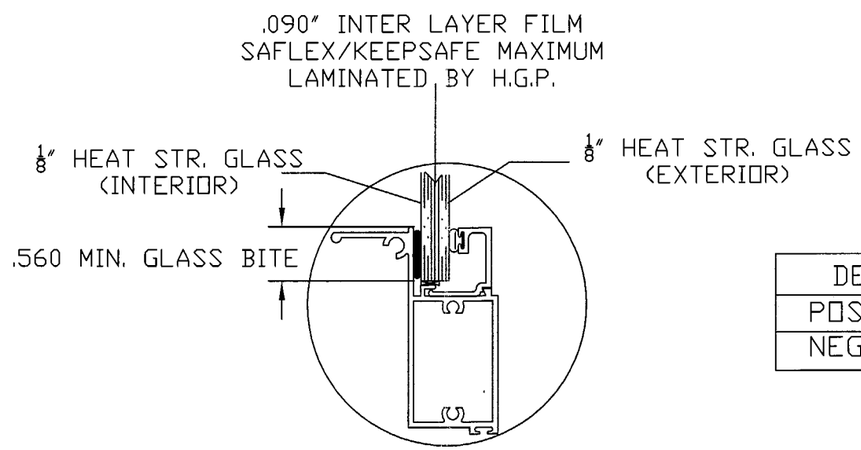

0.340" LAMINATED
GLAZING DETAIL
LARGE MISSILE

DESIGN PRESSURE RATING	
POSITIVE	+ 70 PSF
NEGATIVE	- 70 PSF

NOTES

1. THIS HORIZONTAL SLIDING GLASS WINDOW SYSTEM IS DESIGNED AND TEST TO COMPLY WITH REQUIREMENTS OF THE FLORIDA BUILDING CODE 2001 CHAPTERS 16, 17, AND 24 FOR THE HIGH VELOCITY HURRICANE ZONE.
2. ALL EXTRUSIONS ARE ALUMINUM 6063-T5 ALLOY, WITH MINIMUM Fy OF 16,000 P.S.I. U.N.O..
3. BASED ON LABORATORY TEST REPORT No. 3261. FENESTRATION TESTING LAB, INC.
4. WOOD BUCKS (BY OTHERS) MUST BE DESIGNED TO CARRY WINDOW WIND LOAD IMPOSED ON THEM AND MUST BE REVIEWED BY BUILDING OFFICIAL.
5. CONCRETE COMPRESSIVE STRENGTH = 3,000 PSI @ 28 DAYS.

PRODUCT REVISED
as complying with the Florida
Buiding Code
Acceptance No. 03-0415.09
Expiration Date SEPT. 5, 2007
By Miami Dade Product Control
Division

KELVYN WHITFIELD P.E
FLORIDA NO. 24140
1002 NE 116 STREET
MIAMI, FL 33161-6744

06/04/04.
KELVYN WHITFIELD
FL REG ENG #24140

SIMONTON®
WINDOWS
Corporate Headquarters
1 Cochrane Avenue
Pennsboro, WV 26415

Manufacturing Plant
4504 30th Street, West
Bradenton, FL 34207

SCALE: NTS	SHEET: 1 of 4	DRAWN BY: JRM	DATE: 6/19/02
SIZE: B	DRAWING NO: 02-0411-3	REV: 3	CHECKED BY: LNJ	DATE: 6/19/02
FILE: 02-0411-3		APPRV'D BY: CP	DATE: 6/19/02
SERIES: 002/002 STORMBREAKER PLUS SLIDER WINDOW			
TITLE: ALUMINUM IMPACT RESISTANT ELEVATION DETAILS			

REV. #:	REVISIONS:	REVISED BY:	DATE:
1	REV FMT TO SIMONTON RAE	RAE	4/03
2	REV PER DADE LETTER DATED 10/29/03	RLK	3/29/03
3	REV PER MARKUP	ESL	6/03/04

(2B)

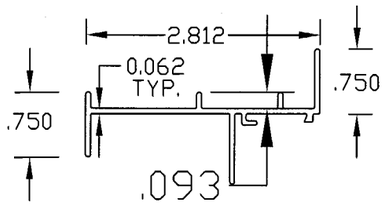

FRAME FIXED JAMB
(6063-T5)
HALF SCALE

(2)

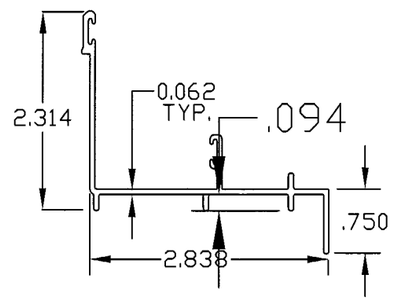

FRAME MOVING JAMB
(6063-T5)
HALF SCALE

(6)

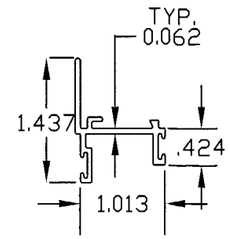

VENT TOP & BOTT. RAIL
(6063-T5)
HALF SCALE

(8)

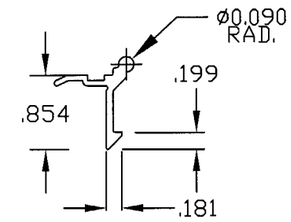

ALUM. SPRING HOOK LOCK
(6063-T5)
HALF SCALE

(9)

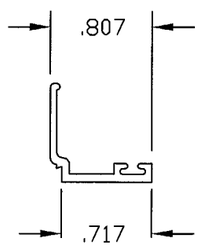

ALUM. EXTRUDED GLAZING BEAD
(6063-T5)
HALF SCALE

(10)

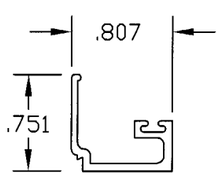

ALUM. EXTRUDED GLAZING BEAD
(6063-T5)
HALF SCALE

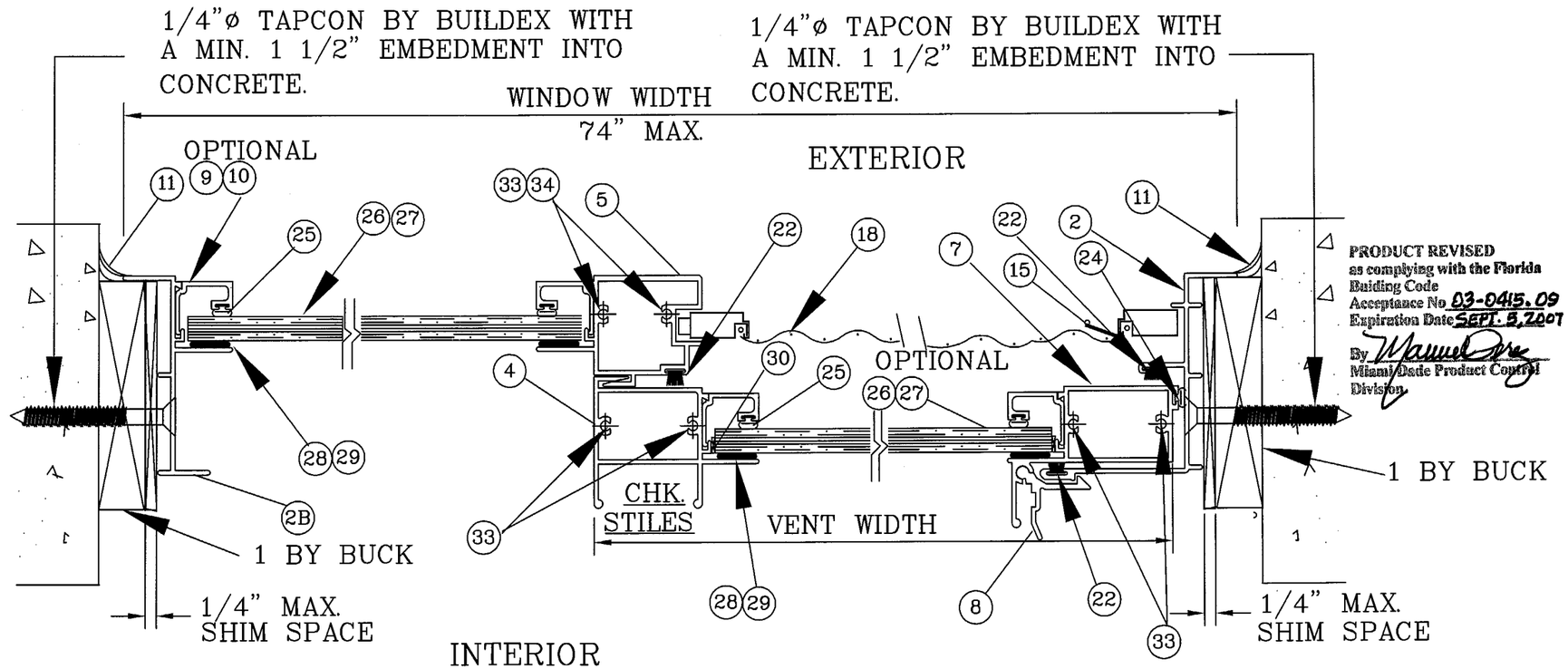

HORIZONTAL CROSS SECTION

PRODUCT REVISED
as complying with the Florida Building Code
Acceptance No 03-0415.09
Expiration Date SEPT. 5, 2007
By Miami-Dade Product Control Division

KELVYN WHITFIELD P.E
FLORIDA NO. 24140
1002 NE 116 STREET
MIAMI, FL 33161-6744

06/04/04
KELVYN WHITFIELD
FL REG ENG #24140

SIMONTON® WINDOWS
Corporate Headquarters
1 Cochrane Avenue
Pennsboro, WV 26415

Manufacturing Plant
4504 30th Street, West
Bradenton, FL 34207

SCALE: NTS	SHEET: 2 of 4	DRAWN BY: JRM	DATE: 6/19/02
SIZE: DWGSZ	DRAWING NO: DWGNO	REV: REV	CHECKED BY: LNJ	DATE: 6/19/02
FILE: FILE		APPRV'D BY: CP	DATE: 6/19/02
SERIES: 002/002 STORMBREAKER PLUS SLIDER WINDOW			
TITLE: ALUMINUM IMPACT RESISTANT HORIZONTAL CROSS SECTION			

REV. #:	REVISIONS:	REVISED BY:	DATE:
1	REV FMT TO SIMONTON RAE	RAE	4/03
2	REV PER DADE LETTER DATED 10/29/03	RLK	3/29/03
3	REV PER MARKUP	ESL	6/03/04

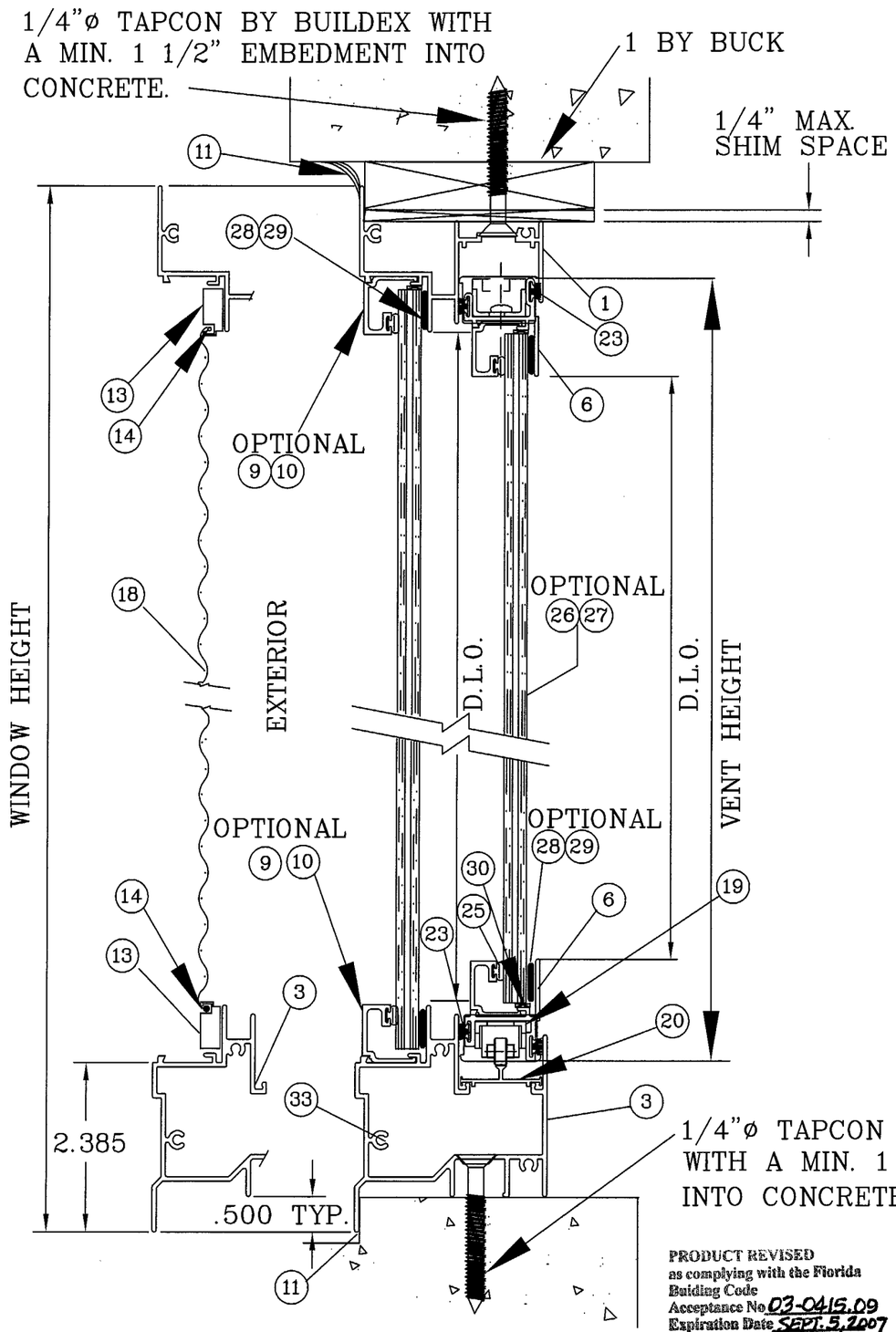

VERTICAL CROSS SECTION

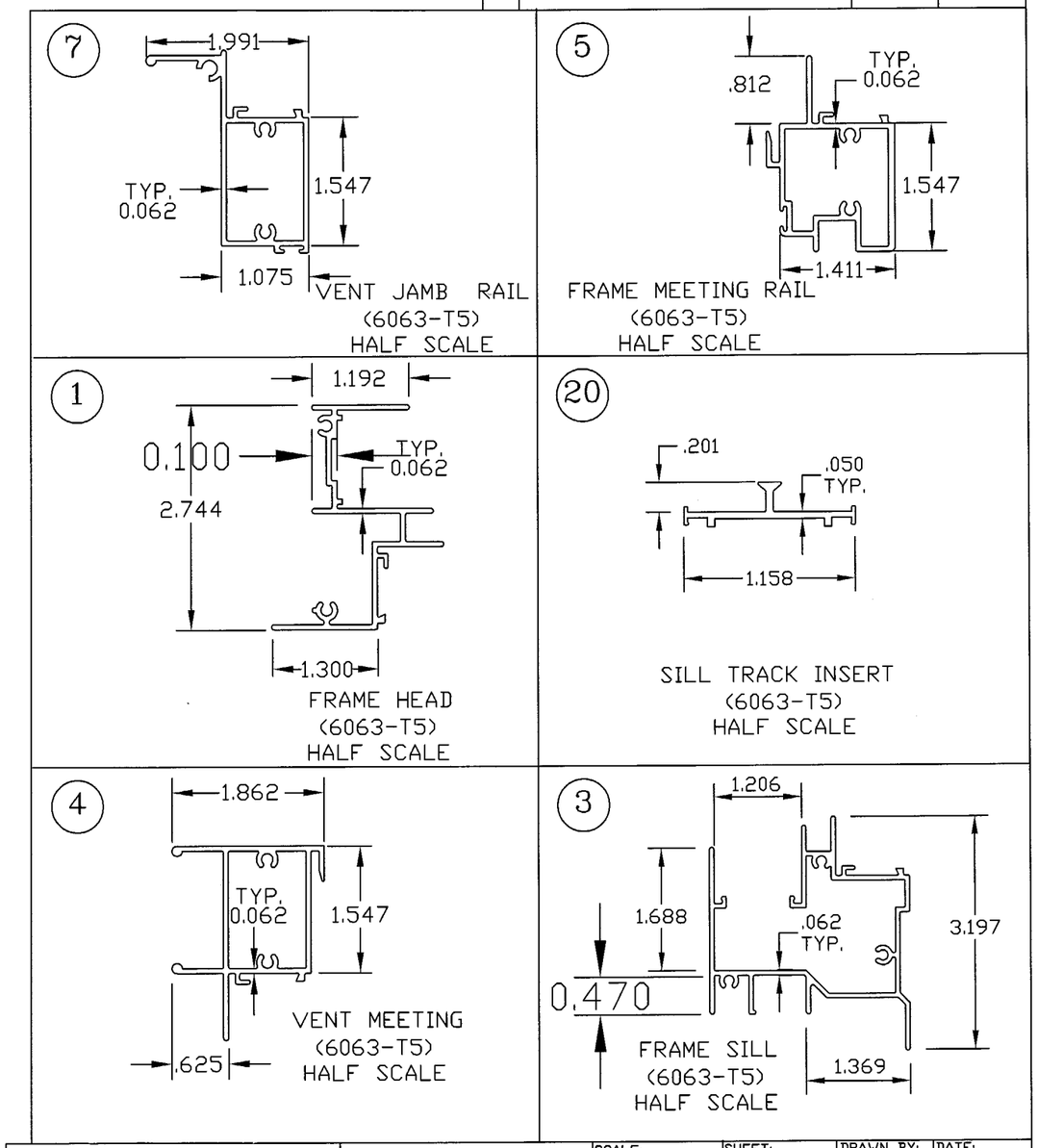

PRODUCT REVISED
as complying with the Florida
Building Code
Acceptance No. 03-0415.09
Expiration Date SEPT. 5, 2007
By Manuel Perez
Miami/Dade Product Control
Division

KELVYN WHITFIELD P.E
FLORIDA NO. 24140
1002 NE 116 STREET
MIAMI, FL 33161-6744

06/04/04
KELVYN WHITFIELD
FL REG ENG #24140

SIMONTON® WINDOWS
Corporate Headquarters
1 Cochrane Avenue
Pennsboro, WV 26415

Manufacturing Plant
4504 30th Street, West
Bradenton, FL 34207

SCALE: NTS	SHEET: 3 of 4	DRAWN BY: JRM	DATE: 06/19/02
SIZE: B	DRAWING NO: 02-0411-3	REV: 3	CHECKED BY: LNJ	DATE: 06/19/02
FILE: 02-0411-3		APPRV'D BY: CP	DATE: 06/19/02
SERIES: 002/002 STORMBREAKER PLUS SLIDER WINDOW			
TITLE: ALUMINUM IMPACT RESISTANT VERT. CROSS SECTION & DETAILS			

Nº	PART Nº	DESCRIPTION	QTY.	VENDOR
1	XIMP-1	FRAME HEAD	1	PROFILE EXTRUSIONS
2	XIMP-1-1	FRAME MOVING SIDE JAMB	1	PROFILE EXTRUSIONS
2B	XIMP-2	FRAME FIXED JAMB	1	PROFILE EXTRUSIONS
3	XIMP-3-1	FRAME SILL	1	PROFILE EXTRUSIONS
4	XIMP-4	VENT CHECKRAIL	1	PROFILE EXTRUSIONS
5	XIMP-5	FIXED CHECKRAIL	1	PROFILE EXTRUSIONS
6	XIMP-6	VENT RAIL (TOP & BOTT.)	2	PROFILE EXTRUSIONS
7	XIMP-7	VENT JAMB RAIL	1	PROFILE EXTRUSIONS
8	XIMP-8	VENT SNAP LATCH	2	PROFILE EXTRUSIONS
9	XIMP-9	GLAZING BEAD 5/8"	AS REQD.	PROFILE EXTRUSIONS
10	XIMP-10	GLAZING BEAD 3/8"	AS REQD.	PROFILE EXTRUSIONS
11	5504	CORNER SEALANT	AS REQD.	SCHEE MOREHEAD
12	XIMP-12	VENT STOP	2	PROFILE EXTRUSIONS
13	19-011	SCREEN FRAME STOCK	4	FLORIDA SCREEN
14	.140 DIA.	SCREEN SPLINE	AS REQD.	FLORIDA SCREEN
15	HMP-223-2	SCREEN CORNER KEY	4	M&M PLASTICS
16	FLA-21A	SCREEN SPRING CLIP	2	CFC WIRE FORMS
17	FW-48-3	SCREEN PULL TAB	2	MOLDSAVER

Nº	PART Nº	DESCRIPTION	QTY.	VENDOR
18	PURCHASE	SCREEN 18X16 MESH	AS REQD.	PHIFER WIRE
19	HMP-230	ROLLER HOUSING GUIDE	2	M&M PLASTICS
20	XIMP-13A	SILL TRACK INSERT	1	PROFILE EXTRUSIONS
21	HML-28G	WEEP HOLE COVER	2	SECURITY PLASTICS
22	IMP-001	.310 FIN-SEAL WOOLPILE	AS REQD.	AMESBURY
23	IMP-002	.230 FIN-SEAL WOOLPILE	AS REQD.	AMESBURY
24	DJD-52-A	VENT RAIL BULB VINYL	AS REQD.	VITRON
25	IMP-004	.187x.375 T-SLOT BULB VINYL	AS REQD.	AMESBURY
26	PURCHASE	5/16" LAMINATED GLASS	2	SOLUTIA/HGP.
27	PURCHASE	5/16" LAMINATED GLASS	2	SECURITY IMPACT GLASS
28	5731	SILICONE SEALANT	AS REQD.	SCHNEE MOREHEAD
29	1199	SILICONE SEALANT	AS REQD.	DOW-CORNING
30	PURCHASE	.125" RUBBER SETTING BLOCK	AS REQD.	H.O. PRODUCTS
31	SJ5302A	.090" BUMPON VINYL SPACER	AS REQD.	3M PROTECTIVE PROD.
32	IMP-003	LATCH SPRING	2	GREGG TOOL & DIE
33	F-8-34	#8-20 x 1" PAN HEAD	18	SPENCER PRODUCTS
34	PROPOSED	#8B x 2-1/2" PAN HEAD	2	SPENCER PRODUCTS

REV. #:	REVISIONS:	REVISED BY:	DATE:
1	REV FMT TO SIMONTON RAE	RAE	4/03
2	REV PER DADE LETTER DATED 10/29/03	RLK	3/29/03
3	REV PER MARKUP	ESL	06/03/04

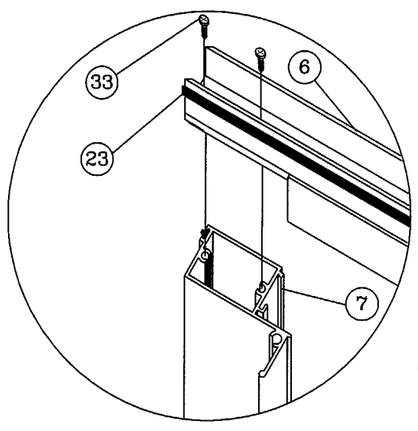

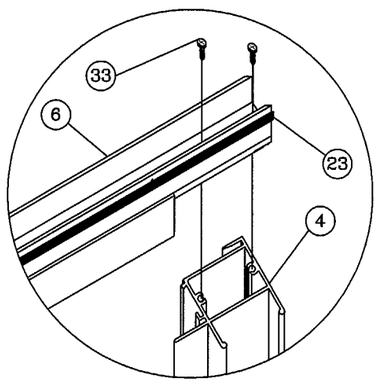

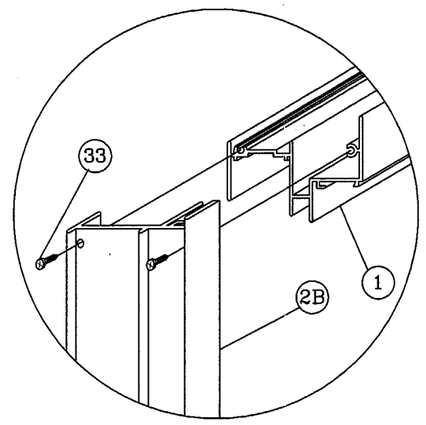

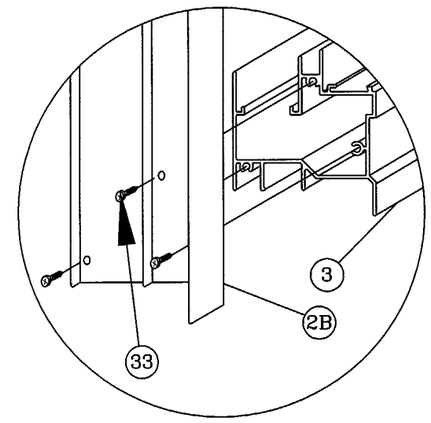

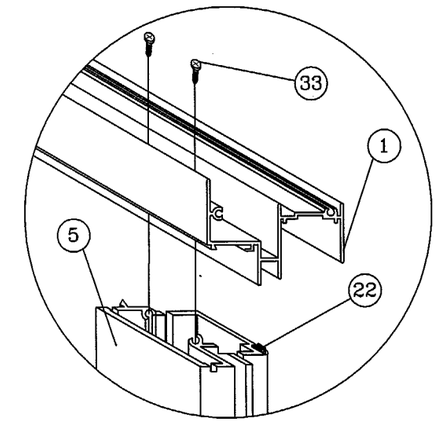

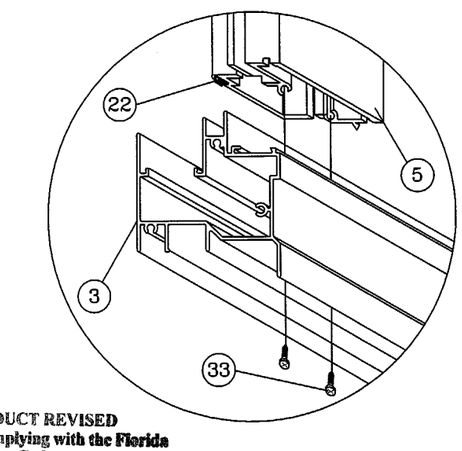

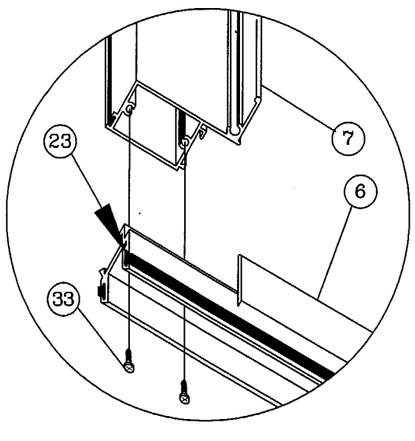

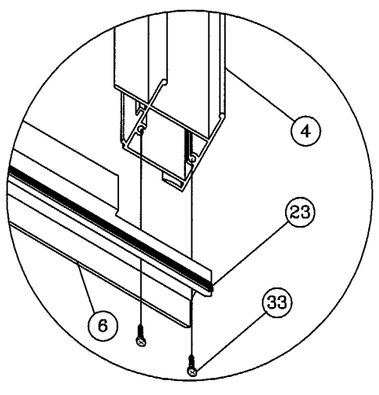

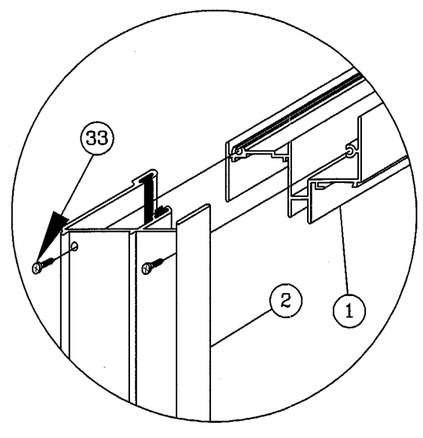

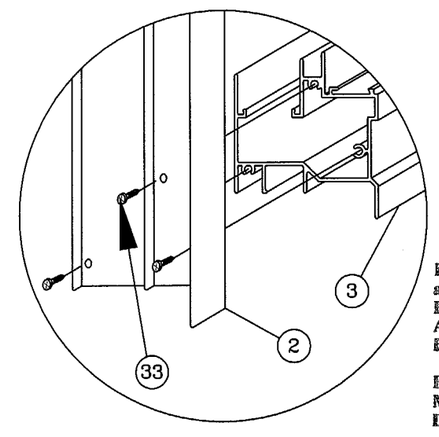

PRODUCT REVISED
as complying with the Florida
Building Code
Acceptance No. 03-0415.09
Expiration Date SEPT. 5, 2007
By Manuel Perez
Miami-Dade Product Control
Division

KELVYN WHITFIELD P.E
FLORIDA NO. 24140
1002 NE 116 STREET
MIAMI, FL 33161-6744

06/04/04
KELVYN WHITFIELD
FL REG ENG #24140

SIMONTON® WINDOWS
Corporate Headquarters
1 Cochrane Avenue
Pennsboro, WV 26415

Manufacturing Plant
4504 30th Street, West
Bradenton, FL 34207

SCALE: NTS	SHEET: 4 of 4	DRAWN BY: JRM	DATE: 6/19/02
SIZE: B	DRAWING NO: 02-0411-3	REV: 3	CHECKED BY: LNJ	DATE: 6/19/02
FILE: 02-0411-3		APPRV'D BY: CP	DATE: 6/19/02
SERIES: 002/002 STORMBREAKER PLUS SLIDER WINDOW			
TITLE: ALUMINUM IMPACT RESISTANT BOM & CORNER DETAILS			