MIAMI-DADE

BUILDING CODE COMPLIANCE OFFICE (BCCO)
PRODUCT CONTROL DIVISION

MIAMI-DADE COUNTY, FLORIDA
METRO-DADE FLAGLER BUILDING
140 WEST FLAGLER STREET, SUITE 1603
MIAMI, FLORIDA 33130-1563
(305) 375-2901 FAX (305) 375-2908

NOTICE OF ACCEPTANCE (NOA)

Vistawall Architectural Products
803 Airport Road
Terrell, TX 75160

SCOPE:
This NOA is being issued under the applicable rules and regulations governing the use of construction materials. The documentation submitted has been reviewed by Miami-Dade County Product Control Division and accepted by the Board of Rules and Appeals (BORA) to be used in Miami Dade County and other areas where allowed by the Authority Having Jurisdiction (AHJ).

This NOA shall not be valid after the expiration date stated below. The Miami-Dade County Product Control Division (In Miami Dade County) and/or the AHJ (in areas other than Miami Dade County) reserve the right to have this product or material tested for quality assurance purposes. If this product or material fails to perform in the accepted manner, the manufacturer will incur the expense of such testing and the AHJ may immediately revoke, modify, or suspend the use of such product or material within their jurisdiction. BORA reserves the right to revoke this acceptance, if it is determined by Miami-Dade County Product Control Division that this product or material fails to meet the requirements of the applicable building code.

This product is approved as described herein, and has been designed to comply with the High Velocity Hurricane Zone of the Florida Building Code.

DESCRIPTION: Series "NSH-212 "Outswing (NS) Doors w\ Series CW-250 Aluminum Storefront -Impact

APPROVAL DOCUMENT: Drawing No. **NSH212-01**, titled "Series NSH 212 Narrow stiles Hurricane door w\ Series CW-250 Aluminum Storefront", sheets 1 through 15 of 15, prepared by the manufacturer, dated 8/18/97 with last revision on 5/19/00, signed and sealed by Wm M. Meyers, P.E., bearing the Miami-Dade County Product Control Renewal stamp with the Notice of Acceptance number and expiration date by the Miami-Dade County Product Control Division.

MISSILE IMPACT RATING: Large and Small Missile Impact

LABELING: Each unit shall bear a permanent label with the manufacturer's name or logo, city, state and following statement: "Miami-Dade County Product Control Approved", unless otherwise noted herein.

RENEWAL of this NOA shall be considered after a renewal application has been filed and there has been no change in the applicable building code negatively affecting the performance of this product.

TERMINATION of this NOA will occur after the expiration date or if there has been a revision or change in the materials, use, and/or manufacture of the product or process. Misuse of this NOA as an endorsement of any product, for sales, advertising or any other purposes shall automatically terminate this NOA. Failure to comply with any section of this NOA shall be cause for termination and removal of NOA.

ADVERTISEMENT: The NOA number preceded by the words Miami-Dade County, Florida, and followed by the expiration date may be displayed in advertising literature. If any portion of the NOA is displayed, then it shall be done in its entirety.

INSPECTION: A copy of this entire NOA shall be provided to the user by the manufacturer or its distributors and shall be available for inspection at the job site at the request of the Building Official.
This NOA **renews NOA # 99-0114.05** and consists of this page 1 as well as approval document mentioned above.
The submitted documentation was reviewed by **Ishaq I. Chanda, P.E.**

4/25/13

PRODUCT CONTROL ACCEPTED

Vistawall Architectural Products

NOTICE OF ACCEPTANCE: EVIDENCE SUBMITTED
(For File ONLY. Not part of NOA)

A. DRAWINGS ***(Submitted under NOA #99-0114.05)***

1. Manufacturer's die drawings and sections.
2. Drawing No. **NSH212-01**, titled "Series NSH 212 Narrow stiles Hurricane door w\ Series CW-250 Aluminum Storefront", sheets 1 through 15 of 15, prepared by the manufacturer, dated 8/18/97 with last revision on 5/19/00, signed and sealed by Wm M. Meyers, P.E.

B. TESTS ***(Submitted under NOA #99-0114.05)*** (Formerly tested under SFBC-PA201, 202, 203)

1. Test reports on 1) Air Infiltration Test, per FBC, TAS 202-94
   2) Uniform Static Air Pressure Test, Loading per FBC,TAS 202-94
   3) Water Resistance Test, per FBC, TAS 202-94
   4) Large Missile Impact Test per FBC, TAS 201-94
   5) Cyclic Wind Pressure Loading per FBC, TAS 203-94
   6) Forced Entry Test, per FBC 2411 3.2.1 and TAS 202-94

   along with installation diagram of an aluminum window wall system marked-up by Hurricane Test Laboratory, Inc. Test Reports Nos. **HTL-0105-1108-97, HTL-0105-0510-98, HTL-0105-1108-97 & HTL-0105-0510.98**, reported dated 09/15/98, signed and sealed by Timothy S. Marshall, P.E. (This test report was revised by addendum letter dated May 02, 2000 & May 09, 2000 issued by HTL, signed and sealed by Vinu Abraham, P.E.
2. Supplement test report for alternate glazing (Viracon HRG-2)
   Test reports on 1) Air Infiltration Test, per FBC, TAS 202-94
   2) Uniform Static Air Pressure Test, Loading per FBC, TAS 20294
   3) Water Resistance Test, per FBC, TAS 202-94
   4) Large Missile Impact Test per FBC, TAS 201-94
   5) Cyclic Wind Pressure Loading per FBC, TAS 203-94

   along with installation diagram of an aluminum window wall system marked-up by Hurricane Test Laboratory, Inc. Test Reports Nos. **HTL-0105-1208-99 (Sp# 1, 2, 3 & 4)**, reported dated 01/03/00, signed and sealed by Vinu Abraham, P.E.
3. Test reports on 1) Air Infiltration Test, per FBC, TAS 202-94
   2) Uniform Static Air Pressure Test, Loading per FBC, TAS 20294
   3) Water Resistance Test, per FBC, TAS 202-94

   along with installation diagram of an aluminum window wall system marked-up by Hurricane Test Laboratory, Inc. Test Reports Nos. **HTL-0105-1208-99 (Sp# 1, 2, 3 & 4)**, report dated 12/08/99, signed and sealed by Vinu Abraham, P.E.

C. CALCULATIONS ***(Submitted under NOA #99-0114.05)***

1. Anchor Calculations & structural analysis, dated 12/11/98, revised on, 4-29-02, 05-01-02 and 05-08-2000, prepared, signed and sealed by Wm. M. Meyers, P.E.

Ishaq I. Chanda

Ishaq I. Chanda, P.E.
Product Control Examiner
NOA No 03-0417.03
Expiration Date: June 29, 2008
Approval Date: May 15, 2003

NOTICE OF ACCEPTANCE: EVIDENCE SUBMITTED

(For File ONLY. Not part of NOA)

D. MATERIAL CERTIFICATIONS ***(Submitted under NOA #99-0114.05)***

1. Test report No. ETC-97401-3770.04, dated 03-12-98, prepared by ETC Laboratories for "The Wind-Pane Laminated Hurricane Glazing", per checklist of approval of Plastic requirement of SFBC, issued to Globe Amerada Glass Co., signed by Joseph L. Doldan, P.E.
2. Notice of Acceptance No. 00-0614.09 issued to Viracon Inc for "HRG Laminated Glass", approved on 11/2/00, expiring on 10/16/03.
3. Notice of Acceptance No. 97-0527.03 issued to Viracon Inc for "HRG Laminated Glass", expired on 10/16/00.

E. STATEMENTS

1. Statement request letter dated 4/14/03 "Renewal w/ no change", issued by The Vistawall Group, signed by Fred Grunewald.
2. Letter dtd 04-09-03 stating "Still in Business and Engineering. Practice", signed by Wm. M. Meyers, P.E.
3. Statement letters ***(Submitted under NOA #99-0114.05)***

F. OTHER

1. Notice of Acceptance No. **99-0114.04** issued to Vistawall Architectural Products, expiring on 6/29/03.
2. Door testing proposal approved by BCCO dated 08-13-1997.
3. Glazing complies w/ ASTME-1300.

Ishaq I. Chanda

Ishaq I. Chanda, P.E.
Product Control Examiner
NOA No 03-0417.03
Expiration Date: June 29, 2008
Approval Date: May 15, 2003

PRODUCT RENEWED
as complying with the Florida
Building Code
Acceptance No. 03-0417.03
Expiration Date JUNE 29, 2008
By Ishaq I. Chanda
Miami Dade Product Control
Division

18765
Stout
5/24/00

ROBT. E. FISHER
WM. M. MEYERS, P.E.
Consulting Engineers
9301 N.E. 6th Ave. C-300
Miami Shores, FL 33138
(305) 758-3117 557-4006 Fax 362-6282

APPROVED AS COMPLYING WITH THE
SOUTH FLORIDA BUILDING CODE
DATE June 29, 2000
BY Ishaq I. Chanda
PRODUCT CONTROL DIVISION
BUILDING CODE COMPLIANCE OFFICE
ACCEPTANCE NO. 99-0114.05

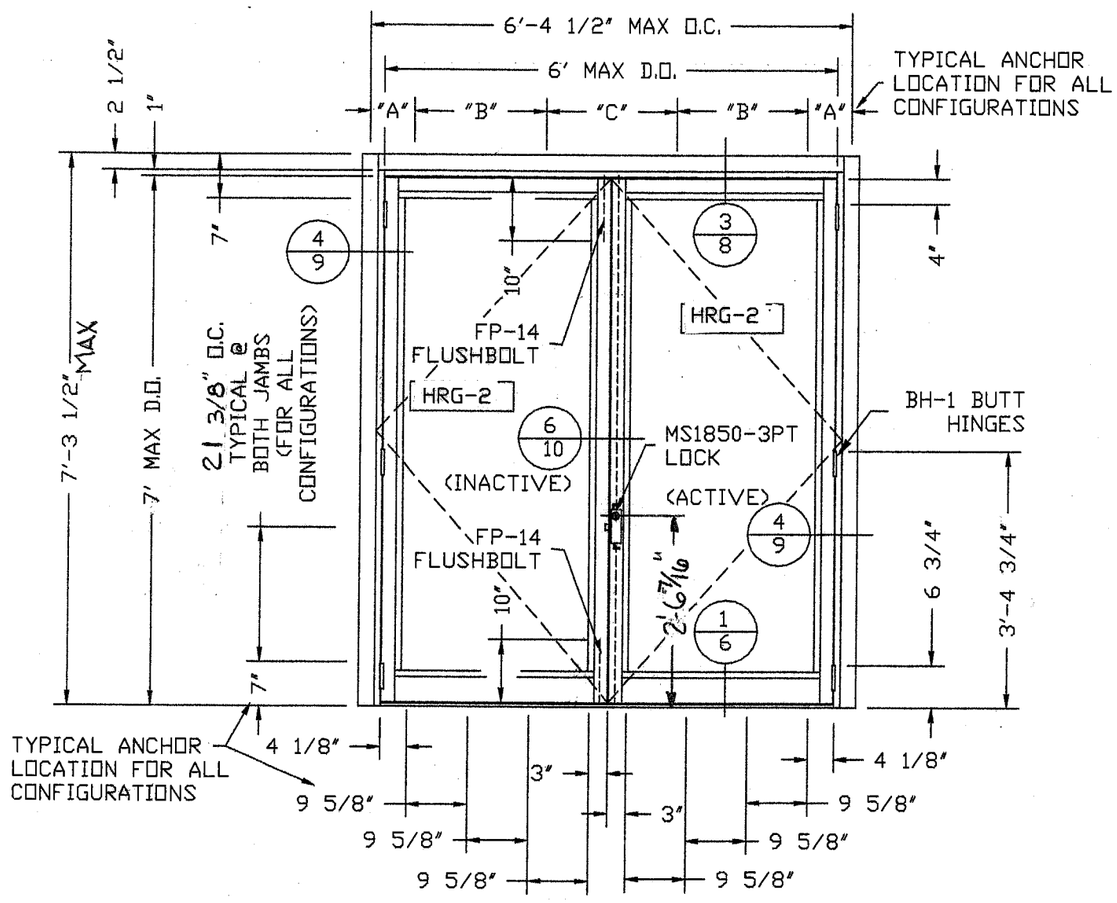

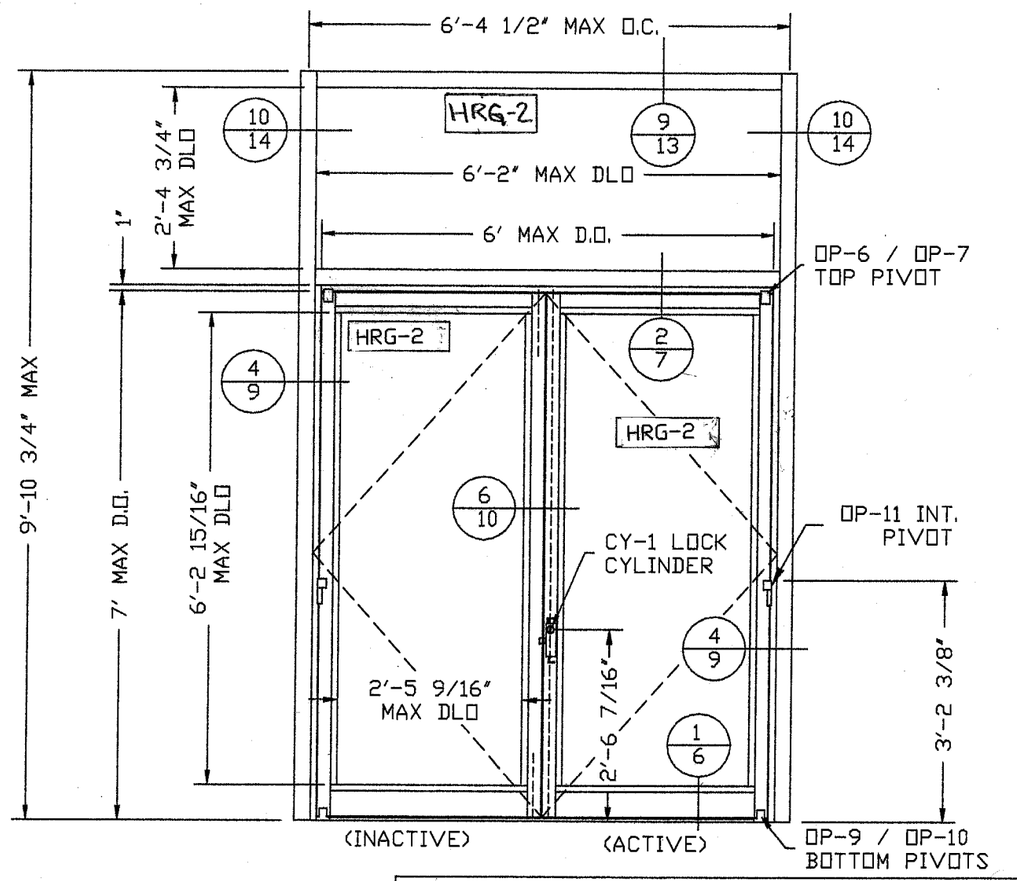

D.O. : DOOR OPENING
D.L.O. : DAYLIGHT OPENING

	WHERE WATER INFILTRATION REQUIREMENT IS NEEDED	WHERE WATER INFILTRATION REQUIREMENT IS NOT NEEDED
POSITIVE	NOT APPROVED	+ 80 psf
NEGATIVE	NOT APPROVED	- 80 psf

TYPICAL ANCHOR DIMENSIONS AT HEAD FOR ALL CONFIGURATIONS

SYSTEM	"A"	"B"	"C"
STD. ANCHOR	3 3/4"	23 13/16"	23 7/8"
ALT. ANCHOR	7"	20 13/16"	20 7/8"

NOTE:
1) REFER TO SEPERATE "VISTAWALL" CURRENT NOA FOR SERIES CW-250 WINDOW WALL SYSTEM (SHOWN DOTTED)
2) TYPICAL DOOR EXTRUSIONS ARE 6063-T5 ALLOY; FRAME, DOOR MEETING STILES AND GLASS STOP EXTRUSIONS ARE 6063-T6 ALLOY.
3) DOOR HARWARE AND ANCHORAGE DIMENSIONS SHOWN ARE TYPICAL FOR ALL CONFIGURATIONS.

NO.	REVISION	DATE	BY
	Rev. Glass	5/19/00	JC

VISTAWALL
ARCHITECTURAL PRODUCTS
PRODUCT DEVELOPMENT GROUP

SERIES NSH-212 NARROW STILE HURRICANE DOOR
W/ SERIES CW-250 ALUMINIUM STOREFRONT
"PATENT APPLIED FOR"

DATE 8-19-97
DRAWN BY JPC
DWG. NO. NSH212_01

SHEET 1 OF 15

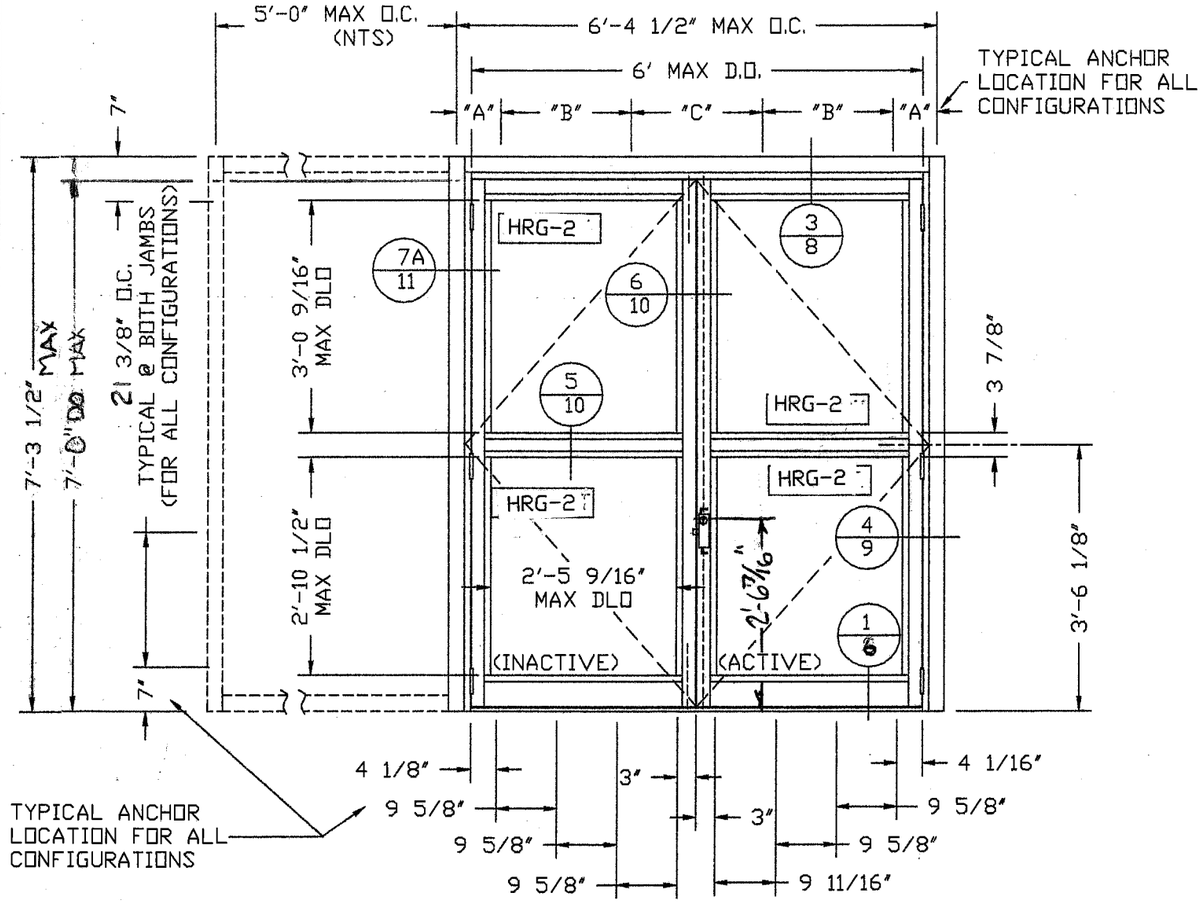

PRODUCT RENEWED
as complying with the Florida Building Code
Acceptance No. 03-0417.03
Expiration Date JUNE 29, 2008
By Ishaq I. Chanda
Miami Dade Product Control Division

18783
Stuart
5/24/00

ROBT. E. FISHER
WM. M. MEYERS, P.E.
Consulting Engineers
9301 N.E. 6th Ave. C-300
Miami Shores, FL 33138
(305) 758-3117 557-4006 Fax 362-6282

APPROVED AS COMPLYING WITH THE SOUTH FLORIDA BUILDING CODE
DATE June 29, 2000
BY Ishaq I. Chanda
PRODUCT CONTROL DIVISION
BUILDING CODE COMPLIANCE OFFICE
ACCEPTANCE NO. 99-0114.05

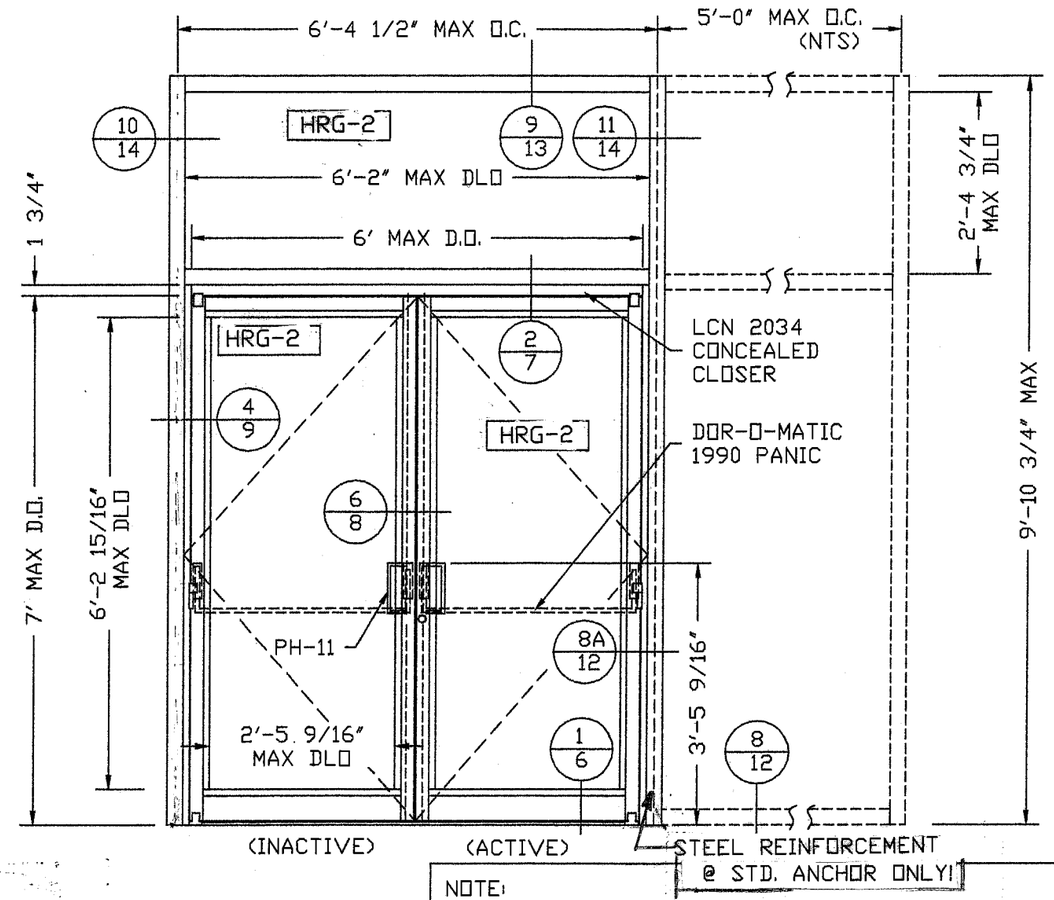

D.O. : DOOR OPENING
D.L.O. : DAYLIGHT OPENING

	WHERE WATER INFILTRATION REQUIREMENT IS NEEDED	WHERE WATER INFILTRATION REQUIREMENT IS NOT NEEDED
POSITIVE	NOT APPROVED	+ 80 psf
NEGATIVE	NOT APPROVED	- 80 psf

TYPICAL ANCHOR DIMENSIONS AT HEAD FOR ALL CONFIGURATIONS

SYSTEM	"A"	"B"	"C"
STD. ANCHOR	3 3/4"	23 13/16"	23 7/8"
ALT. ANCHOR	7"	20 13/16"	20 7/8"

NOTE:
1) REFER TO SEPERATE "VISTAWALL" CURRENT NOA FOR SERIES CW-250 WINDOW WALL SYSTEM (SHOWN DOTTED)
2) TYPICAL DOOR EXTRUSIONS ARE 6063-T5 ALLOY; FRAME, DOOR MEETING STILES AND GLASS STOP EXTRUSIONS ARE 6063-T6 ALLOY.
3) DOOR HARWARE AND ANCHORAGE DIMENSIONS SHOWN ARE TYPICAL FOR ALL CONFIGURATIONS.

NO.	REVISION	DATE	BY
	Revise Glass	5/18/00	JC

VISTAWALL ARCHITECTURAL PRODUCTS
PRODUCT DEVELOPMENT GROUP

SERIES NSH-212 NARROW STILE HURRICANE DOOR
W/ SERIES CW-250 ALUMINIUM STOREFRONT
"PATENT APPLIED FOR"

DATE 8-19-97
DRAWN BY JPC
DWG. NO. NSH212_01

SHEET 2 OF 15

ROBT. E. FISHER
WM. M. MEYERS, P.E.
Consulting Engineers
9301 N.E. 6th Ave. C-300
Miami Shores, FL 33138
(305) 758-3117 557-4006 Fax 362-6282

18755
Stuart
5/24/00

APPROVED AS COMPLYING WITH THE SOUTH FLORIDA BUILDING CODE
DATE June 29, 2000
BY Ishaq I. Chanda
PRODUCT CONTROL DIVISION
BUILDING CODE COMPLIANCE OFFICE
ACCEPTANCE NO. 99-0114.05

PRODUCT RENEWED
as complying with the Florida Building Code
Acceptance No. 03-0417.03
Expiration Date JUNE 29, 2008
By Ishaq I. Chanda
Miami Dade Product Control Division

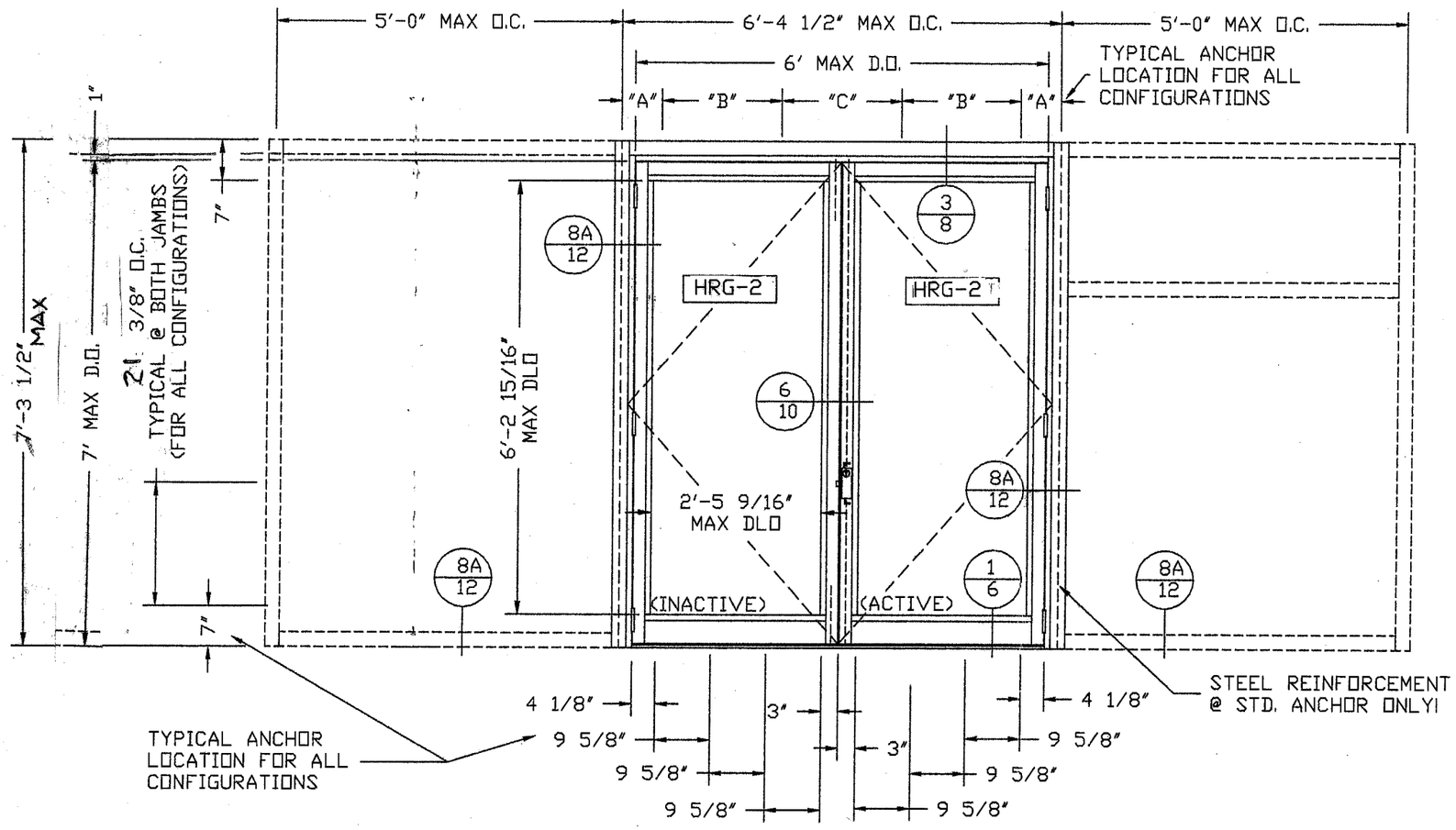

D.O. : DOOR OPENING
D.L.O. : DAYLIGHT OPENING

	WHERE WATER INFILTRATION REQUIREMENT IS NEEDED	WHERE WATER INFILTRATION REQUIREMENT IS NOT NEEDED
POSITIVE	NOT APPROVED	+ 80 psf
NEGATIVE	NOT APPROVED	- 80 psf

TYPICAL ANCHOR DIMENSIONS AT HEAD FOR ALL CONFIGURATIONS

SYSTEM	"A"	"B"	"C"
STD. ANCHOR	3 3/4"	23 13/16"	23 7/8"
ALT. ANCHOR	7"	20 13/16"	20 7/8"

NOTE:
1) REFER TO SEPERATE "VISTAWALL" CURRENT NOA FOR SERIES CW-250 WINDOW WALL SYSTEM (SHOWN DOTTED)
2) TYPICAL DOOR EXTRUSIONS ARE 6063-T5 ALLOY; FRAME, DOOR MEETING STILES AND GLASS STOP EXTRUSIONS ARE 6063-T6 ALLOY.
3) DOOR HARWARE AND ANCHORAGE DIMENSIONS SHOWN ARE TYPICAL FOR ALL CONFIGURATIONS.

NO.	REVISION	DATE	BY
	Revise Glass	5/18/00	[illegible]

VISTAWALL ARCHITECTURAL PRODUCTS
PRODUCT DEVELOPMENT GROUP

SERIES NSH-212 NARROW STILE HURRICANE DOOR
W/ SERIES CW-250 ALUMINIUM STOREFRONT
"PATENT APPLIED FOR"

DATE 8-19-97
DRAWN BY JPC
DWG. NO. NSH212_01

ROBT. E. FISHER
WM. M. MEYERS, P.E.
Consulting Engineers
9301 N.E. 6th Ave. C-300
Miami Shores, FL 33138
(305) 758-3117 557-4006 Fax 362-6282

APPROVED AS COMPLYING WITH THE SOUTH FLORIDA BUILDING CODE
DATE June 29, 2000
BY Ishaq I. Chanda
PRODUCT CONTROL DIVISION
BUILDING CODE COMPLIANCE OFFICE
ACCEPTANCE NO. 99-0114.05

PRODUCT RENEWED
as complying with the Florida Building Code
Acceptance No. 03-0417.03
Expiration Date June 29, 2008
By Ishaq I. Chanda
Miami Dade Product Control Division

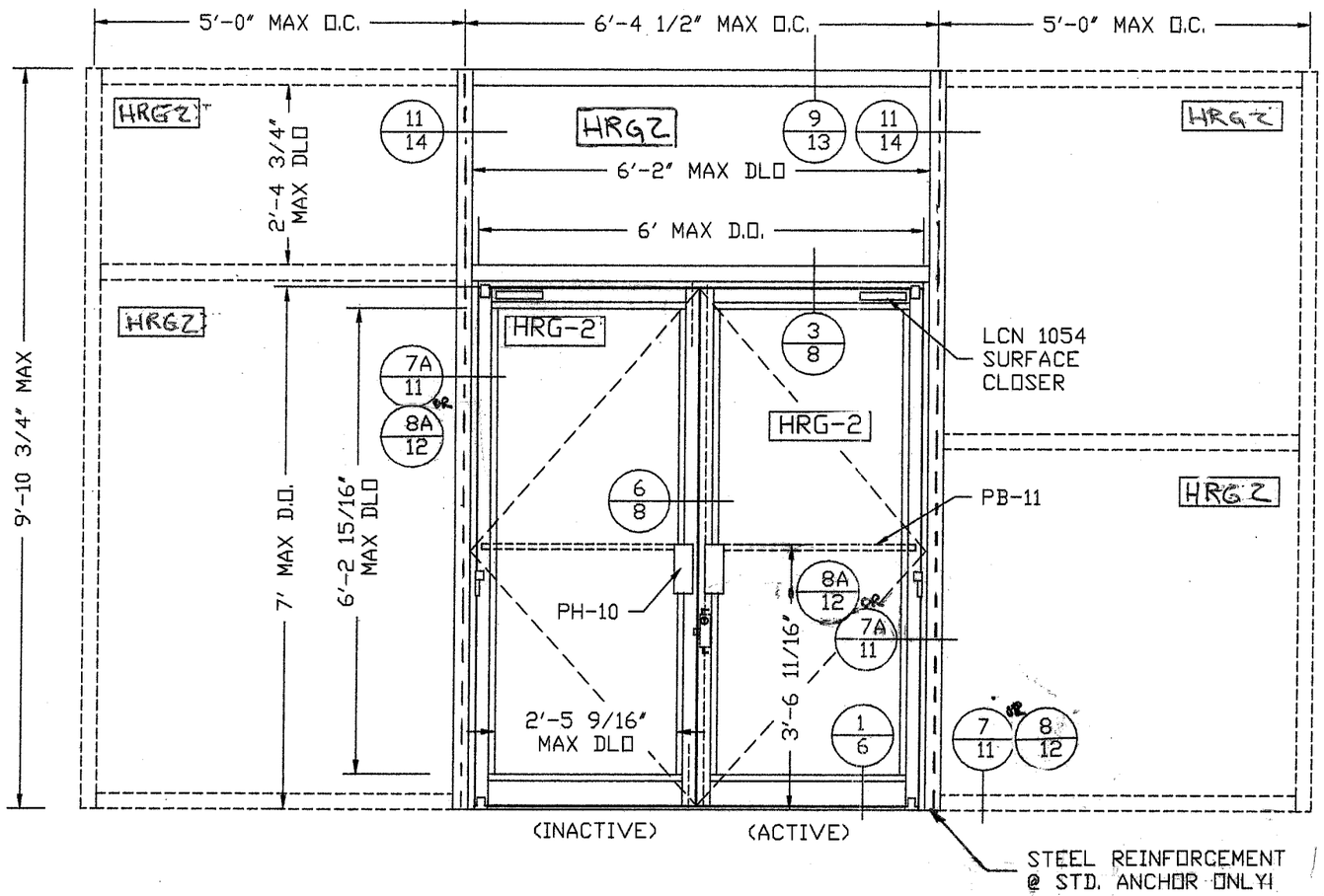

D.O. : DOOR OPENING
D.L.O. : DAYLIGHT OPENING

	WHERE WATER INFILTRATION REQUIREMENT IS NEEDED	WHERE WATER INFILTRATION REQUIREMENT IS NOT NEEDED
POSITIVE	NOT APPROVED	+ 80 psf
NEGATIVE	NOT APPROVED	- 80 psf

TYPICAL ANCHOR DIMENSIONS AT HEAD FOR ALL CONFIGURATIONS

SYSTEM	"A"	"B"	"C"
STD. ANCHOR	3 3/4"	23 13/16"	23 7/8"
ALT. ANCHOR	7"	20 13/16"	20 7/8"

NOTE:
1) REFER TO SEPERATE "VISTAWALL" CURRENT NOA FOR SERIES CW-250 WINDOW WALL SYSTEM (SHOWN DOTTED)
2) TYPICAL DOOR EXTRUSIONS ARE 6063-T5 ALLOY; FRAME, DOOR MEETING STILES AND GLASS STOP EXTRUSIONS ARE 6063-T6 ALLOY.
3) DOOR HARWARE AND ANCHORAGE DIMENSIONS SHOWN ARE TYPICAL FOR ALL CONFIGURATIONS.

NO.	REVISION	DATE	BY
	Rev. Glass, Add Details	5/18/00	R

VISTAWALL ARCHITECTURAL PRODUCTS
PRODUCT DEVELOPMENT GROUP

SERIES NSH-212 NARROW STILE HURRICANE DOOR
W/ SERIES CW-250 ALUMINIUM STOREFRONT
"PATENT APPLIED FOR"

DATE 8-19-97
DRAWN BY JPC
DWG. NO. NSH212_01

SHEET 4 OF 15

DOOR ACCESORIES & HARDWARE

DOOR HARDWARE		
MANUFACTURER	PART NO.	DESCRIPTION
ADAMS-RITE	MS1850-3PT	THREE POINT LOCK
	W/ REINFORCED BRAKCETS	
VISTAWALL	CY-1	LOCK CYLINDER
INTERNATIONAL	FP-14	FLUSHBOLTS
	a. 1/4"-20 GRADE 5 THREADED RODS	
	b. THREADED STEEL TIPS	
INTERNATIONAL	OP-6/OP-7	TOP PIVOT
" "	OP-9/OP-10	BOTTOM PIVOT
" "	OP-11	INTERMEDIATE PIVOT
VISTAWALL	PH-10	PULL HANDLE
" "	PB-11	PUSH BAR
" "	PH-11	PULL HANDLE @ PANIC
" "	TH-43	THRESHOLD
" "	TH-49	THRESHOLD @ WATER RESISTANT SINGLE DOOR
LCN	1054	SURFACE CLOSER
DOR-O-MATIC	1990	CONCEALED ROD PANIC
	W/ SPECIAL HEAVY DUTY TOP PINS	
HAGER	BH-1	BUTT HINGES
LCN	2034	CONCEALED OVERHEAD CLOSER
		W/ OFFSET ARMS

ACCESORY SCHEDULE		
PART NO.	DESCRIPTION	LOCATION
323	NYLON END CAP	GLASS JACK
3454	BRACKET	FLUSHBOLT
TH-44	CLIP	THRESHOLD
TH-51	CLIP	THRESHOL @ SINGLE DR
AC-2	CLIP	F-1 DR.HEAD
BA-26	BACK-UP PLT.	BUTT HINGE
BA-4	BACK-UP PLATE	INT. PIVOT (DR)
D-78	BACK-UP PLATE	INT. PIVOT (FRAME)
B10-D1	SHEAR BLOCK	DOOR RAILS
B10-D2	SHEAR BLOCK	DOOR RAILS
B10-D38	SHEAR BLOCK'	DOOR RAILS
B10-D71	SHEAR BLOCK	DOOR RAILS
CW250-FP-2	ANCHOR SHEARBLOCK	DOOR ANCHOR (STD)
CW250-FP-133	ANCHOR	DOOR JAMB (ALT)
CW250-FP-136	ANCHOR	DOOR JAMB (ALT)

GLASS SCHEDULE	
VIRACON HRG2	3/16" HEAT STRENGTHENED GLASS AT OUTER FACES, .080 POLYCARBONATE, .050 POLY URETHANE LAMINATE.W/ 1/2" OVERALL THICKNESS

REFERENCE CW-250 PRODUCT DRAWINGS FOR FRAME & SIDELITE HARDWARE AND ACCESORY INFORMATION.

WEATHERSTRIPPING SCHEDULE				
PART NO.	DESCRIPTION	MANUFACTURER	MATERIAL	LOCATION
V2108	1/4" X 1/4" DSA TAPE	NORTON	THERMALBOND	DOOR GLASS
V2106	3/16" X 5/16" SSA TAPE	NORTON	THERMALBOND	DOOR FRAME @ F1
V2110-20	5/16" X 5/8" DSA TAPE	NORTON	THERMALBOND	DOOR FRAME @ CW-689
D-125	DOOR STOP GASKET	VISTAWALL	SANTOPRENE	DOOR STOPS
WP-081	MEETING STILE SWEEPS	VISTAWALL	WOOLPILE	AS-6 ASTRAGAL
795	STRUCTURAL SILICONE	DOW-CORNING	SILICONE	DOOR GLASS

FASTENER SCHEDULE		
PART NO.	DESCRIPTION	LOCATION
FS-2	#8 X 1/2" PFH	DOOR SWEEP
FS-7	#10 X 3/4" PFH	DOOR RAILS @ B10
FS-8	#14 X 1" HH	F-1 HEADER
FS-11	#14 X 3" PFH	THRESHOLD
FS-18	1/4"-20 X 2 1/2" PRH	GLASS JACK
FS-22	#12-24 X 1/2" PFH	BUTT HINGES
FSN-37	1/4"-20 HEX NUT	DOOR JAMB
FS-39	1/4"-20 X 1" HHMS	DOOR RAILS @ B10
FS-42	#12 X 1/2" PFHUC	THRESHOLD
FS-50	#8-32 X 1/2" PFHMS	FLUSHBOLTS
FS-56	#10 X 1/2" PFHSTS	PANIC STOP
FSW-65	1/4" LOCKWASHER	DOOR RAILS @ B10
FSN-81	3/8"-16 HEX NUT	DOOR ANCHOR (ALT)
FSW-80	3/8" FLAT WASHER	DOOR ANCHOR (ALT)
FS-88	3/8"-16 X 1 1/2" HHB	DOOR ANCHOR (ALT)
FS-114	#8 X 3/8" PPH	GLASS STOPS
FSW-118	3/8" SPLIT LOCK WASHER	DOOR ANCHOR (ALT)
FS-256	#8 X 1 1/2" PRH	THRESHOLD CLIP
FS-77	#12-24 X 3/4" PFH	INT. PIVOT
	1/4"-20 X 3/4" PFHUC	INT. PIVOT
9582	1/4"-20 X 2 1/2" PFHMS	DOOR ANCHOR (ALT)
000660159	1/4" X 3" FH SLEEVE ANCHOR	THRESHOLD @ CONCRETE

12763
Stryd
8/24/00

ROBT. E. FISHER
WM. M. MEYERS, P.E.
Consulting Engineers
9301 N.E. 6th Ave. C-300
Miami Shores, FL 33138
(305) 758-3117 557-4006 Fax 362-6282

APPROVED AS COMPLYING WITH THE SOUTH FLORIDA BUILDING CODE
DATE June 29, 2000
BY Ishaq I. Chanda
PRODUCT CONTROL DIVISION
BUILDING CODE COMPLIANCE OFFICE
ACCEPTANCE NO. 79-0114.05

PRODUCT RENEWED
as complying with the Florida Building Code
Acceptance No. 03-0417.03
Expiration Date JUNE 29, 2008
By Ishaq I. Chanda
Miami Dade Product Control Division

NO.	REVISION	DATE	BY
	ADD FASTENERS & HARDWARE	5/17/00	[illegible]

VISTAWALL ARCHITECTURAL PRODUCTS
PRODUCT DEVELOPMENT GROUP

SERIES NSH-212 NARROW STILE HURRICANE DOORS
W/ SERIES CW-250 ALUMINIUM STOREFRONT
PER DADE COUNTY, FLORIDA CRITERIA

DATE 20-Aug-97
DRAWN BY PHIL CLARK
DWG.NO. nsh212_01

THRESHOLD FABRICATION NOTE:
LOCATE ANCHOR HOLES AT 4 1/8" FROM EACH END, AT CENTERLINE, 3" EACH SIDE OF CENTERLINE AND (4) ADDITIONAL HOLES SPACED EQUALLY ON EACH SIDE OF THRESHOLD.(9) TOTAL ANCHOR HOLES

18765
5/24/00
ROBT. E. FISHER
WM. M. MEYERS, P.E.
Consulting Engineers
9301 N.E. 6th Ave. C-300
Miami Shores, FL 33138
(305) 758-3117 557-4006 Fax 362-6282

APPROVED AS COMPLYING WITH THE SOUTH FLORIDA BUILDING CODE
DATE June 29, 2000
BY Ishaq I. Chanda
PRODUCT CONTROL DIVISION
BUILDING CODE COMPLIANCE OFFICE
ACCEPTANCE NO. 99-0114.05

PRODUCT RENEWED
as complying with the Florida Building Code
Acceptance No. 03-0417.03
Expiration Date June 29, 2008
By Ishaq I. Chanda
Miami Dade Product Control Division

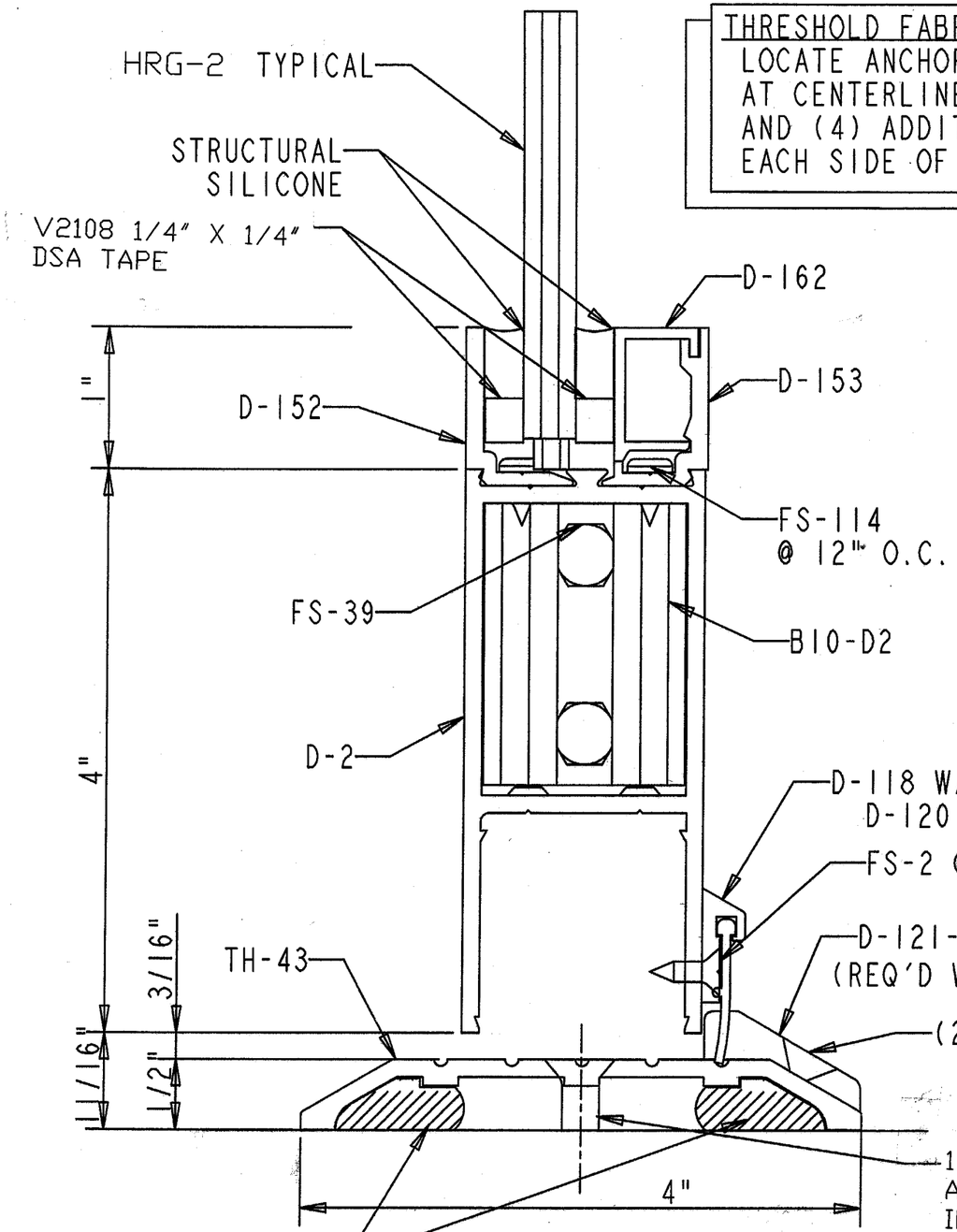

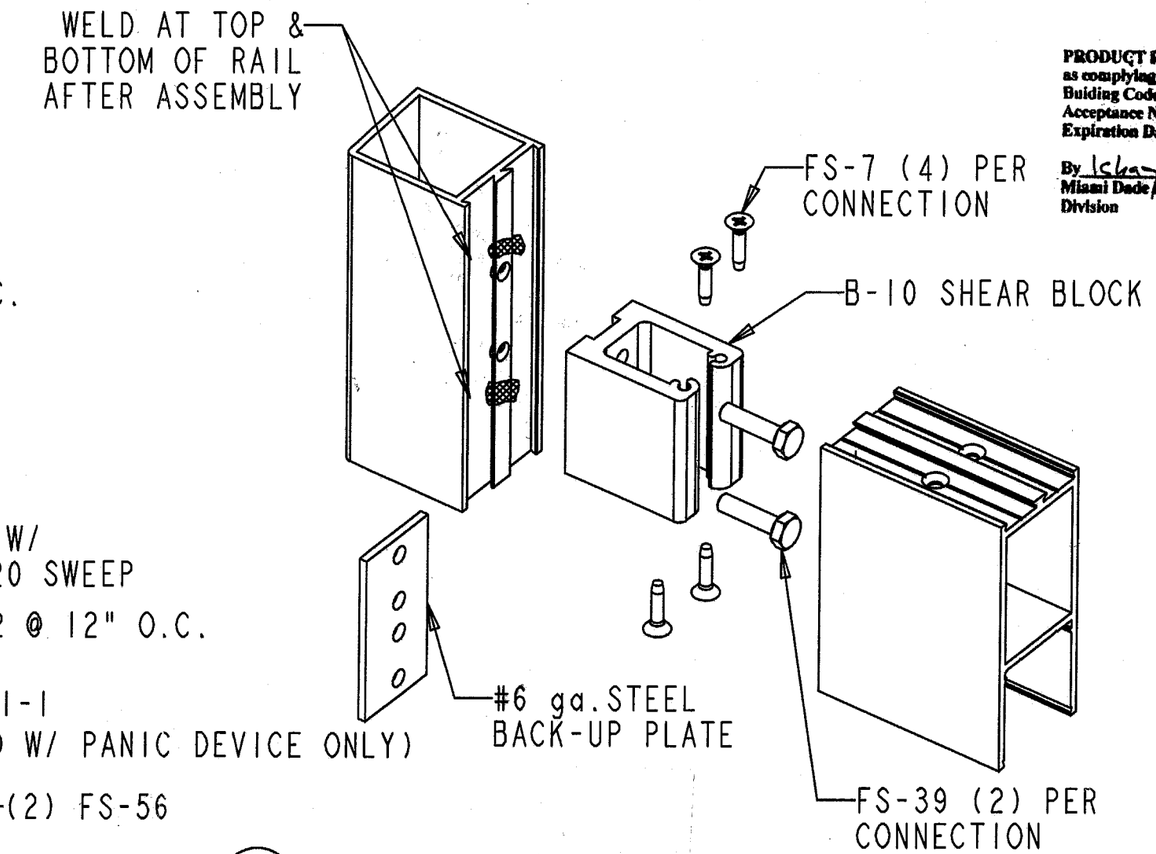

TYPICAL DOOR RAIL & MUNTIN CONNECTION

SCALE 0.500

NO.	REVISION	DATE	BY
	Rev GLASS, Anchor, Add Note	5/18/00	B

VISTAWALL ARCHITECTURAL PRODUCTS
PRODUCT DEVELOPMENT GROUP

SERIES NSH 212 NARROW STILE HURRICANE DOORS
W/ SERIES CW-250 ALUMINIUM STOREFRONT
"PATENT APPLIED FOR"

DATE 12-Aug-97
DRAWN BY PHIL CLARK
DWG. NO. nsh212_01

SHEET 6 OF 13

GLAZING NOTE:
USE V2108-20 (1/4" X 5/8") GLAZING TAPE AT INTERIOR AND EXTERIOR OF HRG-2.

18765
State
5/24/00
ROBT. E. FISHER
WM. M. MEYERS, P.E.
Consulting Engineers
9301 N.E. 6th Ave. C-300
Miami Shores, FL 33138
(305) 758-3117 557-4006 Fax 362-6282

APPROVED AS COMPLYING WITH THE SOUTH FLORIDA BUILDING CODE
DATE June 29, 2000
BY Ishaq I. Chanda
PRODUCT CONTROL DIVISION
BUILDING CODE COMPLIANCE OFFICE
ACCEPTANCE NO. 99-0114.05

PRODUCT RENEWED
as complying with the Florida Building Code
Acceptance No. 03-0417.03
Expiration Date JUNE 29, 2008
By Ishaq I. Chanda
Miami Dade Product Control Division

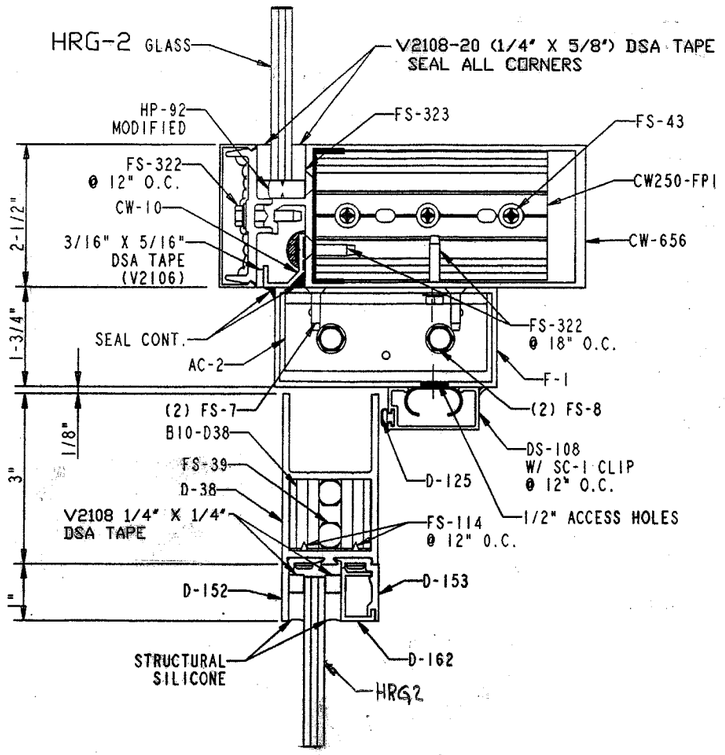

2

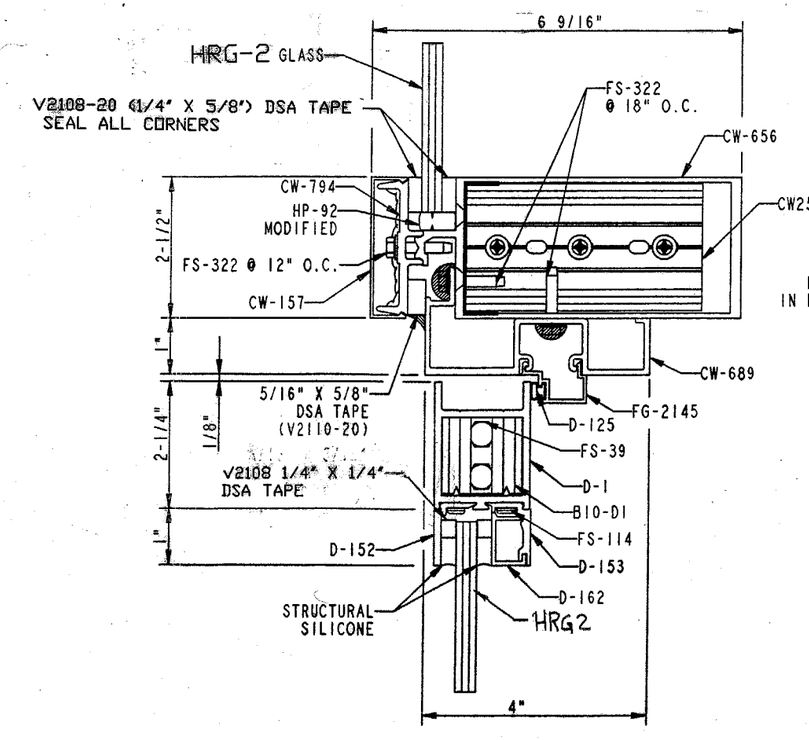

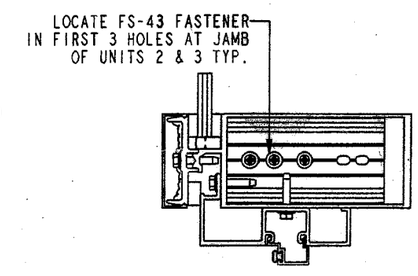

NO.	REVISION	DATE	BY
	Rev. Glass & Tape	5/18/00	BE

VISTAWALL ARCHITECTURAL PRODUCTS
PRODUCT DEVELOPMENT GROUP

SERIES NSH-212 NARROW STILE HURRICANE DOOR
W/ SERIES CW-250 ALUMINIUM STOREFRONT
"PATENT APPLIED FOR"

DATE 20-Aug-97
DRAWN BY PHIL CLARK
DWG. NO. nsh212_01

GLAZING NOTE:
USE V2108-20 (1/4" X 5/8") GLAZING TAPE AT INTERIOR AND EXTERIOR OF HRG-2.

18765
State.
5/24/00
ROBT. E. FISHER
WM. M. MEYERS, P.E.
Consulting Engineers
9301 N.E. 6th Ave. C-300
Miami Shores, FL 33138
(305) 758-3117 557-4006 Fax 362-6282

APPROVED AS COMPLYING WITH THE SOUTH FLORIDA BUILDING CODE
DATE June 29, 2000
BY Ishaq I. Chanda
PRODUCT CONTROL DIVISION
BUILDING CODE COMPLIANCE OFFICE
ACCEPTANCE NO. 99-0114.05

PRODUCT RENEWED
as complying with the Florida Building Code
Acceptance No. 03-0417.03
Expiration Date JUNE 29, 2008
By Ishaq I. Chanda
Miami Dade Product Control Division

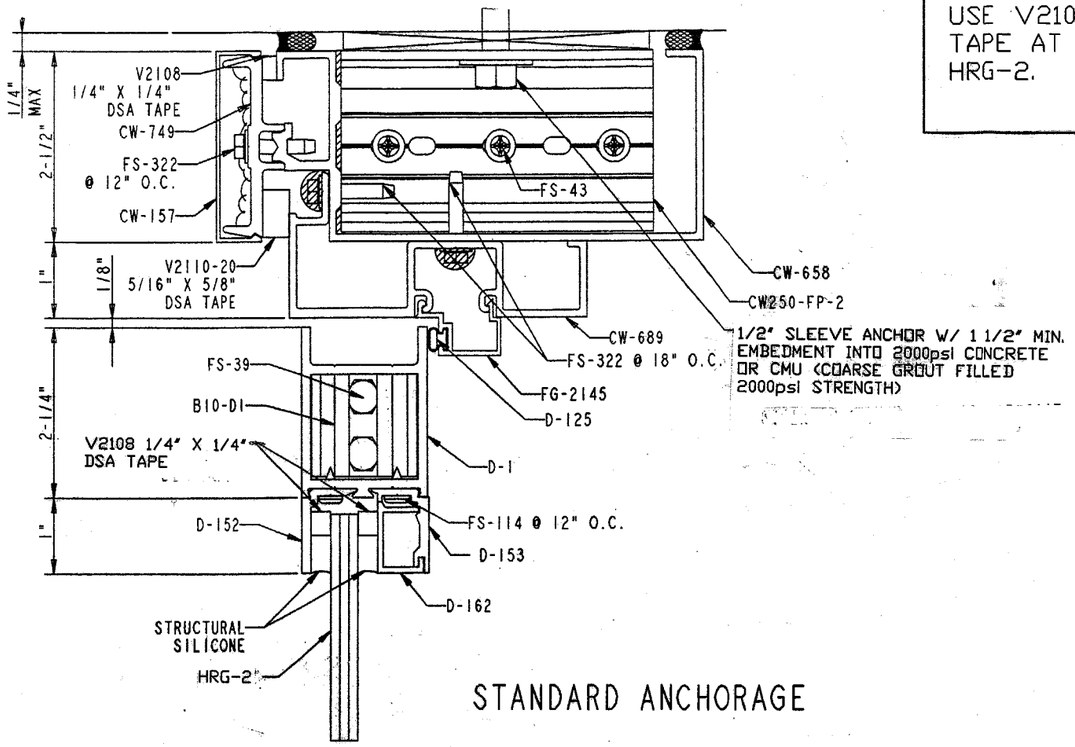

STANDARD ANCHORAGE

3

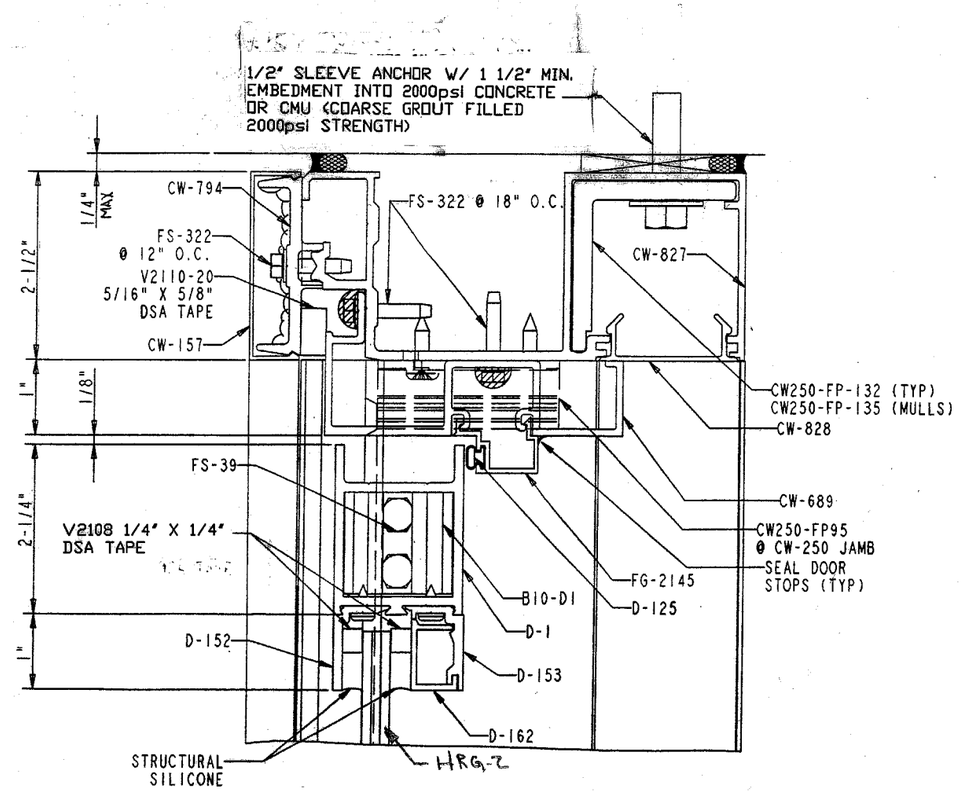

ALTERNATE ANCHORAGE

NO.	REVISION	DATE	BY
	Rev Glass, Anchor, & Tape	5/18/00	JR

VISTAWALL ARCHITECTURAL PRODUCTS
PRODUCT DEVELOPMENT GROUP

SERIES NSH-212 NARROW STILE HURRICANE DOOR
W/ SERIES CW-250 ALUMINIUM STOREFRONT

"PATENT APPLIED FOR"

DATE 20-Aug-97
DRAWN BY PHIL CLARK
DWG. NO. nsh212_01

SHEET 8 OF 15

GLAZING NOTE:
USE V2108-20 (1/4" X 5/8") GLAZING TAPE AT INTERIOR AND EXTERIOR OF HRG-2.

18965
Street
5/24/00

ROBT. E. FISHER
WM. M. MEYERS, P.E.
Consulting Engineers
9301 N.E. 6th Ave. C-300
Miami Shores, FL 33138
(305) 758-3117 557-4006 Fax 362-6282

APPROVED AS COMPLYING WITH THE SOUTH FLORIDA BUILDING CODE
DATE June 29, 2000
BY Ishaq I. Chanda
PRODUCT CONTROL DIVISION
BUILDING CODE COMPLIANCE OFFICE
ACCEPTANCE NO. 99-0114.05

PRODUCT RENEWED
as complying with the Florida Building Code
Acceptance No 03-0417.03
Expiration Date JUNE 29, 2008
By Ishaq I. Chanda
Miami Dade Product Control Division

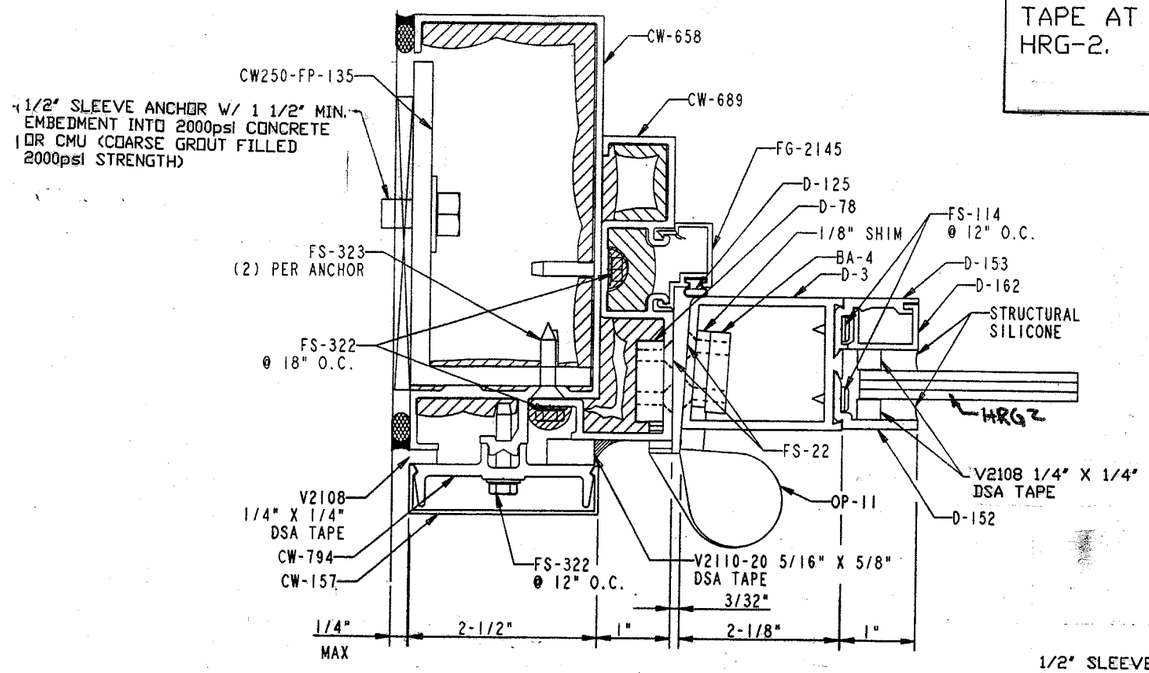

STANDARD ANCHORAGE

4

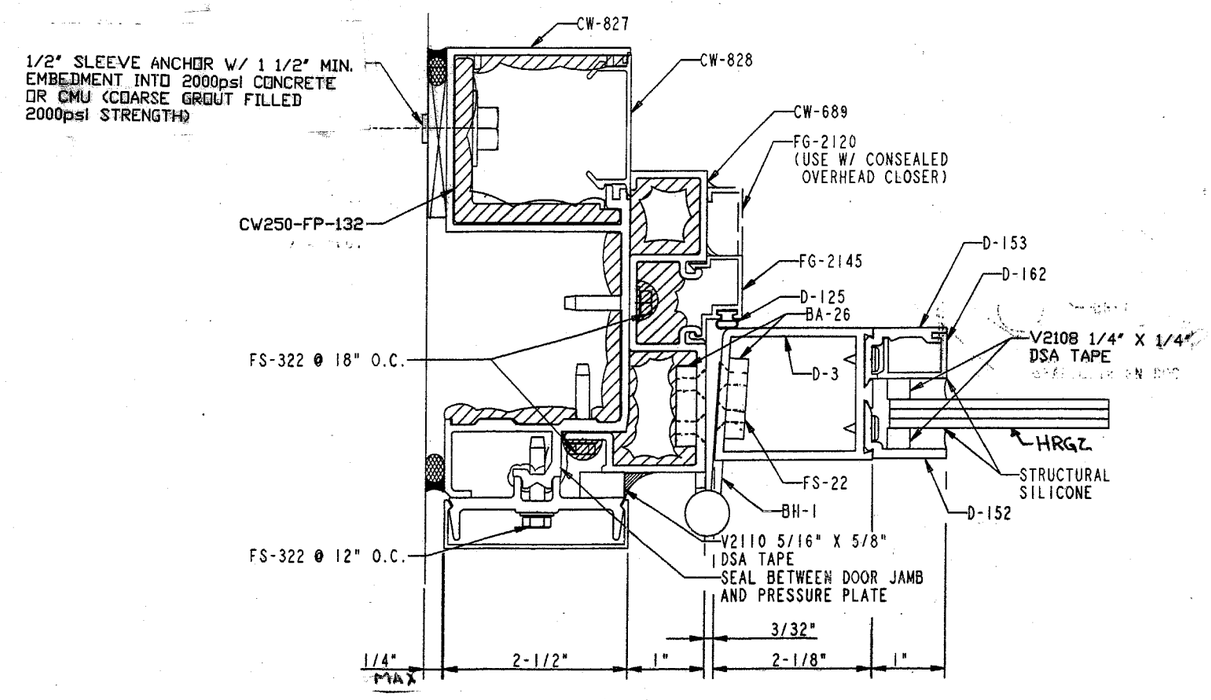

ALTERNATE ANCHORAGE

NO.	REVISION	DATE	BY
	Revise Glass, Tape & Anchor	5/19/00	[illegible]

VISTAWALL ARCHITECTURAL PRODUCTS
PRODUCT DEVELOPMENT GROUP

SERIES NSH-212 NARROW STILE HURRICANE DOOR
W/ SERIES CW-250 ALUMINIUM STOREFRONT
"PATENT APPLIED FOR"

DATE 20-Aug-97
DRAWN BY PHIL CLARK
DWG. NO. nsh212_01

SHEET 9 OF 15

GLAZING NOTE:
USE V2108-20 (1/4" X 5/8") GLAZING TAPE AT INTERIOR AND EXTERIOR OF HRG-2.

18785
State
5/24/00

ROBT. E. FISHER
WM. M. MEYERS, P.E.
Consulting Engineers
9301 N.E. 6th Ave. C-300
Miami Shores, FL 33138
(305) 758-3117 557-4006 Fax 362-6282

APPROVED AS COMPLYING WITH THE SOUTH FLORIDA BUILDING CODE
DATE June 29, 2000
BY Ishaq I. Chanda
PRODUCT CONTROL DIVISION
BUILDING CODE COMPLIANCE OFFICE
ACCEPTANCE NO. 99-0114.05

PRODUCT RENEWED
as complying with the Florida Building Code
Acceptance No. 03-0417.03
Expiration Date JUNE 29, 2008
By Ishaq I. Chanda
Miami Dade Product Control Division

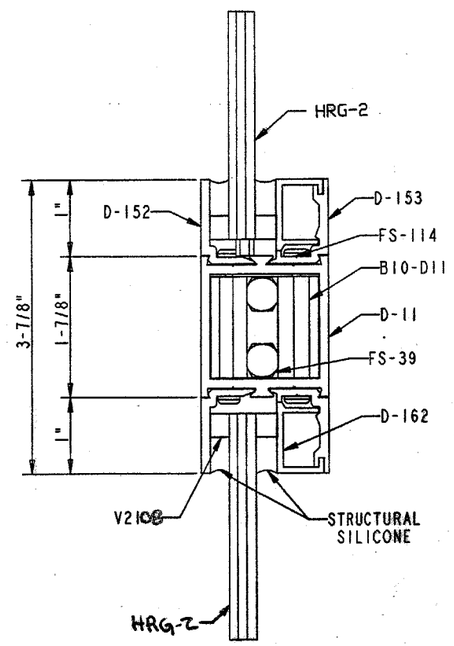

5
MUNTIN

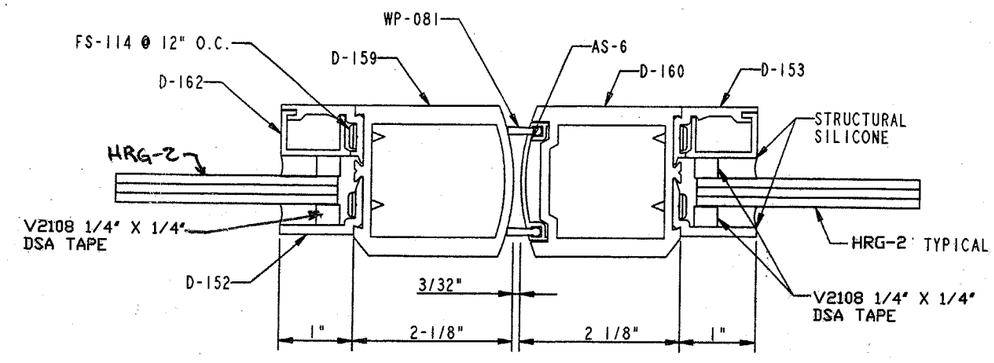

6

NO.	REVISION	DATE	BY
	Revise Glass & Tape	5/18/00	SE

VISTAWALL ARCHITECTURAL PRODUCTS
PRODUCT DEVELOPMENT GROUP

SERIES NSH-212 NARROW STILE HURRICANE DOOR
W/ SERIES CW-250 ALUMINIUM STOREFRONT
"PATENT APPLIED FOR"

DATE 20-Aug-97
DRAWN BY PHIL CLARK
DWG.NO. nsh212_01

SHEET 10 OF 15

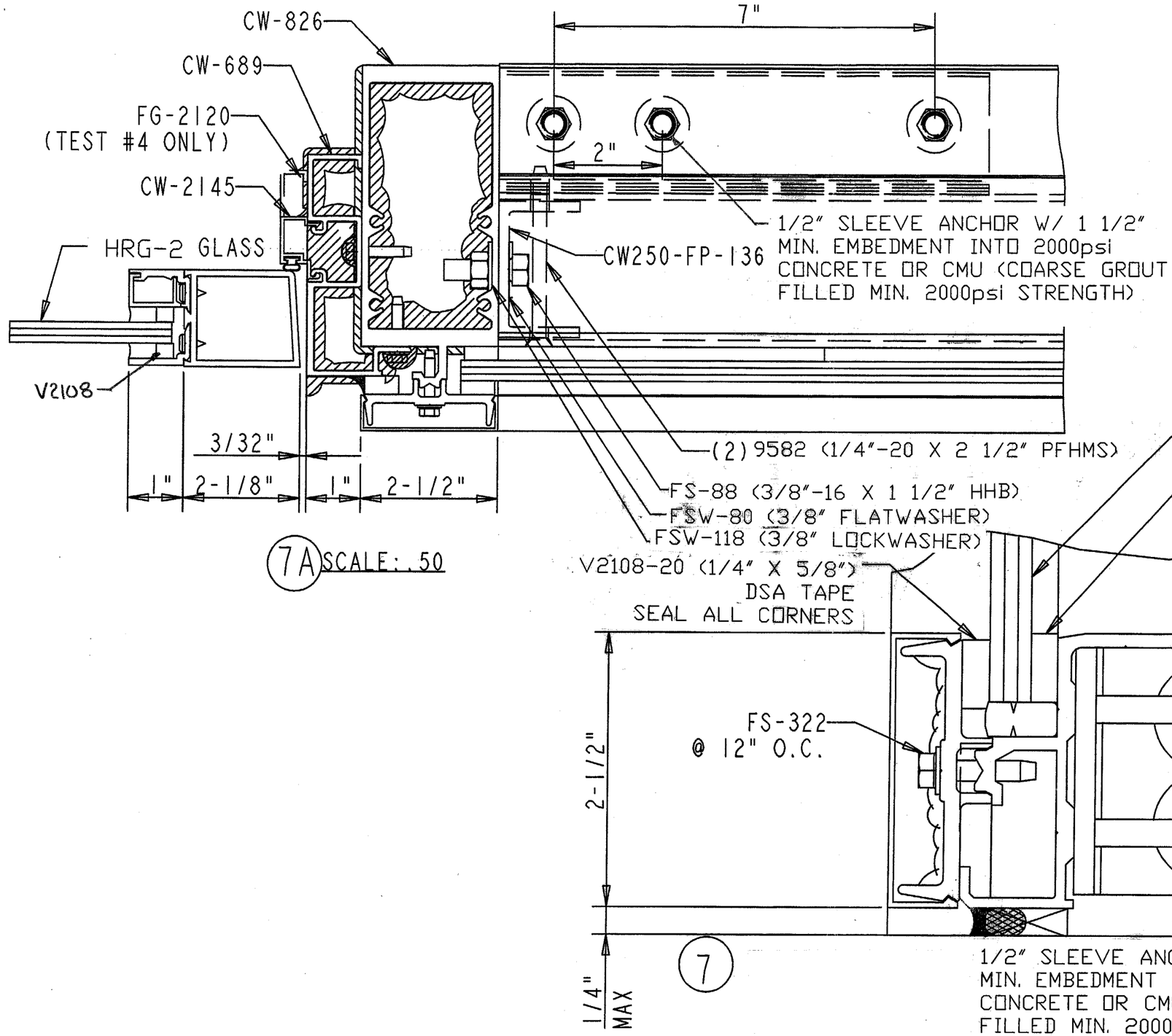

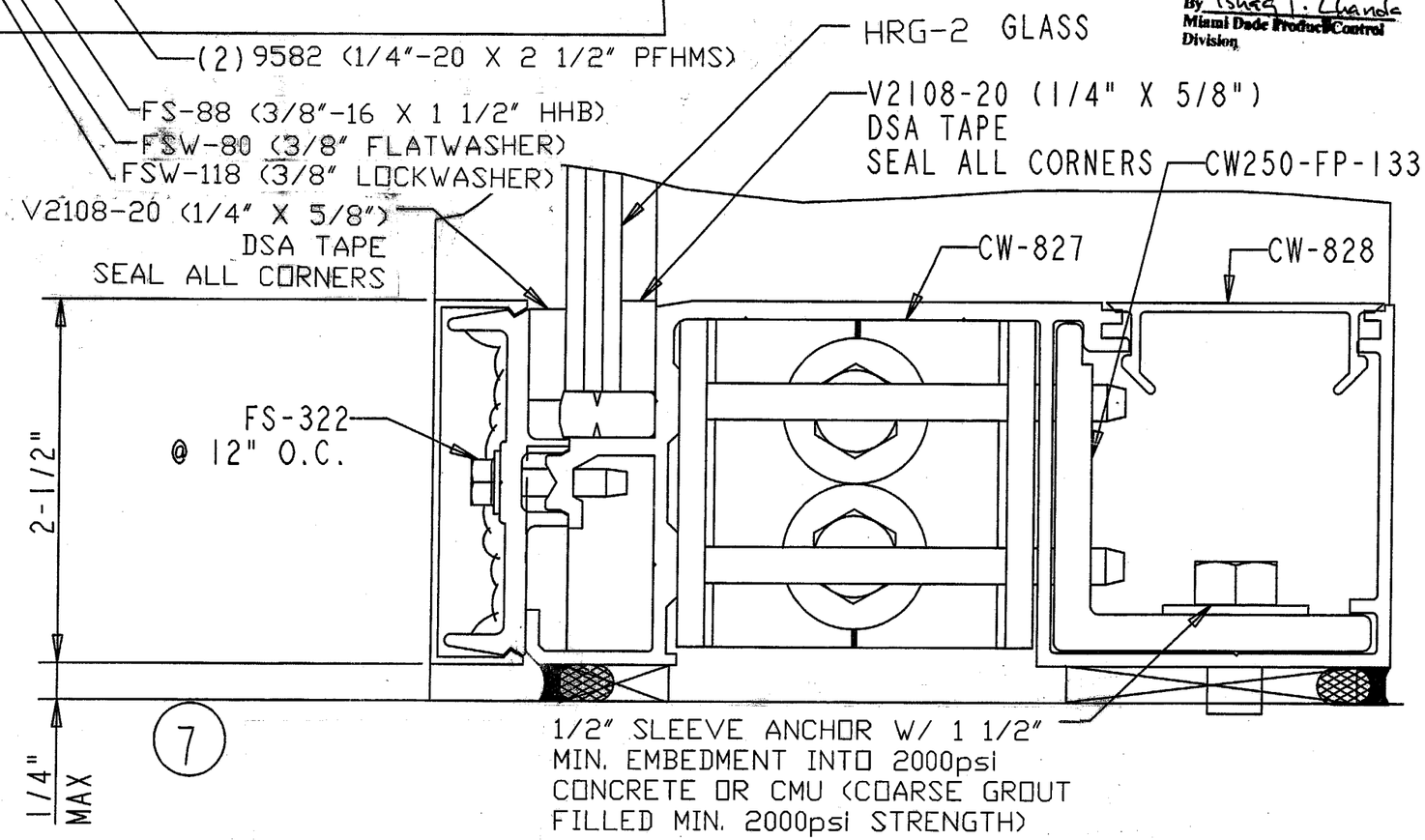

ROBT. E. FISHER
WM. M. MEYERS, P.E.
Consulting Engineers
9301 N.E. 6th Ave. C-300
Miami Shores, FL 33138
(305) 758-3117 557-4006 Fax 362-6282

APPROVED AS COMPLYING WITH THE SOUTH FLORIDA BUILDING CODE
DATE June 29, 2000
BY Ishaq I. Chanda
PRODUCT CONTROL DIVISION
BUILDING CODE COMPLIANCE OFFICE
ACCEPTANCE NO. 99-0114.05

GLAZING NOTE:
USE V2108-20 (1/4" X 5/8") GLAZING TAPE AT INTERIOR AND EXTERIOR OF HRG-2.

PRODUCT RENEWED
as complying with the Florida Building Code
Acceptance No. 03-0417.03
Expiration Date June 29, 2008
By Ishaq I. Chanda
Miami Dade Product Control Division

NO.	REVISION	DATE	BY
	Rev Anchors, Glass	5/18/00	R

VISTAWALL ARCHITECTURAL PRODUCTS
PRODUCT DEVELOPMENT GROUP

SERIES NSH-212 NARROW STILE HURRICANE DOOR
W/ SERIES CW-250 ALUMINIUM STOREFRONT
"PATENT APPLIED FOR"

DATE 25-Jul-97
DRAWN BY PHIL CLARK
DWG. NO. nsh212_01

SHEET 11 OF 15

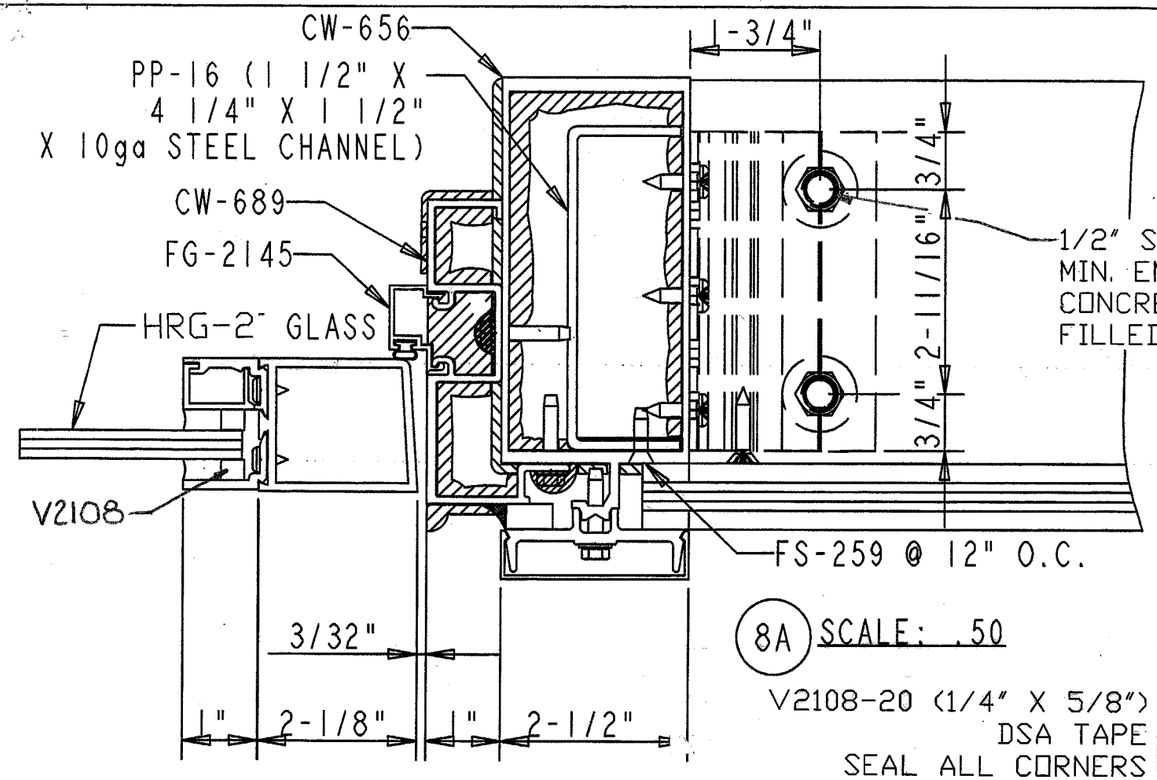

8A SCALE: .50

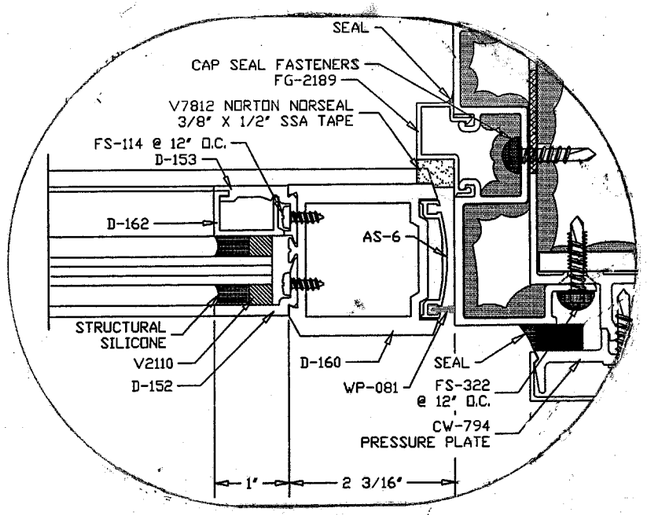

8B SEE DETAIL 8A ABOVE FOR FRAME AND ANCHORAGE, REFERENCE SHEET 15 FOR WATER RESISTANT SINGLE DOOR ELEVATIONS AND ADDITIONAL DETAILS/INFORMATION

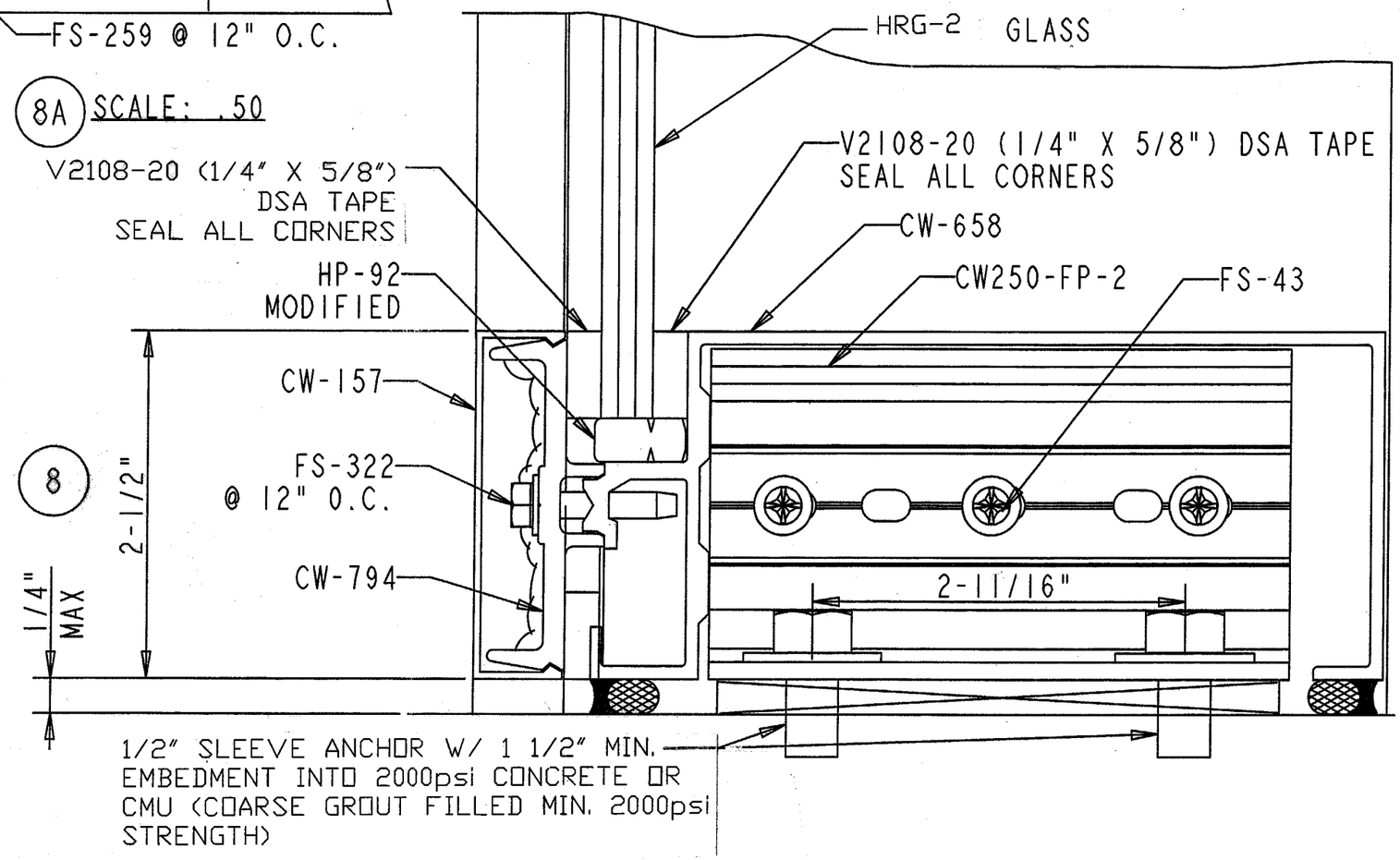

8

PRODUCT RENEWED as complying with the Florida Building Code
Acceptance No. 03-0417.03
Expiration Date JUNE 29, 2003
By Ishaq I. Chanda
Miami Dade Product Control Division

18766
Struct
5/24/00

ROBT. E. FISHER
WM. M. MEYERS, P.E.
Consulting Engineers
9301 N.E. 6th Ave. C-300
Miami Shores, FL 33138
(305) 758-3117 557-4006 Fax 362-6282

APPROVED AS COMPLYING WITH THE SOUTH FLORIDA BUILDING CODE
DATE June 29, 2000
BY Ishaq I. Chanda
PRODUCT CONTROL DIVISION
BUILDING CODE COMPLIANCE OFFICE
ACCEPTANCE NO. 99-0114.05

GLAZING NOTE:
USE V2108-20 (1/4" X 5/8") GLAZING TAPE AT INTERIOR AND EXTERIOR OF HRG-2.

NO.	REVISION	DATE	BY
	Rev. Anchor, Glass	5/18/00	JR

VISTAWALL ARCHITECTURAL PRODUCTS
PRODUCT DEVELOPMENT GROUP

SERIES NSH-212 NARROW STILE HURRICANE DOOR W/ SERIES CW-250 ALUMINIUM STOREFRONT
"PATENT APPLIED FOR"

DATE 27-Aug-97
DRAWN BY PHIL CLARK
DWG. NO. nsh212 01

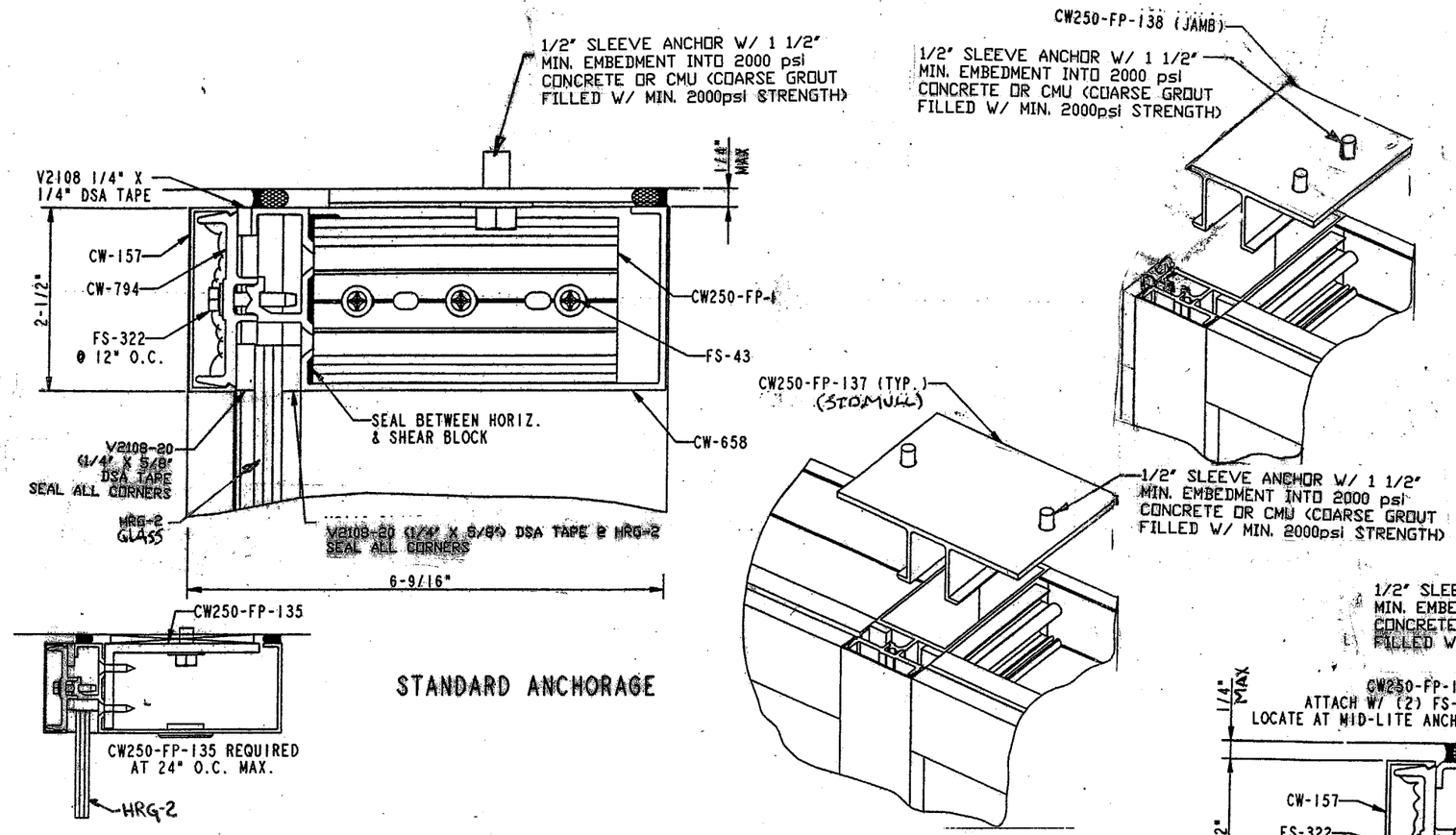

STANDARD ANCHORAGE

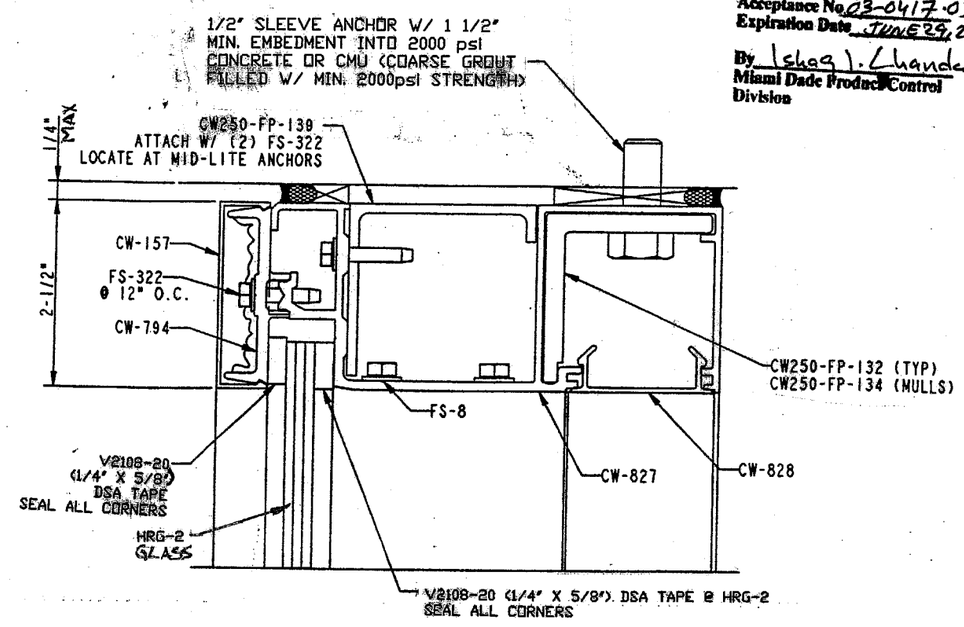

ALTERNATE ANCHORAGE

9

ROBT. E. FISHER
WM. M. MEYERS, P.E.
Consulting Engineers
9301 N.E. 6th Ave. C-300
Miami Shores, FL 33138
(305) 758-3117 557-4006 Fax 362-6282

APPROVED AS COMPLYING WITH THE SOUTH FLORIDA BUILDING CODE
DATE June 29, 2000
BY Ishaq I. Khanda
PRODUCT CONTROL DIVISION
BUILDING CODE COMPLIANCE OFFICE
ACCEPTANCE NO. 99-0114.05

GLAZING NOTE:
USE V2108-20 (1/4" X 5/8") GLAZING TAPE AT INTERIOR AND EXTERIOR OF HRG-2.

PRODUCT RENEWED
as complying with the Florida Building Code
Acceptance No. 03-0417-03
Expiration Date JUNE 29, 2008
By Ishaq I. Khanda
Miami Dade Product Control Division

NO	REVISION	DATE	BY
	Revise GLASS & Anchor App Detail	5-18-00	PC

VISTAWALL ARCHITECTURAL PRODUCTS
PRODUCT DEVELOPMENT GROUP

SERIES CW-250 WINDOW WALL SYSTEM
"PATENT APPLIED FOR"

DATE 22-Aug-97
DRAWN BY PHIL CLARK
DWG. NO. nsh212_01

SHEET 13 OF 15

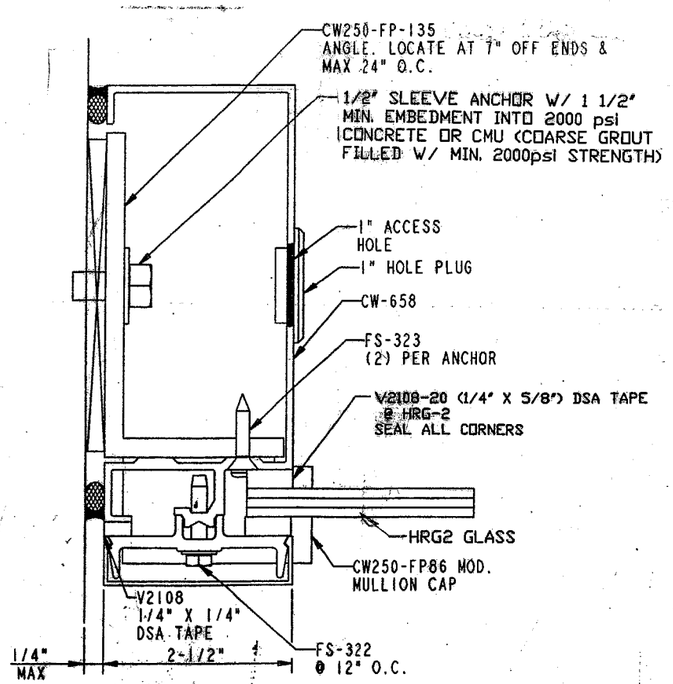

STANDARD ANCHORAGE

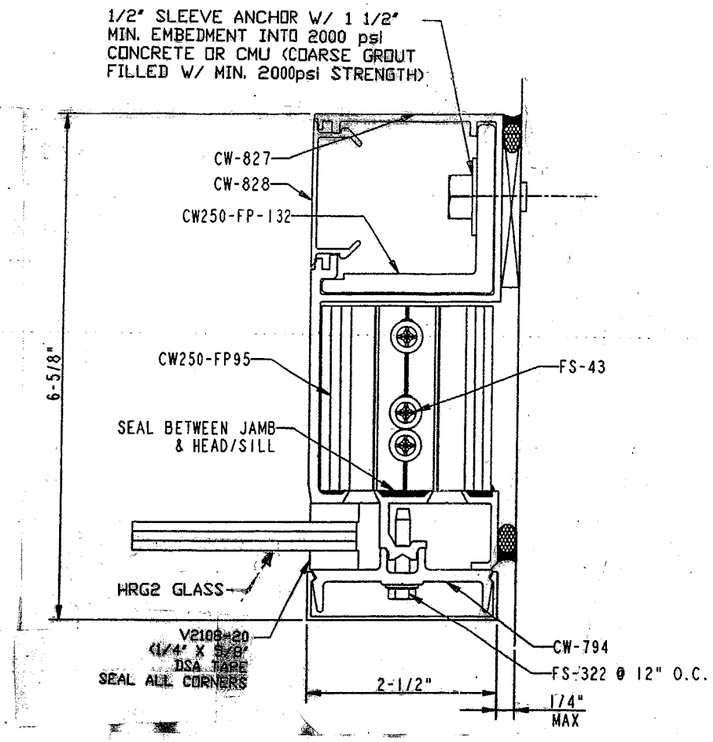

ALTERNATE ANCHORAGE

10

ANCHOR DETAILS (MATERIAL: ALUM. 6063-T6)	
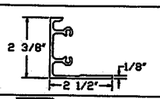	CW250-FP-2 (STD. SILL) DIM'S: 2 3/8" X 2 1/2" X 1/8"
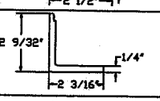	CW250-FP-133 (ALT. DOOR ANCHOR) DIM'S: 2 9/32" X 2 3/16" X 1/4" X 9" lg.
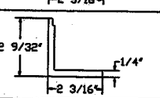	CW250-FP-132 (ALT. MID-LITE @ JAMB, HEAD & SILL) DIM'S: 2 9/32" X 2 3/16" X 1/4" X 4" lg.
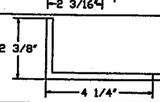	CW250-FP-135 (STD MID-LITE @ HEAD, SILL & JAMB) DIM'S: 2 3/8" X 4 1/4" X 1/4" X 4" lg.
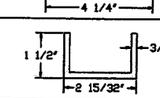	CW250-FP-136 (ALT. DOOR ANCHOR) DIM'S: 1 1/2" X 2 15/32" X 3/16" CHANNEL X 2 1/4"lg.

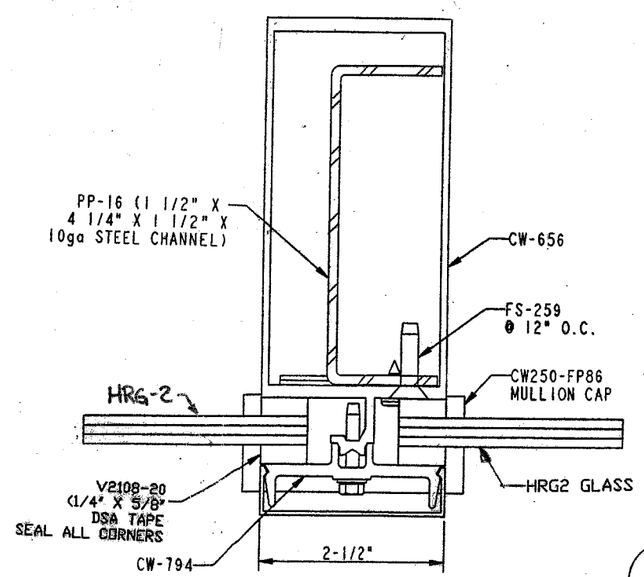

STANDARD ANCHORAGE

11

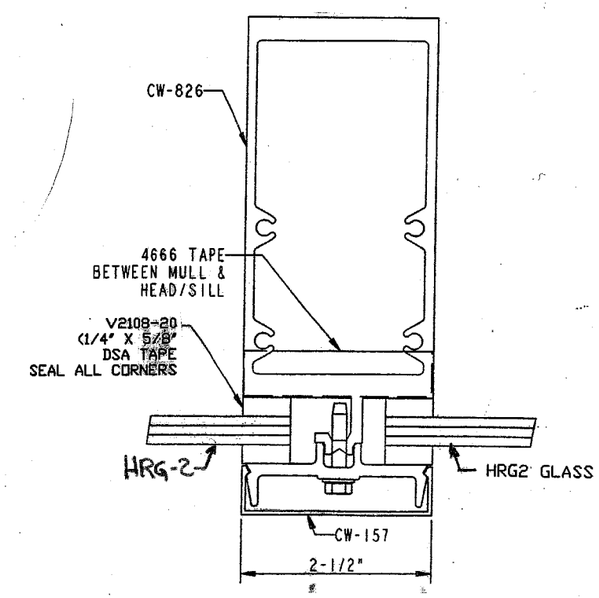

ALTERNATE ANCHORAGE

ROBT. E. FISHER
WM. M. MEYERS, P.E.
Consulting Engineers
9301 N.E. 6th Ave. C-300
Miami Shores, FL 33138
(305) 758-3117 557-4006 Fax 362-6282

13765
5/24/00

APPROVED AS COMPLYING WITH THE
SOUTH FLORIDA BUILDING CODE
DATE June 29, 2000
BY Ishay I. Chanda
PRODUCT CONTROL DIVISION
BUILDING CODE COMPLIANCE OFFICE
ACCEPTANCE NO. 99-0114.05

GLAZING NOTE:
USE V2108-20 (1/4" X 5/8") GLAZING TAPE AT INTERIOR AND EXTERIOR OF HRG-2.

PRODUCT RENEWED
as complying with the Florida Building Code
Acceptance No. 03-0417.03
Expiration Date JUNE 29, 2008
By Ishay I. Chanda
Miami Dade Product Control Division

NO.	REVISION	DATE	BY
	Rev. Glass, Add Anchor Table	5/18/00	PC

VISTAWALL ARCHITECTURAL PRODUCTS
PRODUCT DEVELOPMENT GROUP

SERIES CW-250 WINDOW WALL SYSTEM

"PATENT APPLIED FOR"

DATE 20-Aug-97
DRAWN BY PHIL CLARK
DWG. NO. nsh212-01

SHEET 14 OF 15

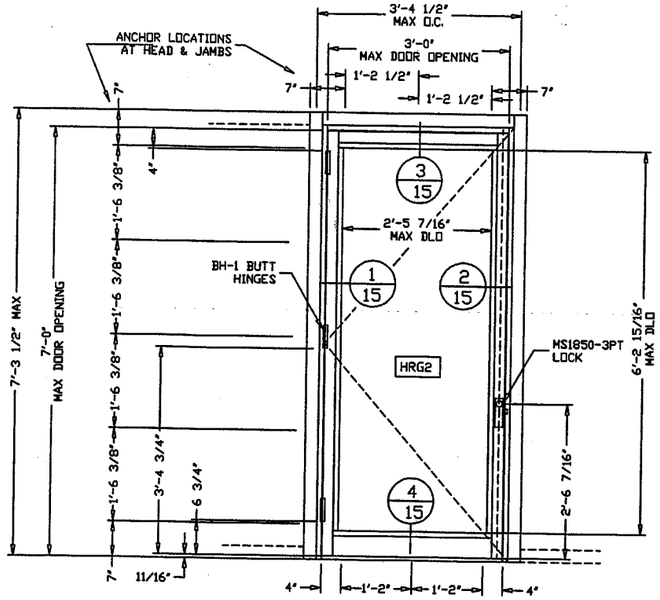

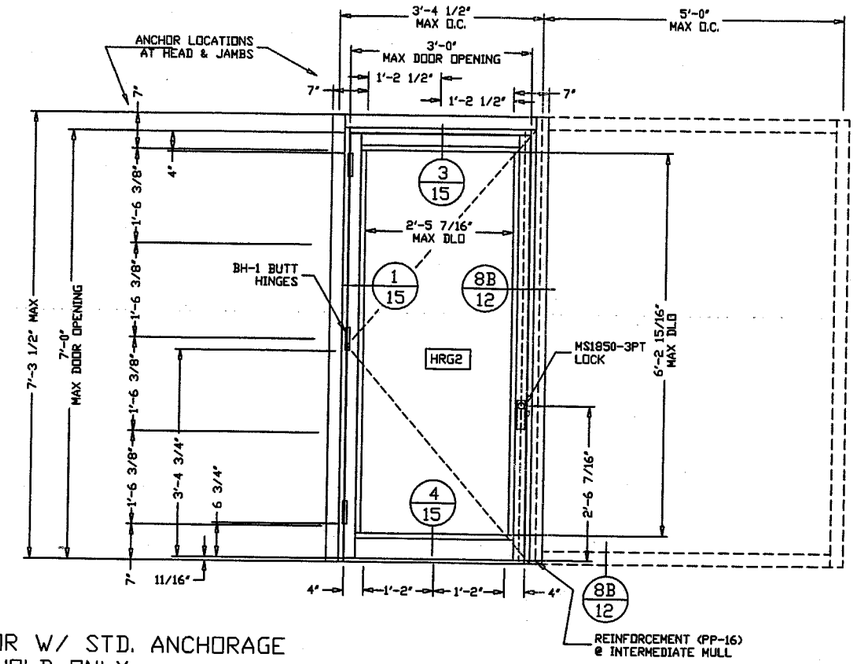

FOR SINGLE DOOR W/ STD. ANCHORAGE & TH-49 THRESHOLD ONLY.

	DESIGN PRESSURE
POSITIVE	80 psf
NEGATIVE	80 psf

NOTE: SINGLE DOOR SHOWN MEETS WATER INFILTRATION REQUIREMENTS.

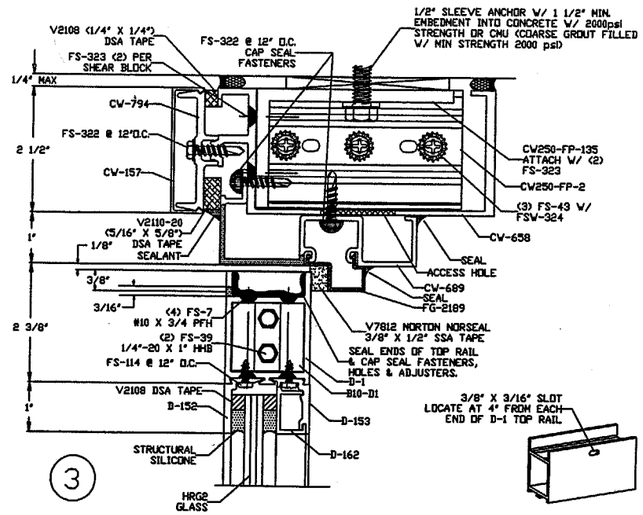

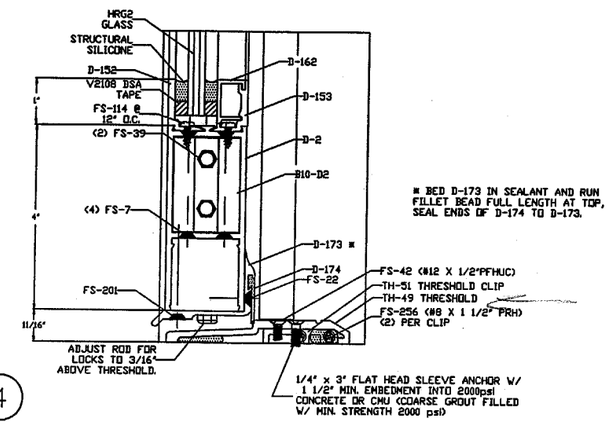

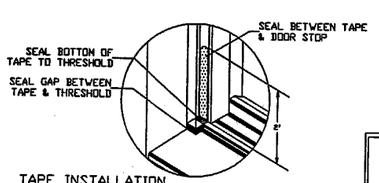

TAPE INSTALLATION AT HINGE STILE & THRESHOLD

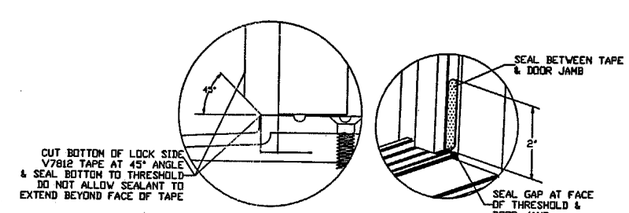

TAPE INSTALLATION AT LOCK STILE & THRESHOLD

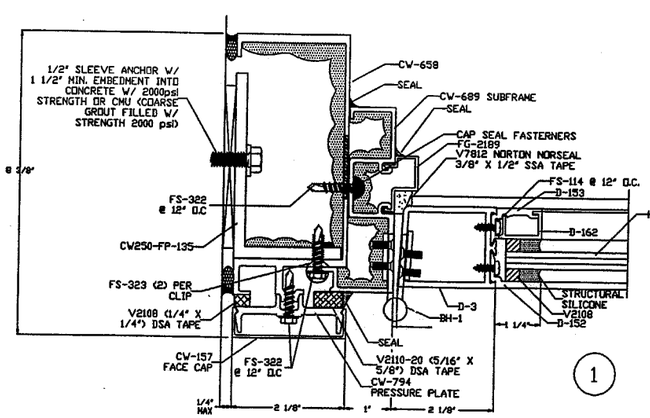

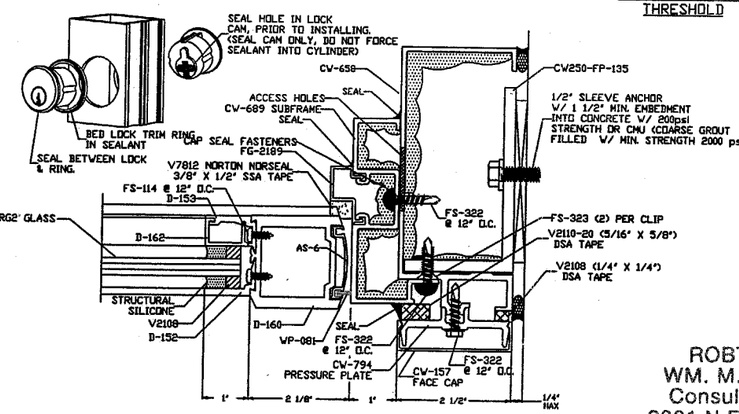

PRODUCT RENEWED as complying with the Florida Building Code Acceptance No. 03-0417.03 Expiration Date June 29, 2008 By Ishaq I. Chanda Miami Dade Product Control Division

NOTE:
V7812 (SSA) TAPE INSTALLED WITH ADHESIVE SIDE TO SUBFRAME ON HINGE STILE AND ADHESIVE TO DOOR STOP ON TOP & LOCK SIDE. SEAL CORNERS AND ENDS TO THRESHOLD
REFERENCE SHEET 6 FOR SEALANT INSTRUCTIONS FOR TAPE INSTALLATION

NOTES:
1) REFER TO SEPERATE 'VISTAWALL' CURRENT NOA FOR CW-250 WINDOW WALL SYSTEM.
3) TYPICAL DOOR EXTRUSIONS ARE 6063-T5 ALLOY; FRAME, LOCK STILE AND DOOR STOPS ARE 6063-T6 ALLOY.

Wm M Meyers
187755
STATE
5/24/00

APPROVED AS COMPLYING WITH THE SOUTH FLORIDA BUILDING CODE
DATE June 29, 2000
BY Ishaq I. Chanda
PRODUCT CONTROL DIVISION
BUILDING CODE COMPLIANCE OFFICE
ACCEPTANCE NO. 99-0114.05

ROBT. E. FISHER
WM. M. MEYERS, P.E.
Consulting Engineers
9301 N.E. 6th Ave. C-300
Miami Shores, FL 33138
(305) 758-3117 557-4006 Fax 362-6282

NO.	REVISION	DATE	BY

VISTAWALL ARCHITECTURAL PRODUCTS
PRODUCT DEVELOPMENT GROUP

NSH-212 WATER RESISTANT SINGLE DOOR W/ CW-250 ALUMINIUM STOREFRONT

THIS PRODUCT IS COVERED BY THE FOLLOWING PATENTS 5930955 5469665 OTHER PATENTS PENDING

DATE 5/4/99
DRAWN BY JPC
DWG.NO. NSH212_01

SHEET 15 OF 15