MIAMI-DADE

BUILDING CODE COMPLIANCE OFFICE (BCCO)
PRODUCT CONTROL DIVISION

MIAMI-DADE COUNTY, FLORIDA
METRO-DADE FLAGLER BUILDING
140 WEST FLAGLER STREET, SUITE 1603
MIAMI, FLORIDA 33130-1563
(305) 375-2901 FAX (305) 375-2908

NOTICE OF ACCEPTANCE (NOA)

Weather Shield Windows & Doors
One Weather Shield Plaza
Medford, WI 54451

SCOPE:
This NOA is being issued under the applicable rules and regulations governing the use of construction materials. The documentation submitted has been reviewed by Miami-Dade County Product Control Division and accepted by the Board of Rules and Appeals (BORA) to be used in Miami Dade County and other areas where allowed by the Authority Having Jurisdiction (AHJ).

This NOA shall not be valid after the expiration date stated below. The Miami-Dade County Product Control Division (In Miami Dade County) and/or the AHJ (in areas other than Miami Dade County) reserve the right to have this product or material tested for quality assurance purposes. If this product or material fails to perform in the accepted manner, the manufacturer will incur the expense of such testing and the AHJ may immediately revoke, modify, or suspend the use of such product or material within their jurisdiction. BORA reserves the right to revoke this acceptance, if it is determined by Miami-Dade County Product Control Division that this product or material fails to meet the requirements of the applicable building code.

This product is approved as described herein, and has been designed to comply with the High Velocity Hurricane Zone of the Florida Building Code.

DESCRIPTION: Series "Legacy Contempra" French Door Transom with Sash

APPROVAL DOCUMENT: Drawing No. **1210,** titled "Casement Energy Sash Transom", sheets 1 through 2 of 2, prepared by W.W. Schaefer Engineering & Consulting, P.A., dated 2/18/03, signed and sealed by Warren Schaefer, P.E., bearing the Miami-Dade County Product Control Approval stamp with the Notice of Acceptance number and approval date by the Miami-Dade County Product Control Division.

MISSILE IMPACT RATING: Large and Small Missile Impact

LABELING: Each unit shall bear a permanent label with the manufacturer's name or logo, city, state and following statement: "Miami-Dade County Product Control Approved", unless otherwise noted herein.

RENEWAL of this NOA shall be considered after a renewal application has been filed and there has been no change in the applicable building code negatively affecting the performance of this product.

TERMINATION of this NOA will occur after the expiration date or if there has been a revision or change in the materials, use, and/or manufacture of the product or process. Misuse of this NOA as an endorsement of any product, for sales, advertising or any other purposes shall automatically terminate this NOA. Failure to comply with any section of this NOA shall be cause for termination and removal of NOA.

ADVERTISEMENT: The NOA number preceded by the words Miami-Dade County, Florida, and followed by the expiration date may be displayed in advertising literature. If any portion of the NOA is displayed, then it shall be done in its entirety.

INSPECTION: A copy of this entire NOA shall be provided to the user by the manufacturer or its distributors and shall be available for inspection at the job site at the request of the Building Official.
This NOA consists of this page 1 as well as approval document mentioned above.
The submitted documentation was reviewed by **Theodore Berman, P.E.**

6/4/2003

PRODUCT CONTROL ACCEPTED

Weather Shield Windows & Doors

NOTICE OF ACCEPTANCE: EVIDENCE SUBMITTED

(For File ONLY. Not part of NOA)

A. DRAWINGS

1. Manufacturer's die drawings and sections.
2. Drawing No. **1210,** titled "Casement Energy Sash Transom", sheets 1 through 2 of 2, prepared by W.W. Schaefer Engineering & Consulting, P.A., dated 2/18/03, signed and sealed by Warren Schaefer, P.E.

B. TESTS

1. Test reports on 1) Air Infiltration Test, per FBC, TAS 202-94
   2) Uniform Static Air Pressure Test, Loading per FBC, TAS 202-94
   3) Water Resistance Test, per FBC, TAS 202-94
   4) Large Missile Impact Test per FBC, TAS 201-94
   5) Cyclic Wind Pressure Loading per FBC, TAS 203-94
   6) Forced Entry Test, per FBC 2411 3.2.1 and TAS 202-94

   along with marked-up drawings and installation diagram of a French Door Transom with Sash, prepared by Twin City Testing Corporation, Test Report No. TCTCW102011, dated 7/17/02, signed and sealed by Derrick Swanson, P.E.

C. CALCULATIONS

1. Anchor Calculations and structural analysis, prepared by W.W. Schaefer Engineering & Consulting, P.A., dated 3/19/03, signed and sealed by Warren Schaefer, P.E.

D. MATERIAL CERTIFICATIONS

1. Notice of Acceptance No. **01-0205.02** issued to Solutia, Inc. for "Saflex/Keepsafe Maximum" dated 5/17/01, expiring on 5/21/06.

E. STATEMENTS

1. Statement letter of conformance, dated 3/31/03, signed and sealed by Warren Schaefer, P.E.
2. Statement letter of no financial interest, dated 3/31/03, signed and sealed by Warren Schaefer, P.E.

F. OTHER

1. Letter from the consultant stating that the product is in compliance with the Florida Building Code (FBC).

Theodore Berman

Theodore Berman, P.E.
Deputy Director, Product Control Division
NOA No 03-0421.10
Expiration Date: June 26, 2008
Approval Date: June 26, 2003

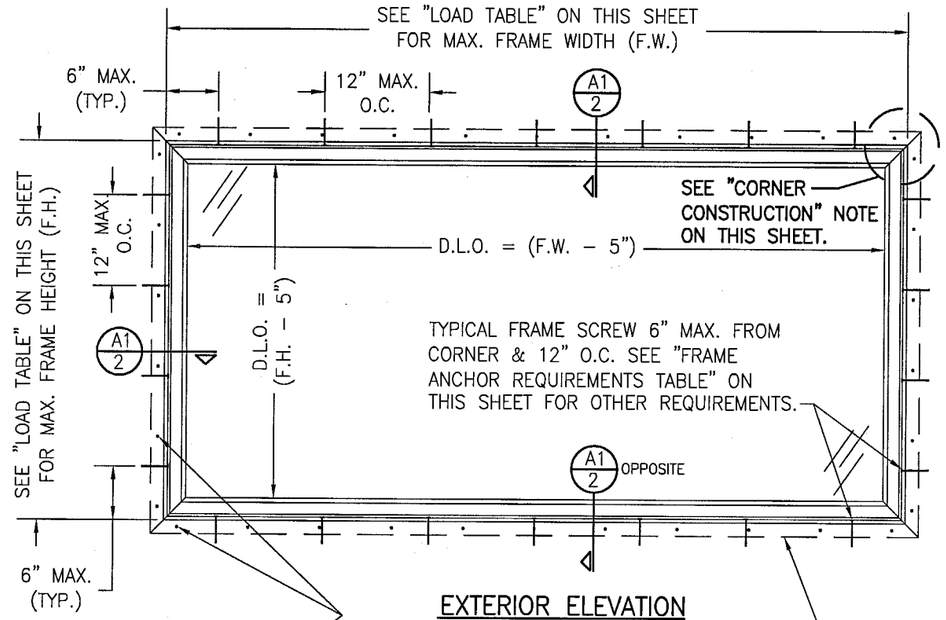

11 GA. X 1 1/2" ROOFING NAILS OR NO. 7 X 1 5/8" DRYWALL SCREWS SPACED AS REQUIRED TO SECURE & SEAL NAILING FIN

EXTERIOR ELEVATION SINGLE FIXED WINDOW

SCALE: 3/4" = 1'–0"

NAILING FIN IS OPTIONAL & MAY BE SCORED AND REMOVED WHEN REQUIRED FOR A DIRECT MOUNT CONDITION. (NAIL FIN SHALL NOT ACT AS A SUBSTITUTE FOR THE FRAME SHEAR SCREWS SPECIFIED)

FRAME CORNER CONTRUCTION

AT EACH CORNER THE WOOD FRAME MEMBERS ARE DADO CUT, GLUED, PLACED TOGETHER AND MECHANICALLY FASTENED WITH THREE NO. 8 X 2 1/2" LONG DRYWALL SCREWS.

AT EACH CORNER THE ALUMINUM FRAME CLADDING MEMBERS ARE MITER CUT, SEALED, BUTTED TOGETHER AND MECHANICALLY FASTENED USING ONE NO. 8 X 1 1/4" SCREW PER CORNER.

SASH CORNER CONSTRUCTION

AT EACH CORNER THE WOOD SASH MEMBER ENDS ARE MORTISE & TENON CUT, SEALED WITH A SINGLE BEAD OF SILICONE AND WOOD GLUE TO THE WOOD JOINT SURFACES. TWO 2 1/2" BRAD NAILS AND ONE NO. 6 X 1 1/4" PFH PILOT POINT SCREW WITH NO. 5 HEAD ARE USED TO SECURE EACH OF THE CORNERS.

AT EACH CORNER AN ALUMINUM CORNER KEY IS INSERTED IN THE ALUMINUM SASH CLADDING MEMBERS. CLADDING IS MECHANICALLY SECURED WITH ONE NO. 8 X 1 1/4" SMS SCREW & SEALED WITH SILICONE.

ALLOWABLE PRESSURE TABLE

7/16" SOLUTIA KEEP SAFE LAMINATED GLASS (3/16" GLASS)

(1) SHORT DIMENSION	DESIGN LOAD CAPACITY (PSF)																					
	POS.	NEG	POS.	NEG	POS.	NEG	POS.	NEG	POS.	NEG	POS.	NEG	POS.	NEG	POS.	NEG	POS.	NEG	POS.	NEG	POS.	NEG
24"	60.0	75.0	60.0	75.0	60.0	75.0	60.0	75.0	60.0	75.0	60.0	75.0	60.0	75.0	60.0	75.0	60.0	75.0	60.0	75.0	60.0	75.0
30"	60.0	75.0	60.0	75.0	60.0	75.0	60.0	75.0	60.0	75.0	60.0	75.0	60.0	75.0	60.0	75.0	60.0	75.0	60.0	75.0		
36"	60.0	75.0	60.0	75.0	60.0	75.0	60.0	75.0	60.0	75.0	60.0	75.0	60.0	75.0	60.0	72.5	60.0	70.4				
42"	60.0	75.0	60.0	75.0	60.0	75.0	60.0	69.2	63.2	63.2	59.5	59.5	57.0	57.0								
48"	52.5	65.6	52.5	65.6	52.5	64.2	57.9	57.9	52.7	52.7												
54"			46.7	58.3	46.7	58.0																
59"					42.7	53.4																
(1) LONG DIMENSION	48"		54"		59"		66"		72"		78"		83"		90"		96"		108"		120"	

TABLE NOTES:

(1) ALL WINDOW DIMENSION VALUES SHOWN ARE +/–1/2" & ARE FRAME (F.H. & F.W.) DIMENSIONS

(2) THOSE SIZES WITH LOADS LISTED ARE MAXIMUM ALLOWABLE SIZES AT THAT LOAD. IF NO LOAD IS LISTED FOR A GIVEN SIZE, THAT SIZE EXCEEDS ALLOWABLE AND IS NOT ACCEPTABLE.

GENERAL NOTES

1. THESE WINDOW SYSTEMS HAVE BEEN TESTED, ANALYZED AND APPROVED FOR DESIGN PRESSURES NOT TO EXCEED THOSE SHOWN IN THE "ALLOWABLE DESIGN LOADS" TABLE.
2. BUCKING, OPENINGS & BUCKING FASTENERS MUST BE PROPERLY DESIGNED & INSTALLED TO TRANSFER WIND LOADS TO THE STRUCTURE.
3. ALL HARDWARE & FASTENERS SHALL BE IN ACCORDANCE WITH THESE DRAWINGS & MAY NOT VARY UNLESS SPECIFICALLY MENTIONED ON THE DRAWINGS.
4. THE DETAILS & SPECIFICATIONS SHOWN HEREIN REPRESENT THE PRODUCTS TESTED & PROPOSED FOR WATER, AIR, IMPACT, CYCLIC & UNIFORM STATIC AIR PRESSURE TESTING IN CONFORMANCE WITH FLORIDA BUILDING CODE PROTOCOLS TAS 201, 202 & 203 FOR LARGE MISSILE IMPACT WINDOWS.
5. THESE WINDOW SYSTEMS HAVE BEEN DESIGNED IN ACCORDANCE WITH THE FLORIDA BUILDING CODE (F.B.C.).
6. IMPACT SHUTTERS ARE NOT REQUIRED WITH THESE WINDOWS.
7. ALL ANCHORS SHALL BE INSTALLED AS SPECIFIED ON THESE DRAWINGS. SPECIFIED EMBEDMENT TO BASE MATERIAL SHALL BE BEYOND WALL FINISH OR STUCCO.

FRAME ANCHOR REQUIREMENTS TABLE

OPENING TYPE (SUBSTRATE)	JAMB TO OPENING FASTENER TYPE	MINIMUM EMBEDMENT	MINIMUM EDGE DIST.
2X_ WOOD FRAME OR BUCK	NO. 10 SMS SCREW	1 1/4"	3/4"
CMU/CONCRETE	3/16" CONCR. SCREW	1 1/4"	2"
CONCRETE SCREWS SHALL BE ITW RAMSET/RED HEAD TAPCONS, ELCO TAPCONS, HILTI KWIK–CON II OR POWERS RAWL TAPPER (HARDENED STEEL OR S.S.).			

*SHEAR SCREW ANCHOR NOTE: FRAME MAY BE EITHER DIRECT MOUNTED TO THE OPENING, MOUNTED ONTO A CONTINUOUS SPACER, OR ANCHORED TO A MIN. 2x4 NO. 3 SOUTHERN PINE WOOD BUCK. WHEN ANCHORED TO A 2x4 BUCK, NO. 10 SCREWS SHALL BE USED. WHEN DIRECT MOUNTED OR MOUNTED WITH SPACER, 3/16" CONCRETE SCREW SHALL BE USED. SEE "FRAME ANCHOR REQUIREMENTS TABLE" FOR EMBED REQUIREMENTS. PROPER MATERIAL SHALL BE USED BETWEEN ALL DISIMILAR MATERIALS (BLOCK/CONCRETE & ALUMINUM).

Approved as complying with the Florida Building Code
Date 06/26/03
NOA# 03-0421.10
Miami Dade Product Control Division
By Fluerdine Berman

DRAWN BY: K.P.S.	CHECKED BY: W.W.S.
PLOT: 1=16	DATE: 02/18/03

NO.	REVISION DESCRIPTION	BY	DATE

DRAWING TITLE
CASEMENT ENERGY SASH TRANSOM

MANUFACTURER
WEATHER SHIELD WINDOWS & DOORS
ONE WEATHER SHIELD PLAZA
MEDFORD, WI 54451
715–748–6555

CONSULTANTS
W. W. SCHAEFER ENGINEERING & CONSULTING, P.A.
8895 N. MILITARY TRAIL; SUITE C–204
PALM BEACH GARDENS, FL 33410
PHONE: 561–775–4902 FAX: 561–775–4903

CERTIFICATION
APR 01 2003
WARREN W. SCHAEFER, P.E.
P.E. NO. 44135

DRAWING NO. 1210 REV.

SHEET NO. 1 OF 2

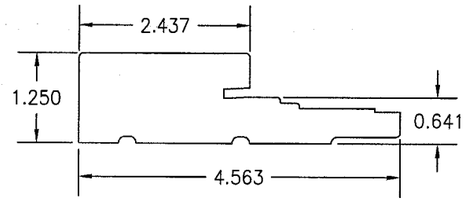

1 HEAD, SILL & SIDE JAMB

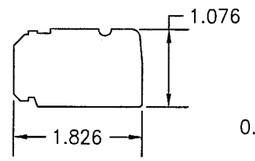

2 SASH

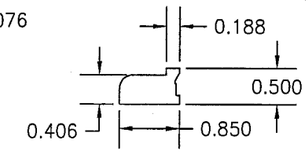

3 GLAZING & SASH STOP

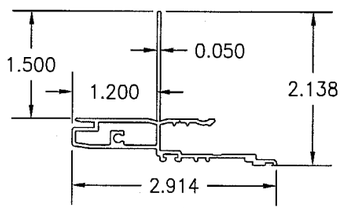

4 FRAME CLADDING

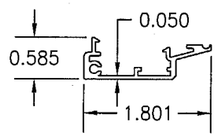

5 SASH CLADDING

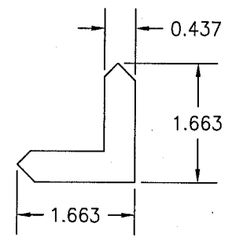

6 SASH CLAD CORNER KEY

ITEM #	DRAWING #	ITEM DESCRIPTION	MANUFACTURER/NOTES
		PARTS	
1	08-0006-C2403	HEAD, SILL & SIDE JAMB	* WOOD
2	08-W2059	SASH	* WOOD
3	08-1492-02	GLAZING & SASH STOP	* WOOD
4	04-0004-C2403	FRAME CLADDING	6063-T5 ALUMINUM
5	04-A2549	SASH CLADDING	6063-T5 ALUMINUM
6	12-0150-M05	SASH CLAD CORNER KEY	6063-T5 ALUMINUM
		SEALS & SEALANTS	
8	12-0050-W2463	SASH, PILE WEATHERSTRIP	AT SIDES & HEAD ONLY
9A	12-1602-02	CASEMENT SEAL	AMESBURY GROUP, INC.
9B	12-0005-P2262	WEATHERSTRIP	INTEK ARLOC
		FASTENERS	
10	–	F16 X 1 1/2" BRAD NAIL	2" FROM ENDS & 12" MAX. O.C.
11	–	NO. 8 X 2 1/2" DRYWALL SCREW	3" FROM ENDS & 16" MAX. O.C.
12	–	3/16" X 1/2' STAPLES	3" FROM ENDS & 20" MAX. O.C.

* WOOD USED WITH TEST UNITS WAS SELECT WESTERN PINE. ALTERNATE WOOD SPECIES TO BE APPLICABLE WITH THESE WINDOWS IS MIN. SELECT MAHOGANY, SOUTHERN PINE, OAK, CHERRY, MAPLE, DOUGLAS FIR & CYPRUS.

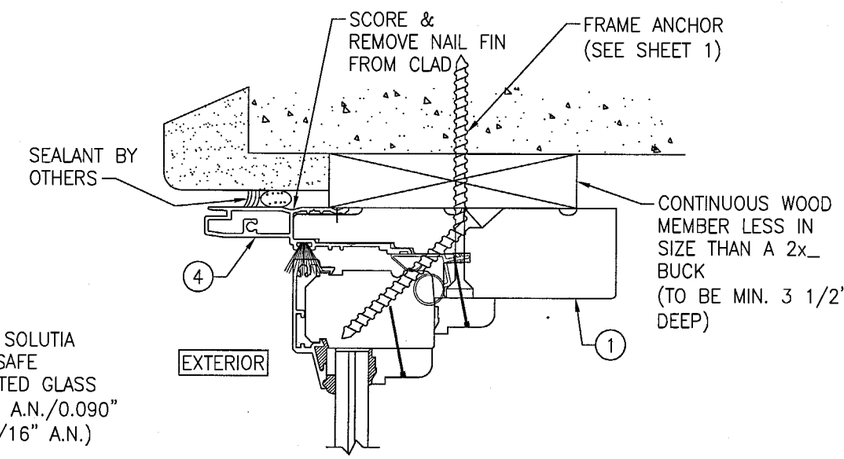

OPTIONAL DIRECT MOUNT DETAIL

FOR DETAIL NOT SHOWN, SEE SECTION "A1" (HEAD SECTION SHOWN, SIDES AND SILL SIMILAR)

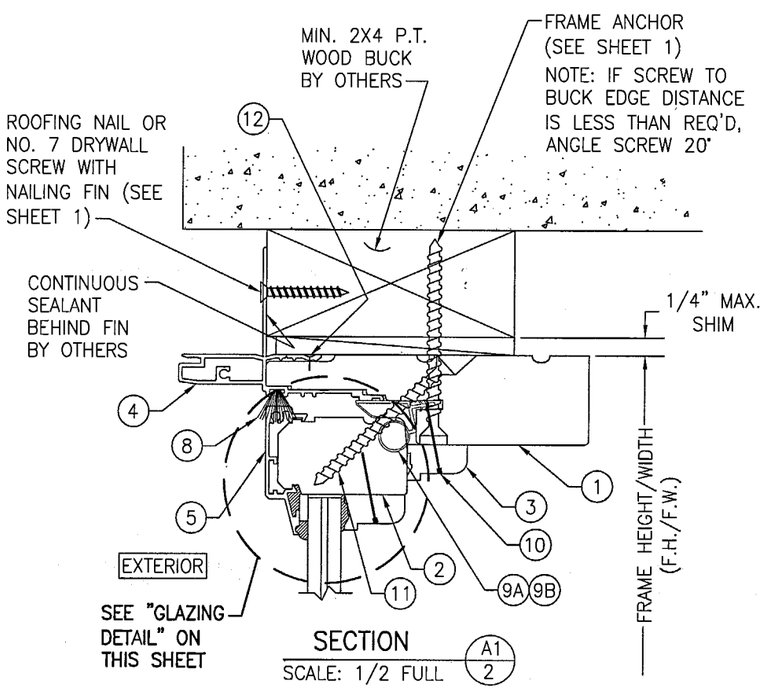

SECTION A1/2

SCALE: 1/2 FULL

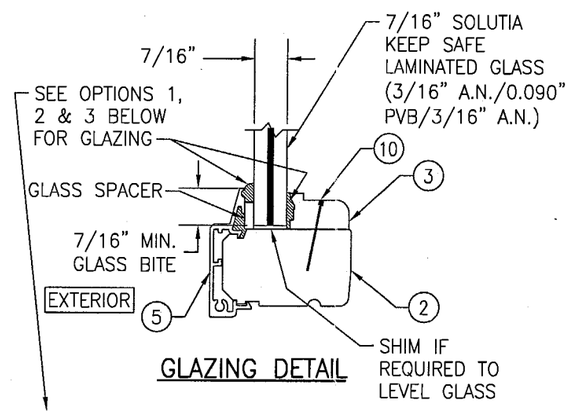

GLAZING DETAIL

GLAZING OPTION 1) NOVA GUARD BC4-121 STRUCTURAL SILICONE @ INTERIOR & NOVA GUARD M418 STRUCTURAL SILICONE @ EXTERIOR

GLAZING OPTION 2) GE SILGLAZE HC STRUCTURAL SILICONE @ INTERIOR & GE ULTRA GLAZE STRUCTURAL SILICONE @ EXTERIOR

GLAZING OPTION 3) DOW CORNING 899 STRUCTURAL SILICONE @ INTERIOR & GE ULTRA GLAZE STRUCTURAL SILICONE @ EXTERIOR

Approved as complying with the Florida Building Code
Date 06/26/03
NOA# 03-0421.10
Miami Dade Product Control Division
By Genevieve Berman

DRAWN BY: K.P.S.	CHECKED BY: W.W.S.
PLOT: 1=2	DATE: 02/18/03

NO.	REVISION DESCRIPTION	BY	DATE

DRAWING TITLE: CASEMENT ENERGY SASH TRANSOM

MANUFACTURER: WEATHER SHIELD WINDOWS & DOORS
ONE WEATHER SHIELD PLAZA
MEDFORD, WI 54451
715-748-6555

CONSULTANTS: W. W. SCHAEFER ENGINEERING & CONSULTING, P.A.
8895 N. MILITARY TRAIL; SUITE C-204
PALM BEACH GARDENS, FL 33410
PHONE: 561-775-4902 FAX: 561-775-4903

CERTIFICATION: APR 01 2003
WARREN W. SCHAEFER, P.E.
P.E. NO. 44135

DRAWING NO. 1210 REV.

SHEET NO. 2 OF 2