MIAMI-DADE

BUILDING CODE COMPLIANCE OFFICE (BCCO)
PRODUCT CONTROL DIVISION

MIAMI-DADE COUNTY, FLORIDA
METRO-DADE FLAGLER BUILDING
140 WEST FLAGLER STREET, SUITE 1603
MIAMI, FLORIDA 33130-1563
(305) 375-2901 FAX (305) 375-2908

NOTICE OF ACCEPTANCE (NOA)

Town & Country Industries, Inc.
400 West McNab Road
Ft. Lauderdale, Florida 33309

SCOPE:
This NOA is being issued under the applicable rules and regulations governing the use of construction materials. The documentation submitted has been reviewed by Miami-Dade County Product Control Division and accepted by the Board of Rules and Appeals (BORA) to be used in Miami Dade County and other areas where allowed by the Authority Having Jurisdiction (AHJ).

This NOA shall not be valid after the expiration date stated below. The Miami-Dade County Product Control Division (In Miami Dade County) and/or the AHJ (in areas other than Miami Dade County) reserve the right to have this product or material tested for quality assurance purposes. If this product or material fails to perform in the accepted manner, the manufacturer will incur the expense of such testing and the AHJ may immediately revoke, modify, or suspend the use of such product or material within their jurisdiction. BORA reserves the right to revoke this acceptance, if it is determined by Miami-Dade County Product Control Division that this product or material fails to meet the requirements of the applicable building code.

This product is approved as described herein, and has been designed to comply with the High Velocity Hurricane Zone of the Florida Building Code.

DESCRIPTION: 0.0615" (min.) Aluminum Storm Panels Shutter

APPROVAL DOCUMENT: Drawing No. 03-260, titled " 0.0615" Aluminum Storm Panel ", sheets 1 through 6 of 6, prepared by Knezevich & Associates, Inc., dated April 04, 2003, last revision #1 dated September 23, 2003 signed and sealed by V.J. Knezevich, P.E. bearing the Miami-Dade County Product Control Revision stamp with the Notice of Acceptance number and expiration date by the Miami-Dade County Product Control Division.

MISSILE IMPACT RATING: Large and Small Missile Impact

LABELING: Each panel shall bear a permanent label with the manufacturer's name or logo, city, state and the following statement: "Miami-Dade County Product Control Approved", unless otherwise noted herein.

RENEWAL of this NOA shall be considered after a renewal application has been filed and there has been no change in the applicable building code negatively affecting the performance of this product.

TERMINATION of this NOA will occur after the expiration date or if there has been a revision or change in the materials, use, and/or manufacture of the product or process. Misuse of this NOA as an endorsement of any product, for sales, advertising or any other purposes shall automatically terminate this NOA. Failure to comply with any section of this NOA shall be cause for termination and removal of NOA.

ADVERTISEMENT: The NOA number preceded by the words Miami-Dade County, Florida, and followed by the expiration date may be displayed in advertising literature. If any portion of the NOA is displayed, then it shall be done in its entirety.

INSPECTION: A copy of this entire NOA shall be provided to the user by the manufacturer or its distributors and shall be available for inspection at the job site at the request of the Building Official.

This NOA **revises NOA # 00-1212.05** & consists of this page 1, evidence submitted page(s) as well as approval document mentioned above.

The submitted documentation was reviewed by **Helmy A. Makar, P.E.**

Helmy A. Makar
10/23/03

PRODUCT CONTROL ACCEPTED

NOA No 03-0421.12
Expiration Date: 07/19/2006
Approval Date: 10/23/2003

Town & Country Industries, Inc.

NOTICE OF ACCEPTANCE: EVIDENCE SUBMITTED

1. EVIDENCE SUBMITTED UNDER PREVIOUS APPROVAL #00-1212.05

A. DRAWINGS

1. *Drawing no. 00-205, titled " 0.0615" Aluminum Storm Pane ", prepared by Knezevich & Associates, Inc., dated December 8, 2000, last revision #1 dated May 24, 2001, sheets 1 through 6 of 6, signed and sealed by V. J. Knezevich, P.E.*

B. TESTS

1. *Test report on Large Missile Impact Test, Uniform Static Air Pressure Test and Cyclic Wind Pressure Test of 0.0615" aluminum storm panels, prepared by Construction Testing Corporation, Report No. CTC-00-038, dated November 7, 2000, signed and sealed by Yamil G. Kuri, P.E.*
2. *Letter from Construction Testing Corporation, for test report No. CTC-00-038, dated June 1, 2001, for the panel thickness, signed and sealed by George Dotzler.*

C. CALCULATIONS

1. *Comparative analysis and Anchor Analysis, dated December 8, 2000, pages 1 through 52, prepared by Knezevich and Associates, Inc., signed and sealed by V. J. Knezevich, P.E.*
2. *Revised Comparative analysis and Anchor Analysis, dated June 20, 2001, pages 1 through 4, prepared by Knezevich and Associates, Inc., signed and sealed by V. J. Knezevich, P.E.*

D. MATERIAL CERTIFICATIONS

1. *Mill Certified Inspection Report of coils, not dated, for Aluminum Alloy 3004-H34 by Jupiter Aluminum Corp., with chemical composition and physical properties.*
2. *Tensile Test Report from Certified Testing Laboratories, Test Report # CTL – 799F dated August 28, 2000, for Aluminum sample #00-038, tested per ASTM E8-93, signed and sealed by Ramesh Patel, P.E.*

2. NEW EVIDENCE SUBMITTED

A. DRAWINGS

1. *Drawing No. 03-260, titled " 0.0615" Aluminum Storm Panel ", sheets 1 through 6 of 6, prepared by Knezevich & Associates, Inc., dated April 04, 2003, last revision #1 dated September 23, 2003 signed and sealed by V.J. Knezevich, P.E.*

B. TESTS

1. *None.*

Helmy A. Makar, P. E.
Product Control Examiner
NOA No 03-0421.12
Expiration Date: 07/19/2006
Approval Date: 10/23/2003

C. CALCULATIONS

1. None.

D. QUALITY ASSOURANCE

1. By Miami-Dade County Building Code Compliance Office.

E. MATERIAL CERTIFICATIONS

1. None.

Helmy A. Makar, P. E.
Product Control Examiner
NOA No 03-0421.12
Expiration Date: 07/19/2006
Approval Date: 10/23/2003

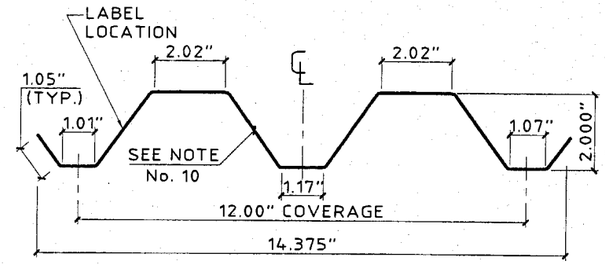

1 STORM PANEL
SCALE : 3" = 1'-0"

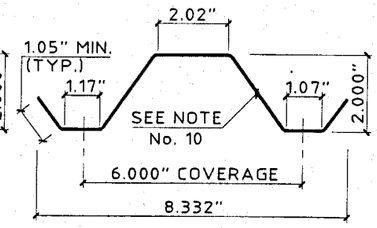

1a HALF STORM PANEL
SCALE : 3" = 1'-0"

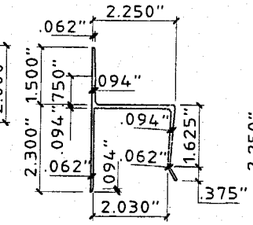

2 "h" HEADER
SCALE : 3" = 1'-0"

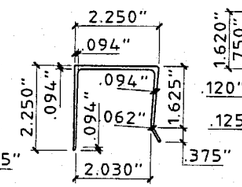

3 "U" HEADER
SCALE : 3" = 1'-0"

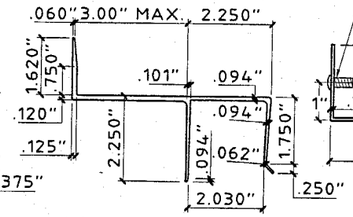

3a BUILD-OUT "U" HEADER
SCALE : 3" = 1'-0"

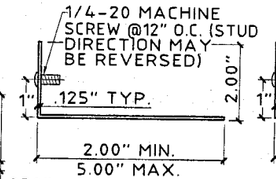

4 STUD ANGLE
SCALE : 3" = 1'-0"

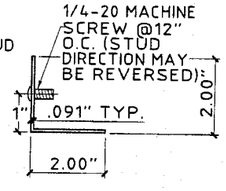

4a STUD ANGLE
SCALE : 3" = 1'-0"

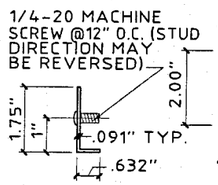

4b STUD ANGLE
SCALE : 3" = 1'-0"

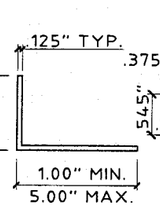

5 ANGLE
SCALE : 3" = 1'-0"

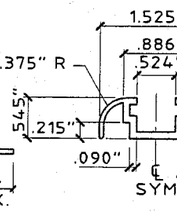

6 C-TRACK (FINISH)
SCALE : HALF SIZE

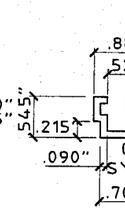

6a C-TRACK
SCALE : HALF SIZE

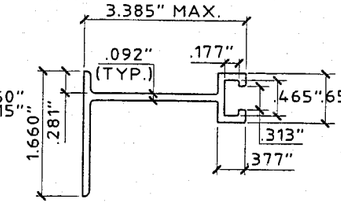

7 BUILD-OUT F-TRACK
SCALE : HALF SIZE

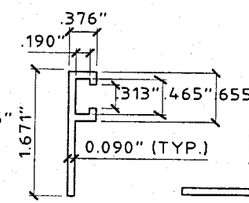

8 "F" TRACK
SCALE : HALF SIZE

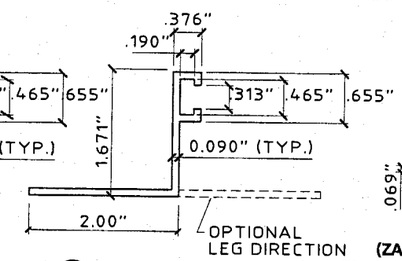

8a "F" ANGLE - TRACK
SCALE : HALF SIZE

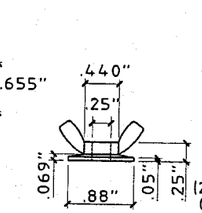

9 (ZAMAC 3 ALLOY) WING NUT
SCALE : HALF SIZE

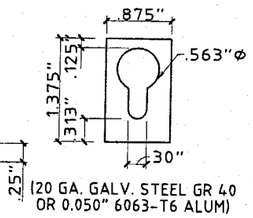

10 KEYHOLE WASHER
SCALE : HALF SIZE

GENERAL NOTES:

1. THESE APPROVAL DOCUMENTS REPRESENT A SHUTTER SYSTEM ANALYZED WITH THE PROVISION SET FOR THE ISSUANCE OF A NOTICE OF ACCEPTANCE (NOA) BY MIAMI-DADE COUNTY PRODUCT CONTROL DIVISION FOR THE HIGH VELOCITY HURRICANE ZONE (HVHZ) OF THE FLORIDA BUILDING CODE.
2. TO VERIFY THAT THE ANCHORS AS TESTED, ARE NOT OVERSTRESSED IN THESE APPROVAL DOCUMENTS, A 33% INCREASE IN ALLOWABLE STRESS WAS USED IN THE FASTENER ANALYSIS.
3. DETERMINE THE POSITIVE AND NEGATIVE DESIGN LOADS TO USE WHEN REFERENCING THESE DOCUMENTS IN ACCORDANCE WITH THE GOVERNING CODE AND GOVERNING WIND VELOCITY.
4. THESE APPROVAL DOCUMENTS ARE GENERIC AND DO NOT INCLUDE INFORMATION FOR SITE-SPECIFIC APPLICATION OF THIS SHUTTER SYSTEM.
5. THESE APPROVAL DOCUMENTS COMPLY WITH CHAPTER 61G15-23 OF THE FLORIDA ADMINISTRATIVE CODE.
6. THESE APPROVAL DOCUMENTS, ARE SUITABLE TO BE APPLIED BY THE CONTRACTOR PROVIDED THE CONTRACTOR DOES NOT DEVIATE FROM THE CONDITIONS DETAILED HEREIN AND THE CONTRACTOR VERIFIES THAT THE EXISTING STRUCTURE DOES NOT DEVIATE IN EITHER FORM OR MATERIAL FROM THE STRUCTURAL SUBSTRATES DETAILED HEREIN.
7. ANY MODIFICATIONS OR ADDITIONS TO THESE APPROVAL DOCUMENTS WILL VOID THE APPROVAL DOCUMENTS.
8. WHEN THE SITE CONDITIONS DEVIATE FROM THESE APPROVAL DOCUMENTS, THE BUILDING OFFICIAL MAY ELECT ONE OF THE FOLLOWING OPTIONS:
   A) REQUIRE THAT SITE SPECIFIC DOCUMENTS BE PREPARED, SIGNED, DATED AND SEALED BY A LICENSED ENGINEER OR REGISTERED ARCHITECT, WHICH DETAIL AND JUSTIFY THE DEVIATION. SAID DOCUMENTS SHALL BE SUBMITTED TO THE PRODUCT ENGINEER FOR REVIEW AS A CONDITION TO THE BUILDING OFFICIAL GRANTING HIS/HER APPROVAL.
   B) REQUIRE THAT A ONE-TIME SITE SPECIFIC APPROVAL BE APPLIED FOR AND SECURED FROM THE MIAMI-DADE COUNTY PRODUCT CONTROL DIVISION

   WHEN THE SITE CONDITION DEVIATIONS OCCUR WITHIN THE HIGH VELOCITY HURRICANE ZONE AREAS ONLY OPTION "B" SHALL BE ACCEPTED BY THE BUILDING OFFICIAL.
9. PRODUCT MARKINGS SHALL BE WITHIN 12" OF ONE END OF THE PANEL WITH A MINIMUM OF ONE MARKING PER PANEL AND SHALL BE PERMANENTLY LABELED AS FOLLOWS:
   TOWN & COUNTRY INDUSTRIES, INC.
   FT. LAUDERDALE, FL.
   MIAMI-DADE COUNTY PRODUCT APPROVED
10. STORM PANELS SHALL BE 3004-H34 OR 5052-H34 ALUMINUM ALLOY, WITH THE FOLLOWING MINIMUM THICKNESS AND MECHANICAL PROPERTIES: NOMINAL 0.0615"
11. ALL EXTRUSIONS SHALL BE 6063-T6 ALUMINUM ALLOY, U.O.N
12. ALL BOLTS AND WASHERS SHALL BE GALVANIZED OR STAINLESS STEEL WITH A MINIMUM TENSILE STRENGTH OF 60 K.S.I., U.O.N.
13. TOP & BOTTOM DETAILS SHOWN MAY BE INTERCHANGED AS FIELD CONDITIONS DICTATE. PANELS MAY BE MOUNTED HORIZONTALLY WHERE APPLICABLE, EXCEPT FOR "h" AND "U" HEADER MOUNTING CONDITIONS.

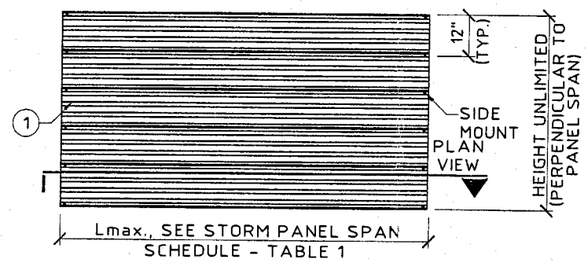

TYPICAL HORIZONTAL ELEVATION
SCALE: 1/4" = 1' - 0"

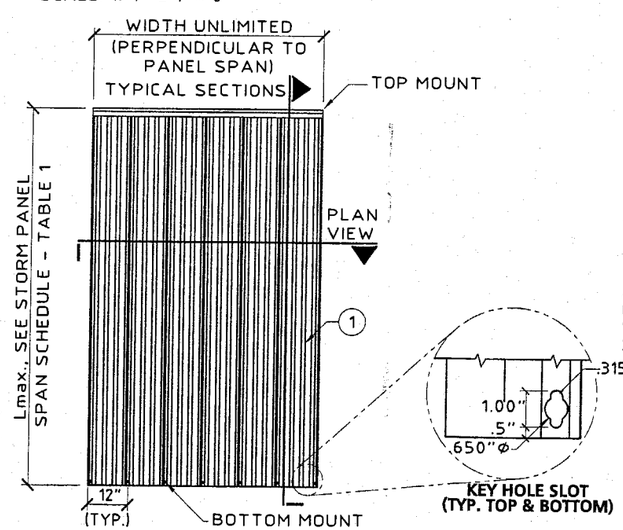

TYPICAL VERTICAL ELEVATION
SCALE: 1/4" = 1' - 0"

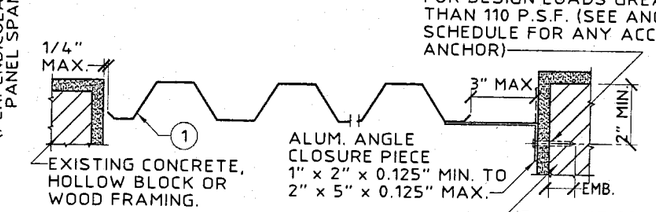

TRAP MOUNT CLOSURE DETAIL

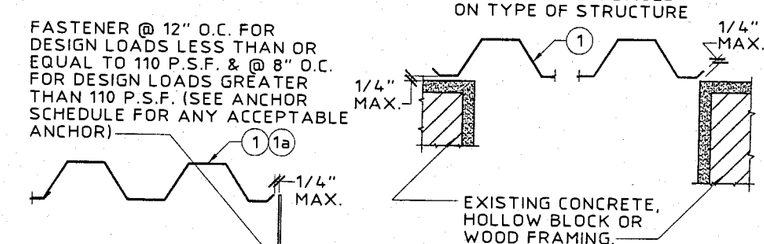

BUILD-OUT MOUNT CLOSURE DETAIL

WALL MOUNT CLOSURE DETAIL

TYPICAL CLOSURE DETAILS (PLAN)
SCALE: 1-1/2" = 1'-0"

PRODUCT REVISED
as complying with the Florida Buiding Code
Acceptance No 03-0421.12
Expiration Date 07/19/2006
By Helena A. Molina
Miami Dade Product Control Division

KNEZEVICH & ASSOCIATES, INC.
CONSULTING ENGINEERS • PRODUCT TESTING
1260 N. UNIVERSITY DRIVE, SUITE 180 • FORT LAUDERDALE, FL 33322
TEL: (954) 382-2800 • FAX: (954) 382-2989 • FLORIDA COA #3205
WEBSITE: WWW.KNEZEVICH.COM • E-MAIL: KA@KNEZEVICH.COM

COPYRIGHT © 2003 KNEZEVICH & ASSOCIATES, INC

0.0615" ALUMINUM STORM PANEL

Town & Country INDUSTRIES, INC.
400 WEST McNAB ROAD • (800) 432-5019
FT. LAUDERDALE, FL 33309

V.J. KNEZEVICH
PROFESSIONAL ENGINEER
FL License No. PE 0010983

SEP 23 2003

revisions			
no	date	by	description
0	04/04/03	OLB	PREV. DWG. No. 00-20
1	09/23/03	OLB	COUNTY COMM. (GEN. NOTES)

date 04/04/2003
scale AS NOTED | drawn by MCR
design by VJK | checked by VJK
drawing no. 03-260
sheet 1 of 6

Print Information: \\hurricane\ka\CADD\Cadd03\TnC\03-260\R1-sub\03-360-01.dwg MCantu 09/23/2003 04:25:51pm 09/23/03 16:16

Print Information: \\hurricane\ka\CADD\Cadd03\TnC\03-260\R1-sub\03-360-02.dwg MCantu 09/23/2003 04:26:11pm 09/23/03 16:18

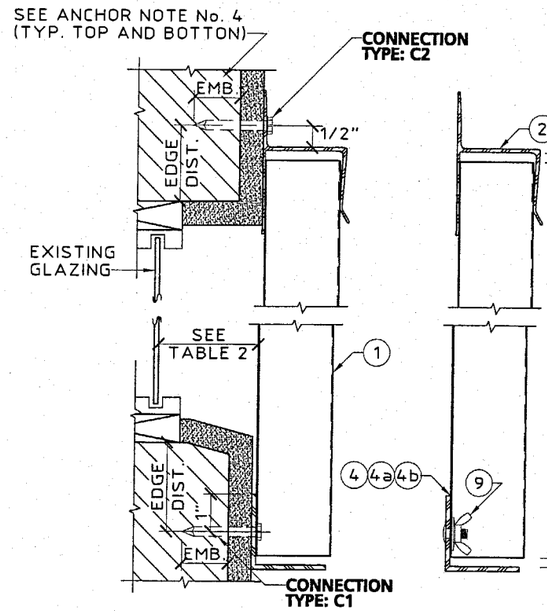

(A) WALL MOUNT SECTION
SCALE: 3" = 1' - 0"

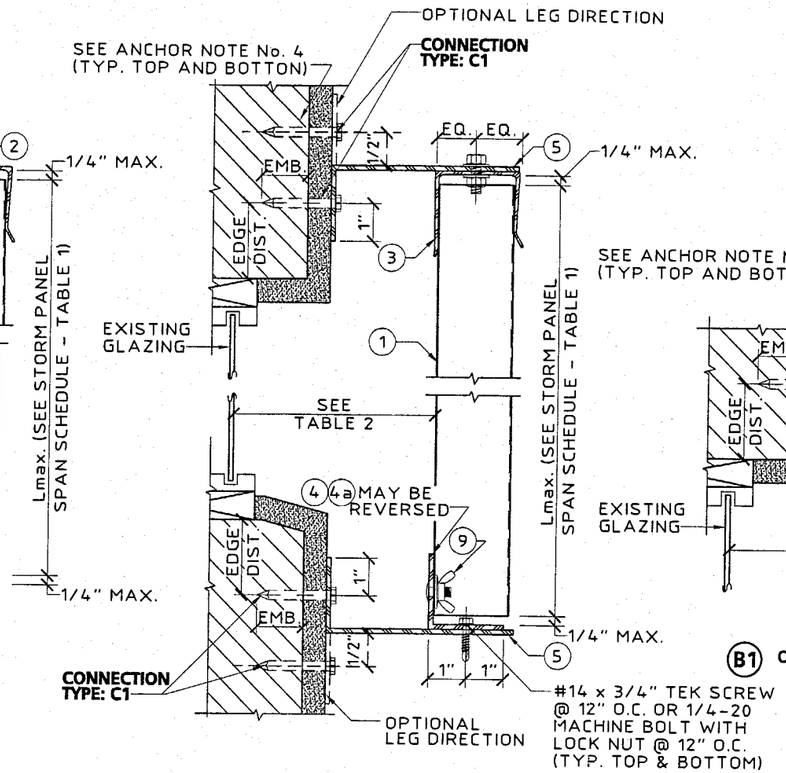

(B) BUILD-OUT MOUNT SECTION
SCALE: 3" = 1' - 0"

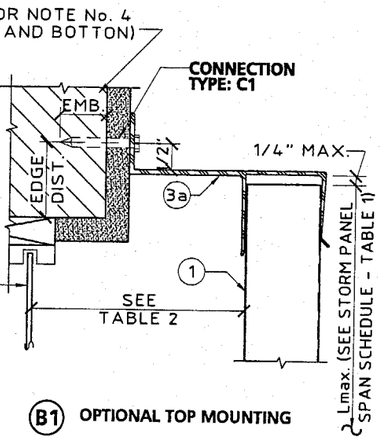

(B1) OPTIONAL TOP MOUNTING

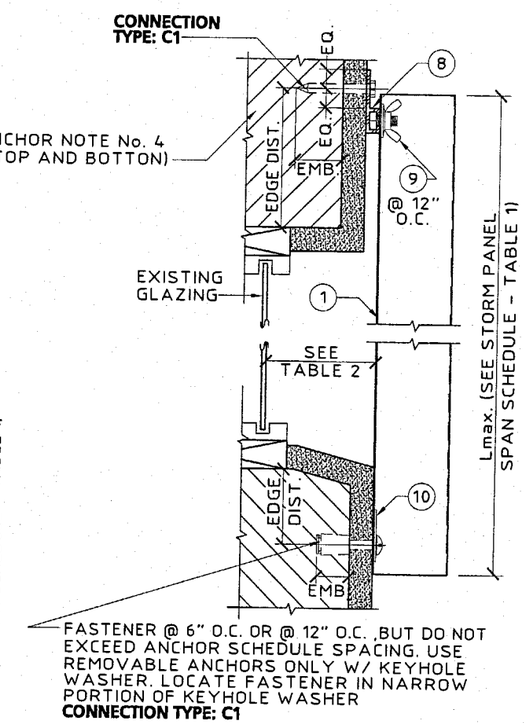

(C) "F" TRACK/DIRECT MOUNT SECTION
SCALE: 3" = 1' - 0"

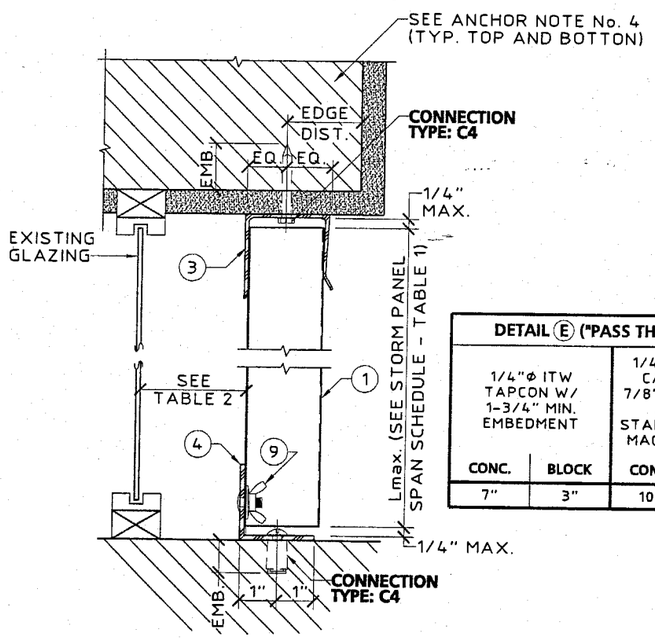

(D) CEILING/FLOOR MOUNT SECTION
SCALE: 3" = 1' - 0"

DETAIL (E) ("PASS THRU" SEC.) ANCHOR SCHEDULE				
1/4"Φ ITW TAPCON W/ 1-3/4" MIN. EMBEDMENT		1/4"Φ POWERS CALK-IN W/ 7/8" EMBEDMENT & 1/4-20 STAINLESS STEEL MACHINE SCREW		1/4"Φ WOOD x MIN. 2-1/2" LONG LAG SCREW W/ MINIMUM 1-3/4" EMBEDMENT SHEAR PARALLEL OR PERPENDICULAR TO WOOD GRAIN WOOD
CONC.	BLOCK	CONC.	BLOCK	
7"	3"	10"	4"	12"

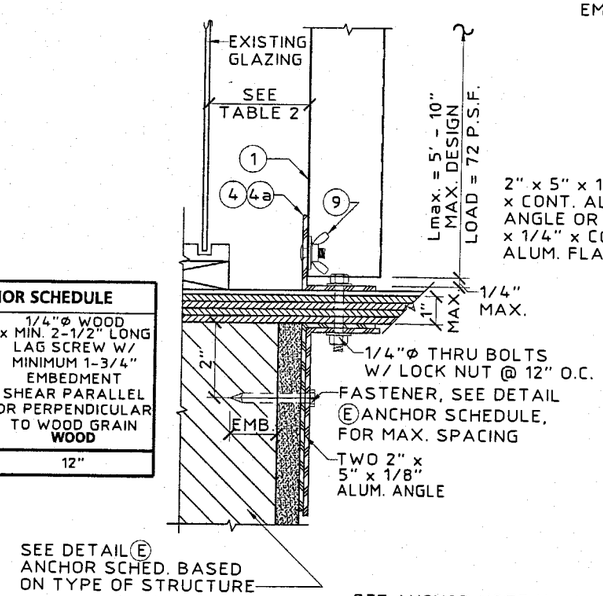

(E) "PASS THRU" SECTION
SCALE: 3" = 1' - 0"

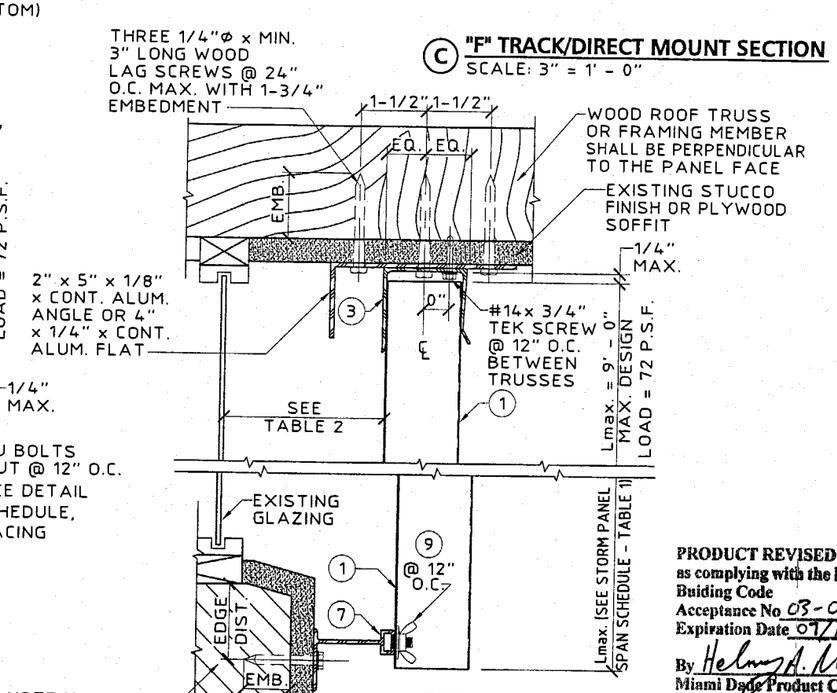

(F) CEILING MOUNT / BUILD OUT SECTION
SCALE: 3" = 1' - 0"

PRODUCT REVISED
as complying with the Florida Buiding Code
Acceptance No 03-0421.12
Expiration Date 07/19/2006
By Helmy A. Malak
Miami Dade Product Control Division

KNEZEVICH & ASSOCIATES, INC.
CONSULTING ENGINEERS • PRODUCT TESTING
1260 N. UNIVERSITY DRIVE, SUITE 180 • FORT LAUDERDALE, FL 33322
TEL: (954) 382-2800 • FAX: (954) 382-2989 • FLORIDA COA #3205
WEBSITE: WWW.KNEZEVICH.COM • E-MAIL: KA@KNEZEVICH.COM
COPYRIGHT © 2003 KNEZEVICH & ASSOCIATES, INC

0.061" ALUMINUM STORM PANEL

Sun & Country INDUSTRIES, INC.
400 WEST McNAB ROAD • (800) 432-5019
FT. LAUDERDALE, FL 33309

V.J. KNEZEVICH
PROFESSIONAL ENGINEER
FL License No: PE-0070983
SEP 23 2003

revisions			
no	date	by	description
0	06/06/03	OLB	PREV. DWG. No. 00-205
1	09/23/03	OLB	COUNTY COMM. (GEN. NOTES)

date 04/04/2003
scale AS NOTED | drawn by MCR
design by VJK | checked by VJK
drawing no. 03-260
sheet 2 of 6

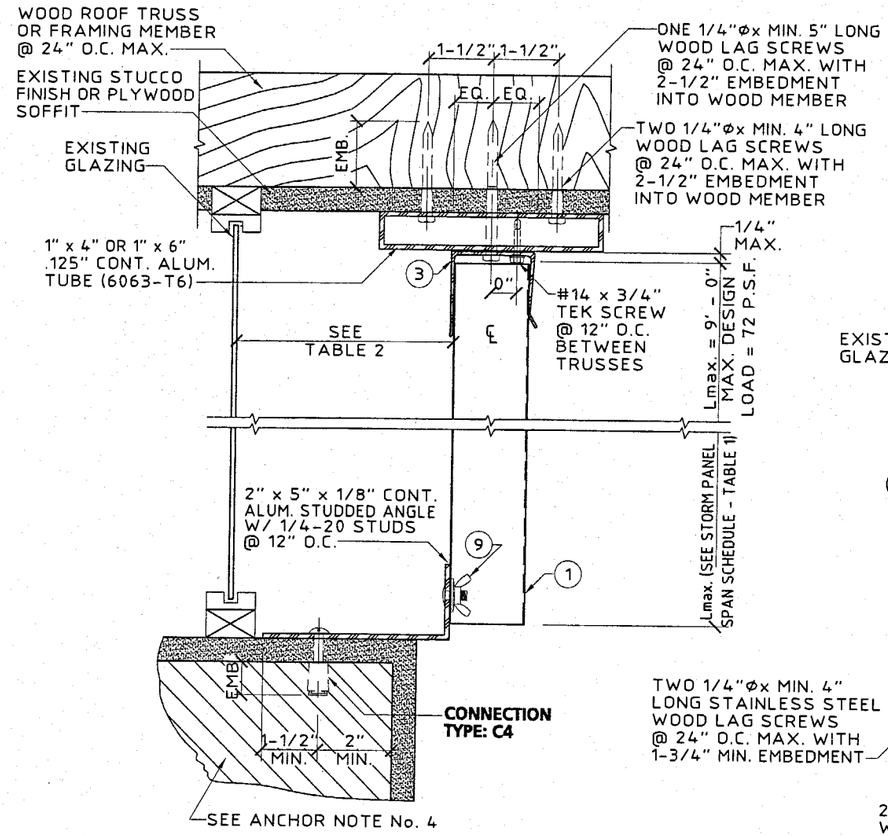

(G) BUILD-DOWN / BUILD-OUT SECTION
SCALE: 3" = 1' - 0"

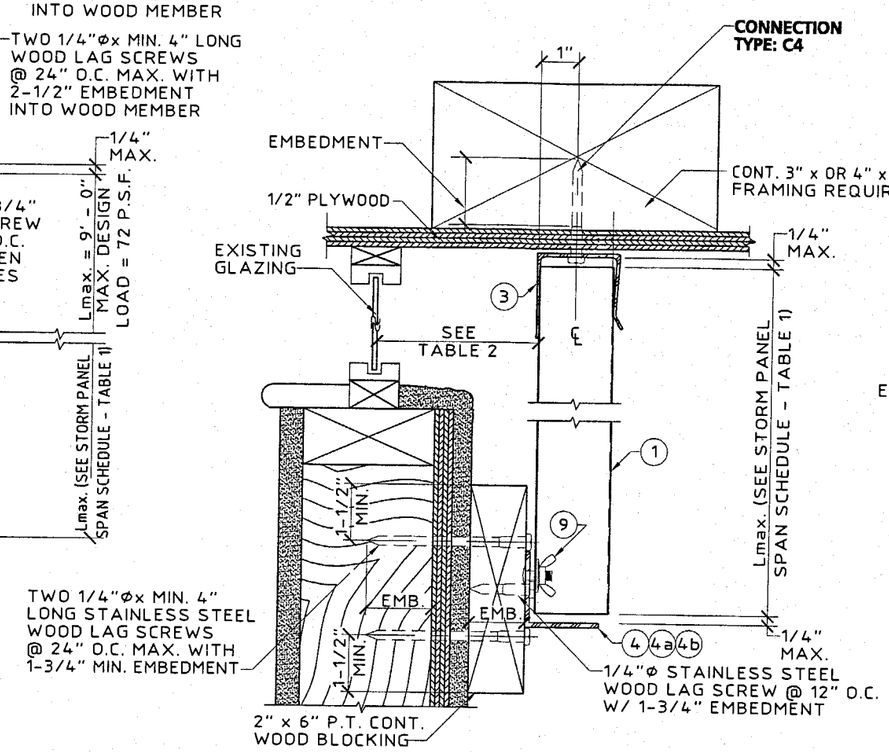

(H) CEILING/BUILD-OUT MOUNT SECTION
SCALE: 3" = 1' - 0"

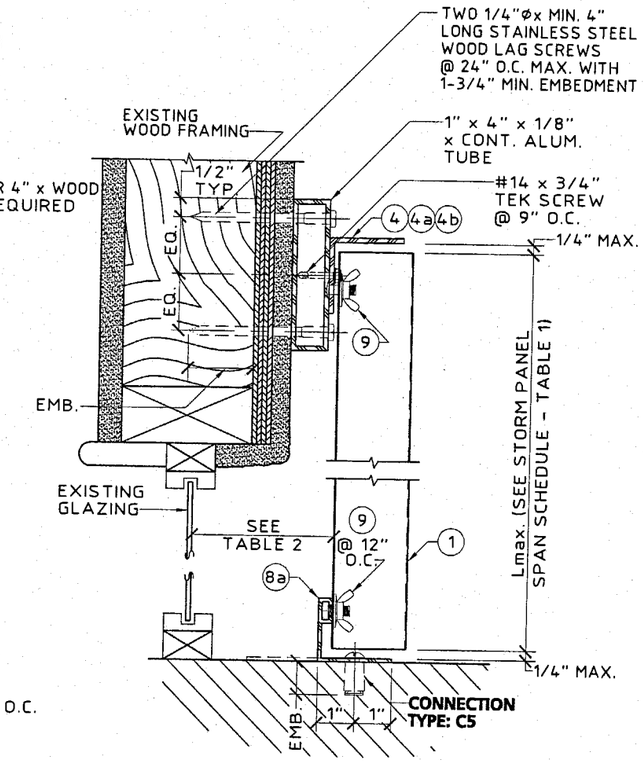

(J) BUILD-OUT/FLOOR MOUNT SECTION
SCALE: 3" = 1' - 0"

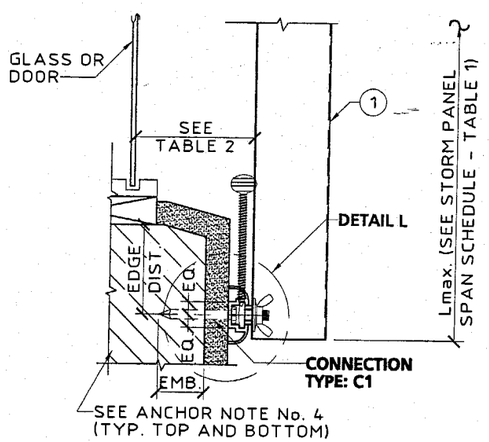

NOTE: USE OF DETAIL SHALL BE IN CONJUNCTION WITH AN " h " HEADER OR " U " HEADER TOP MOUNT

(K) C-TRACK ASSEMBLY - INSIDE MOUNT
SCALE: 3" = 1' - 0"

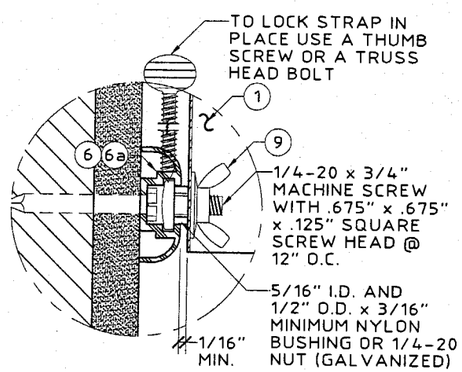

(L) C-TRACK ASSEMBLY - (BLOW UP)
SCALE: HALF SIZE

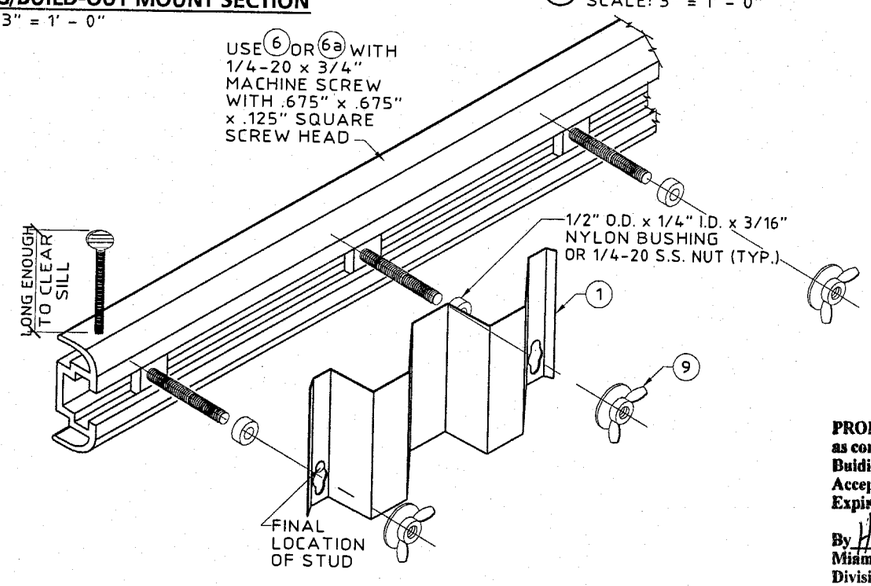

(M) C-TRACK ASSEMBLY (ISOMETRIC VIEW)
N.T.S.

PRODUCT REVISED
as complying with the Florida Building Code
Acceptance No 03-0421.12
Expiration Date 07/19/2006
By Helmy A. Mola
Miami Dade Product Control Division

KNEZEVICH & ASSOCIATES, INC.
CONSULTING ENGINEERS • PRODUCT TESTING
1260 N. UNIVERSITY DRIVE, SUITE 180 • FORT LAUDERDALE, FL 33322
TEL: (954) 382-2800 • FAX: (954) 382-2989 • FLORIDA COA #3205
WEBSITE: WWW.KNEZEVICH.COM • E-MAIL: KA@KNEZEVICH.COM
COPYRIGHT © 2003 KNEZEVICH & ASSOCIATES, INC

0-0615"
ALUMINUM STORM PANEL

Town & Country INDUSTRIES, INC.
400 WEST McNAB ROAD • (800) 432-5019
FT. LAUDERDALE, FL 33309

V.J. KNEZEVICH
PROFESSIONAL ENGINEER
FL License No: PE 0010983
SEP 23 2003

revisions			
no	date	by	description
0	04/04/03	DLB	PREV. DWG. No. 00-205
1	09/23/03	DLB	COUNTY COMM. (GEN. NOTES)

date 04/04/2003
scale AS NOTED | drawn by MCR
design by VJK | checked by VJK
drawing no. 03-260
sheet 3 of 6

Print Information: \\hurricane\ka\CADD\Cadd03\TnC\03-260\R1-sub\03-360-03.dwg MCantu 09/23/2003 04:26:25pm 09/23/03 16:19

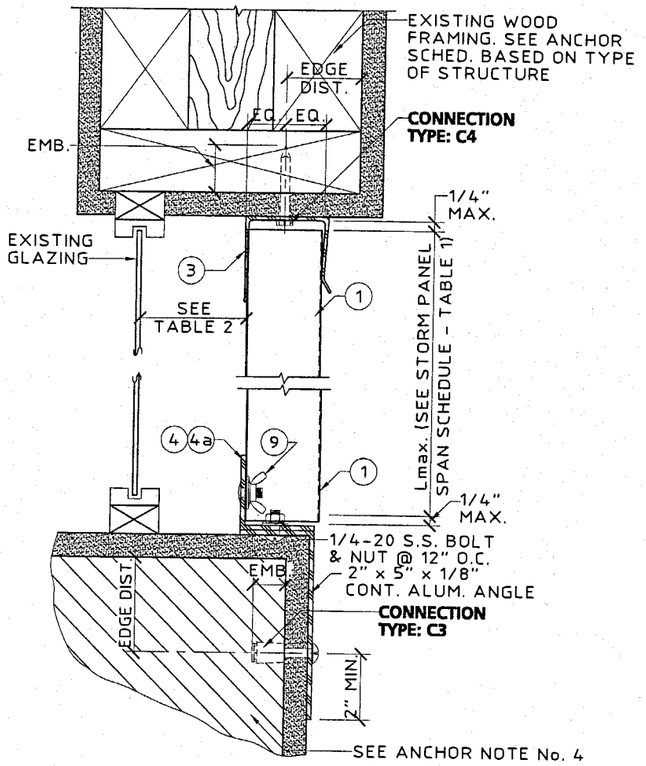

(N) WOOD CEILING/ INSIDE MOUNT SECTION

SCALE: 3" = 1'-0"

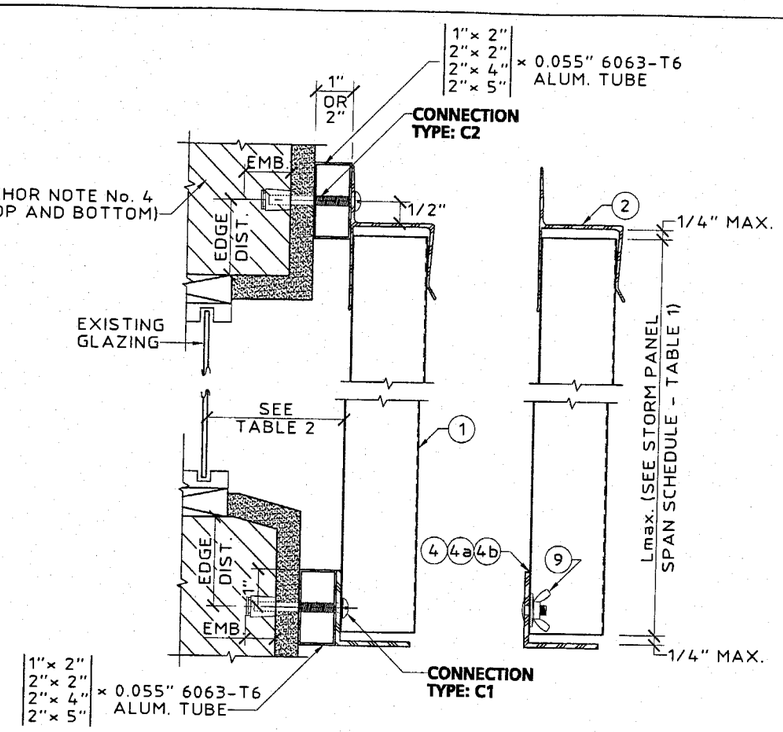

(P) WALL MOUNT SECTION

SCALE: 3" = 1' - 0"

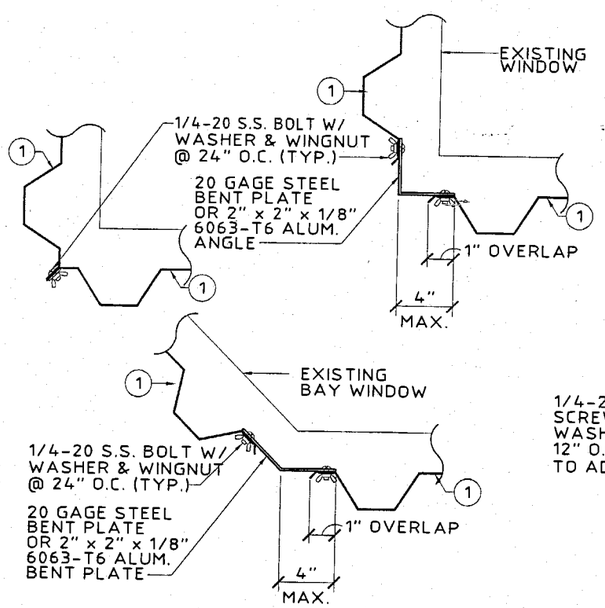

(R) TYPICAL CORNER CLOSURE DETAILS (PLAN)

SCALE: 1-1/2" = 1'-0"

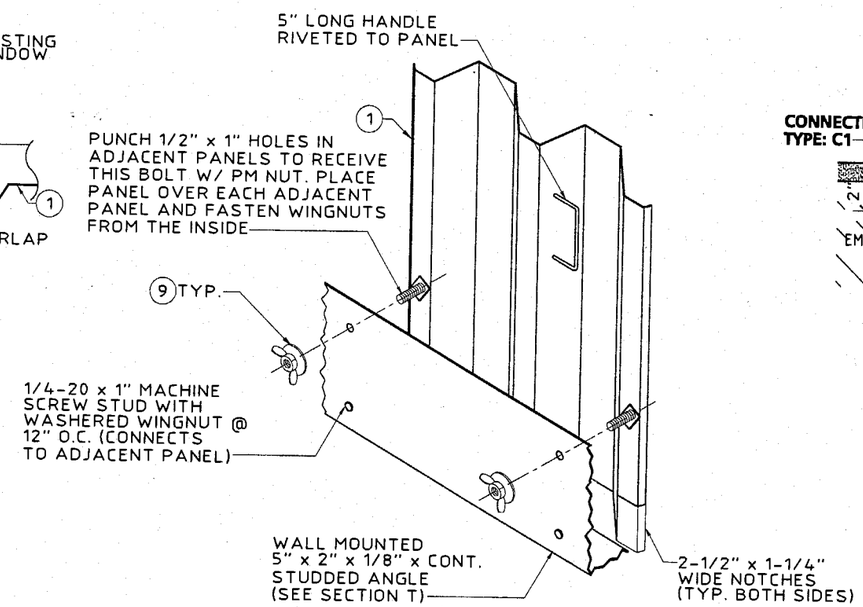

(S) OPTIONAL INTERIOR FASTENING DETAIL (ISOMETRIC)

N.T.S.

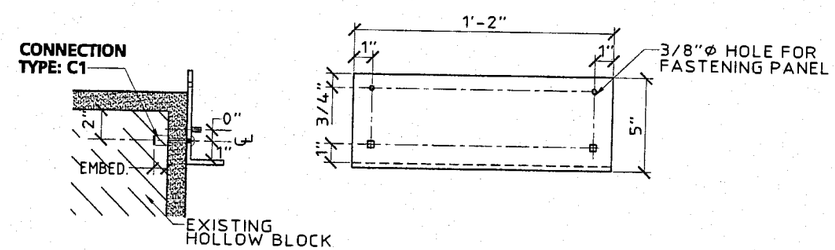

(MAX. PANEL HEIGHT = 7' - 4" & MAX. DESIGN LOAD ñ 72.00 P.S.F.)

(T) INTERIOR FASTENING ANGLE ASSEMBLY

SCALE: 1-1/2" = 1'-0"

DETAILS (S) & (T) NOTE:

THESE DETAILS DEPICT THE CONNECTION OF THE LAST PANEL FOR AN OPENING WITH PANELS INSTALLED FROM INSIDE. USE OF THESE DETAILS SHALL BE IN CONJUNCTION WITH AN "h" HEADER OR "U" HEADER TOP MOUNT.

PRODUCT REVISED
as complying with the Florida Building Code
Acceptance No. 03-0421.12
Expiration Date 07/19/2006
By Helena A. Molina
Miami Dade Product Control Division

KNEZEVICH & ASSOCIATES, INC.
CONSULTING ENGINEERS • PRODUCT TESTING
1260 N. UNIVERSITY DRIVE, SUITE 180 • FORT LAUDERDALE, FL 33322
TEL: (954) 382-2800 • FAX: (954) 382-2989 • FLORIDA COA #3205
WEBSITE: WWW.KNEZEVICH.COM • E-MAIL: KA@KNEZEVICH.COM

COPYRIGHT © 2003 KNEZEVICH & ASSOCIATES, INC.

0-061 5"
ALUMINUM STORM PANEL

Town & Country
INDUSTRIES, INC.
400 WEST McNAB ROAD • (800) 432-5019
FT. LAUDERDALE, FL 33309

V.J. KNEZEVICH
PROFESSIONAL ENGINEER
FL License No: PE 0010983

SEP 23 2003

revisions			
no	date	by	description
0	04/04/03	OLB	PREV. DWG. No. 00-205
1	09/23/03	OLB	COUNTY COMM. (GEN. NOTE)

date 04/04/2003
scale AS NOTED
drawn by MCR
design by VJK
checked by VJK
drawing no. 03-260
sheet 4 of 6

Print Information: \\hurricane\ka\CADD\Cadd03\TnC\03-260\R1-sub\03-360-04.dwg MCantu 09/23/2003 04:26:37pm 09/23/03 16:21

ANCHOR SCHEDULE

FASTENER MAXIMUM SPACING (INCHES) REQUIRED FOR VARIOUS DESIGN LOADS AND SPANS

EXISTING STRUCTURE	ANCHOR TYPE	LOAD (W) P.S.F. MAX. (SEE NOTE 1)	MIN. 2" EDGE DISTANCE															MIN. 3" EDGE DISTANCE														
			SPANS UP TO 6' - 0" (SEE NOTE 1)					SPANS UP TO 8' - 8" (SEE NOTE 1)					SPANS UP TO 12' - 0" (SEE NOTE 1)					SPANS UP TO 6' - 0" (SEE NOTE 1)					SPANS UP TO 8' - 8" (SEE NOTE 1)					SPANS UP TO 12' - 0" (SEE NOTE 1)				
			CONNECTION TYPE (SEE NOTE 3)					CONNECTION TYPE (SEE NOTE 3)					CONNECTION TYPE (SEE NOTE 3)					CONNECTION TYPE (SEE NOTE 3)					CONNECTION TYPE (SEE NOTE 3)					CONNECTION TYPE (SEE NOTE 3)				
			C1	C2	C3	C4	C5	C1	C2	C3	C4	C5	C1	C2	C3	C4	C5	C1	C2	C3	C4	C5	C1	C2	C3	C4	C5	C1	C2	C3	C4	C5
CONCRETE	1/4"Ø ITW OR ELCO TAPCON W/ 1-3/4" MIN. EMBEDMENT (MIN. 3,000 P.S.I. CONCRETE)	40.0	14	14	14	14	14	14	14	14	14	14	14	14	14	12	10	14	14	14	14	14	14	14	14	14	14	14	14	14	14	12
		52.0	14	14	14	14	14	14	14	14	13	11	14	14	10	9	8	14	14	14	14	14	14	14	14	14	12	14	14	11	10	9
		62.0	14	14	14	14	13	14	14	14	10	9	14	10	7	7	6	14	14	14	14	14	14	14	14	12	10	14	11	8	9	7
		78.0	14	14	14	12	10	14	14	8	8	7	14	9	6	7	6	14	14	14	14	12	14	14	9	10	8	14	10	7	8	7
		100.0	14	14	11	9	8	14	9	6	7	6	14	9	6	7	6	14	14	12	11	9	14	10	7	8	7	14	10	7	8	7
	* 1/4"Ø POWERS CALK-IN W/ 7/8" EMBEDMENT & 1/4-20 STAINLESS STEEL MACHINE SCREW (MIN. 3,000 P.S.I. CONCRETE)	40.0	14	14	14	14	14	14	14	14	13	11	14	14	14	9	8	14	14	14	14	14	14	14	14	14	14	14	14	14	14	13
		52.0	14	14	14	14	13	14	14	14	10	9	14	14	11	7	6	14	14	14	14	14	14	14	14	14	14	14	14	14	12	10
		62.0	14	14	14	12	11	14	14	14	8	7	14	11	8	6	5	14	14	14	14	14	14	14	14	14	12	14	14	10	10	8
		78.0	14	14	14	9	8	14	14	9	6	6	14	10	7	5	5	14	14	14	14	14	14	14	12	11	9	14	12	9	9	8
		100.0	14	14	12	7	6	14	10	7	5	5	14	10	7	5	5	14	14	14	12	11	14	12	9	9	8	14	12	9	9	8
	* * 1/4"Ø ELCO MALE/ FEMALE "PANELMATE" W/ 1-3/4 MIN. EMBEDMENT & 1/4-20 MACHINE SCREW WITH NUT (MIN. 3,323 P.S.I. CONCRETE)	40.0	12	12	12	12	12	12	12	12	12	12	12	12	11	9	9	12	12	12	12	12	12	12	12	12	12	12	12	12	12	12
		52.0	12	12	12	12	12	12	12	12	12	10	12	12	8	9	7	12	12	12	12	12	12	12	12	12	12	12	12	10	11	9
		62.0	12	12	12	12	12	12	12	11	10	8	12	8	5	7	6	12	12	12	12	12	12	12	12	12	11	12	10	7	9	7
		78.0	12	12	12	12	10	12	11	6	8	7	12	7	5	7	6	12	12	12	12	12	12	12	8	10	8	12	9	6	9	7
		100.0	12	12	8	9	7	12	7	5	7	6	12	7	5	7	6	12	12	10	11	9	12	9	6	9	7	12	9	6	9	7
	1/4"Ø ELCO CRETE FLEX OR CRETE MAX W/ 1-3/4" MIN. EMBEDMENT (MIN. 3,300 P.S.I. CONCRETE)	40.0	14	14	14	14	14	14	14	14	14	14	14	14	14	14	14	14	14	14	14	14	14	14	14	14	14	14	14	14	14	14
		52.0	14	14	14	14	14	14	14	14	14	14	14	14	13	13	11	14	14	14	14	14	14	14	14	14	14	14	14	14	14	13
		62.0	14	14	14	14	14	14	14	14	14	12	14	14	9	10	9	14	14	14	14	14	14	14	14	14	14	14	14	12	13	11
		78.0	14	14	14	14	14	14	14	11	12	10	14	12	8	10	8	14	14	14	14	14	14	14	14	14	12	14	14	11	12	11
		100.0	14	14	14	13	11	14	12	8	10	8	14	12	8	10	8	14	14	14	14	14	14	14	11	12	11	14	14	11	12	11
HOLLOW CONCRETE BLOCK	1/4"Ø ITW OR ELCO HEX-FLANGE TAPCON W/ 1-1/4" EMBEDMENT	40.0	14	14	14	11	9	13	13	13	7	6	9	9	7	5	4	14	14	14	12	10	14	14	14	8	7	10	10	7	6	5
		52.0	14	14	14	8	7	10	10	8	6	4	7	7	3	4	3	14	14	14	9	8	10	10	9	6	5	7	7	4	4	4
		62.0	12	12	12	7	6	8	8	5	5	4	6	4		3	3	13	13	13	8	6	9	9	5	5	4	6	4		4	3
		78.0	9	9	7	5	4	6	5	3	4	3	5	3		3		10	10	8	6	5	7	6	3	4	3	6	3		3	3
		100.0	7	7	4	4	3	5	3		3		5	3		3		8	8	4	5	4	6	3		3	3	6	3		3	3
	* 1/4"Ø POWERS CALK-IN W/ 7/8" EMBEDMENT & 1/4-20 STAINLESS STEEL MACHINE SCREW	40.0	14	14	14	11	9	14	14	14	7	6	11	11	9	5	4	14	14	14	14	14	14	14	14	12	10	14	14	11	8	7
		52.0	14	14	14	8	7	12	12	11	6	5	9	9	4	4	3	14	14	14	13	11	14	14	13	9	7	11	11	5	6	5
		62.0	14	14	14	7	6	10	10	6	5	4	7	4	3	3	3	14	14	14	11	9	13	13	8	7	6	9	6	4	5	4
		78.0	12	12	9	5	5	8	6	4	4	3	7	4	3	3	3	14	14	12	9	7	10	8	5	6	5	9	5	3	5	4
		100.0	9	9	5	4	3	7	4	3	3	3	7	4	3	3	3	11	11	6	7	5	9	5	3	5	4	9	5	3	5	4
	* * 1/4"Ø ELCO MALE/ FEMALE "PANELMATE" W/ 1-1/4 MIN. EMBEDMENT & 1/4-20 MACHINE SCREW WITH NUT	40.0	12	12	12	12	10	12	12	12	8	7	11	11	8	6	5	12	12	12	12	12	12	12	12	10	9	12	12	10	7	6
		52.0	12	12	12	9	8	11	11	10	6	5	8	8	4	4	4	12	12	12	12	10	12	12	12	8	6	10	10	5	6	5
		62.0	12	12	12	8	6	9	9	6	5	4	7	4	3	4	3	12	12	12	10	8	12	12	7	6	5	8	5	4	5	4
		78.0	11	11	9	6	5	7	6	3	4	3	6	4		3	3	12	12	11	8	6	9	8	4	5	4	8	5	3	4	4
		100.0	8	8	4	5	4	6	4		3	3	6	4		3	3	11	11	6	6	5	8	5	3	4	4	8	5	3	4	4
	1/4"Ø ELCO CRETE FLEX OR CRETE MAX W/ 1-1/4" MIN. EMBEDMENT	40.0	14	14	14	14	14	14	14	14	11	9	14	14	12	8	7	14	14	14	14	14	14	14	14	14	12	14	14	14	10	8
		52.0	14	14	14	13	11	14	14	14	9	7	12	12	6	6	5	14	14	14	14	13	14	14	14	11	9	14	14	8	8	6
		62.0	14	14	14	10	9	14	14	9	7	6	10	6	4	5	4	14	14	14	13	11	14	14	11	9	8	13	8	5	6	5
		78.0	14	14	13	8	7	11	9	5	6	5	9	5	4	5	4	14	14	14	10	9	14	11	7	7	6	12	7	5	6	5
		100.0	13	13	7	6	5	9	5	4	5	4	9	5	4	5	4	14	14	8	8	7	12	7	5	6	5	12	7	5	6	5

ANCHOR NOTES:

1. SPANS AND LOADS SHOWN HERE ARE FOR DETERMINING ANCHOR SPACING ONLY. ALLOWABLE STORM PANEL SPANS FOR SPECIFIC LOADS MUST BE LIMITED TO THOSE SHOWN IN TABLE 1, SHEET 6.
2. ENTER ANCHOR SCHEDULE BASED ON THE EXISTING STRUCTURE MATERIAL, ANCHOR TYPE AND EDGE DISTANCE. SELECT DESIGN LOAD GREATER THAN OR EQUAL TO NEGATIVE DESIGN LOAD ON SHUTTER AND SELECT SPAN GREATER THAN OR EQUAL TO SHUTTER SPAN.
3. SEE MOUNTING SECTION DETAILS FOR IDENTIFICATION OF CONNECTION TYPE.
4. EXISTING STRUCTURE MAY BE CONCRETE, HOLLOW BLOCK OR WOOD FRAMING. REFERENCE ANCHOR SCHEDULE FOR PROPER ANCHOR TYPE BASED ON TYPE OF EXISTING STRUCTURE.
5. ANCHORS SHALL BE INSTALLED IN ACCORDANCE WITH MANUFACTURERS' RECOMMENDATIONS.
6. MINIMUM EMBEDMENT AND EDGE DISTANCE EXCLUDES WALL FINISH OR STUCCO.
7. WHERE EXISTING STRUCTURE IS WOOD FRAMING, WOOD FRAMING CONDITIONS VARY. FIELD VERIFY THAT FASTENERS ARE INTO ADEQUATE WOOD FRAMING MEMBERS, NOT PLYWOOD. FASTENING TO PLYWOOD IS ACCEPTABLE ONLY FOR SIDE CLOSURE PIECES.
8. WHERE LAG SCREWS FASTEN TO NARROW FACE OF STUD FRAMING, FASTENER SHALL BE LOCATED IN CENTER OF NOMINAL 2" x 4" (MIN.) WOOD STUD. 3/4" EDGE DISTANCE IS ACCEPTABLE FOR WOOD FRAMING. WOOD STUD SHALL BE "SOUTHERN PINE" G=0.55 OR GREATER DENSITY. LAG SCREWS SHALL HAVE PHILLIPS PAN HEAD OR HEX HEAD.
9. MACHINE SCREWS SHALL HAVE MINIMUM OF 1/2" ENGAGEMENT OF THREADS IN BASE ANCHOR AND MAY HAVE EITHER A PAN HEAD, TRUSS HEAD, OR WAFER HEAD (SIDEWALK BOLT), U.O.N.
10. ▨ DESIGNATES ANCHOR CONDITIONS WHICH ARE NOT ACCEPTABLE USES.
11. * DESIGNATES ANCHORS WHICH ARE REMOVABLE BY REMOVING MACHINE SCREW, NUT OR WASHERED WINGNUT.

PRODUCT REVISED
as complying with the Florida Building Code
Acceptance No 03-0421.12
Expiration Date 07/19/2006
By Helmy A. Molar
Miami Dade Product Control Division

KNEZEVICH & ASSOCIATES, INC.
CONSULTING ENGINEERS • PRODUCT TESTING
1260 N. UNIVERSITY DRIVE, SUITE 180 • FORT LAUDERDALE, FL 33322
TEL: (954) 382-2800 • FAX: (954) 382-2989 • FLORIDA COA #3205
WEBSITE: WWW.KNEZEVICH.COM • E-MAIL: KA@KNEZEVICH.COM

COPYRIGHT © 2003 KNEZEVICH & ASSOCIATES, INC

0-0615
ALUMINUM STORM PANEL

Town & Country INDUSTRIES, INC.
400 WEST McNAB ROAD • (800) 432-5019
FT. LAUDERDALE, FL 33309

V.J. KNEZEVICH
PROFESSIONAL ENGINEER
FL License No: PE-0010983
SEP 23 2003

revisions			
no	date	by	description
0	04/04/03	DLB	PREV. DWG. No. 00-205
1	09/23/03	DLB	COUNTY COMM. (GEN. NOTES)

date 04/04/2003
scale AS NOTED | drawn by MCR
design by VJK | checked by VJK
drawing no. 03-260
sheet 5 of 6

Print Information: \\hurricane\ka\CADD\Cadd03\TnC\03-260\R1-sub\03-360-05.dwg MCantu 09/23/2003 04:26:47pm 09/23/03 16:22

Print Information: \\hurricane\ka\CADD\Cadd03\TnC\03-260\R1-sub\03-360-06.dwg MCantu 09/23/2003 04:26:55pm 09/23/03 16:23

TABLE 2 — MINIMUM STORM PANEL SEPARATION FROM GLASS

POSITIVE DESIGN LOAD (W) (P.S.F.)	ACTUAL SPAN (L) (FT - IN)	COLUMN 1: MIN. SEP. FOR ALL INSTALLATIONS LESS THAN 30' ABOVE GRADE (INCHES)	COLUMN 2: MIN. SEP. FOR ALL INSTALLATIONS GREATER THAN 30' ABOVE GRADE (INCHES)
40.0	8-8	3	2
	10-9	4-1/8	3-1/8
50.0	8-8	3	2-1/4
	10-2	4-1/8	3-1/8
60.0	8-8	3	2-3/8
	9-8	4-1/8	3
70.0	4-0	3	1-3/8
	8-8	3	2-5/8
	9-4	4-1/8	3-1/8
80.0	4-0	3	1-3/8
	8-11	4-1/8	3
90.0	4-0	3	1-3/8
	8-4	3	2-3/4
100.0	4-0	3	1-3/8
	7-6	3	2-3/8
110.0	4-0	3	1-3/8
	6-9	3	2-1/8
120.0	3-0	3	1-3/8
	6-3	3	1-7/8

TABLE 1 NOTES:

1. DETERMINE BOTH THE POSITIVE AND THE NEGATIVE WIND LOADS. CHECK THEIR RESPECTIVE SPANS AND USE THE LESSER VALUE OF THE TWO.
2. FOR DESIGN LOADS BETWEEN TABULATED VALUES USE NEXT HIGHER LOAD OR LINEAR INTERPOLATION MAY BE USED TO DETERMINE ALLOWABLE SPANS.

TABLE 2 NOTE:

1. ENTER TABLE 2 WITH POSITIVE DESIGN LOAD TO DETERMINE MIN. STORM SHUTTER SEPARATION FROM GLASS.

TABLE 1 — MAX. ALLOWABLE STORM PANEL SPAN SCHEDULE

NEG. DESIGN LOAD (P.S.F.)	Lmax. SPAN (FT - IN)
25.0	12'-0"
30.0	11'-5"
35.0	11'-0"
40.0	10'-7"
45.0	10'-4"
50.0	10'-0"
55.0	9'-10"
60.0	9'-7"
62.0	9'-6"
65.0	9'-5"
70.0	9'-1"
72.0	9'-0"
75.0	8'-9"
80.0	8'-3"
90.0	7'-4"
100.0	6'-7"
110.0	6'-0"
120.0	5'-6"
130.0	5'-1"
140.0	5'-0"
150.0	5'-0"
160.0	4'-10"
170.0	4'-7"
180.0	4'-3"
190.0	4'-1"
200.0	3'-10"
210.0	3'-8"
220.0	3'-6"
230.0	3'-4"

ANCHOR SCHEDULE

FASTENER MAXIMUM SPACING (INCHES) REQUIRED FOR VARIOUS DESIGN LOADS AND SPANS

EXISTING STRUCTURE	ANCHOR TYPE	LOAD (W) P.S.F. MAX. (SEE NOTE 1)	MIN. 3/4" EDGE DISTANCE: SPANS UP TO 6' - 0" (SEE NOTE 1) CONNECTION TYPE (SEE NOTE 3)					SPANS UP TO 8' - 8" (SEE NOTE 1) CONNECTION TYPE (SEE NOTE 3)					SPANS UP TO 12' - 0" (SEE NOTE 1) CONNECTION TYPE (SEE NOTE 3)				
			C1	C2	C3	C4	C5	C1	C2	C3	C4	C5	C1	C2	C3	C4	C5
WOOD	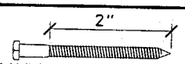 1/4"Ø x 3" MIN. LONG WOOD LAG SCREW W/ 2" MIN. EMBEDMENT SHEAR PARALLEL OR PERPENDICULAR TO WOOD GRAIN	40.0	14	14	14	14	13	14	14	14	10	9	14	14	14	7	6
		52.0	14	14	14	11	10	14	14	14	8	7	14	14	12	5	5
		62.0	14	14	14	9	8	14	14	14	6	6	14	13	9	4	4
		78.0	14	14	14	7	7	14	14	11	5	4	14	11	8	4	4
		100.0	14	14	14	6	5	14	11	8	4	4	14	11	8	4	4
	* 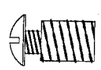 7/16"Ø WOOD BUSHING W/ 5/8" MIN. EMBEDMENT & 1/4-20 STAINLESS STEEL MACHINE SCREW	40.0	14	14	14			14	14	14			11	11	8		
		52.0	14	14	14			12	12	10			8	8	4		
		62.0	14	14	14			10	10	6			7	4	3		
		78.0	11	11	9			8	6	4			7	4	3		
		100.0	9	9	5			7	4	3			7	4	3		

ANCHOR NOTES:

1. SEE SHEET 5 OF 6 FOR COMPLETE ANCHOR NOTES.

PRODUCT REVISED
as complying with the Florida Building Code
Acceptance No 03-0421.12
Expiration Date 07/19/2006
By Helena A. Wells
Miami Dade Product Control Division

KNEZEVICH & ASSOCIATES, INC.
CONSULTING ENGINEERS • PRODUCT TESTING
1260 N. UNIVERSITY DRIVE, SUITE 180 • FORT LAUDERDALE, FL 33322
TEL: (954) 382-2800 • FAX: (954) 382-2989 • FLORIDA COA #3205
WEBSITE: WWW.KNEZEVICH.COM • E-MAIL: KA@KNEZEVICH.COM
COPYRIGHT © 2003 KNEZEVICH & ASSOCIATES, INC

0-0615"
ALUMINUM STORM PANEL

Town & Country INDUSTRIES, INC.
400 WEST McNAB ROAD • (800) 432-5019
FT. LAUDERDALE, FL 33309

V.J. KNEZEVICH
PROFESSIONAL ENGINEER
FL License No: PE 0010983
SEP 23 2003

revisions			
no	date	by	description
0	04/04/03	OLB	PREV. DWG. No. 00-205
1	09/23/03	OLB	COUNTY COMM. (GEN. NOTES)

date 04/04/2003
scale AS NOTED | drawn by MCR
design by VJK | checked by VJK
drawing no. 03-260
sheet 6 of 6