MIAMI-DADE

BUILDING CODE COMPLIANCE OFFICE (BCCO)
PRODUCT CONTROL DIVISION

MIAMI-DADE COUNTY, FLORIDA
METRO-DADE FLAGLER BUILDING
140 WEST FLAGLER STREET, SUITE 1603
MIAMI, FLORIDA 33130-1563
(305) 375-2901 FAX (305) 375-2908

NOTICE OF ACCEPTANCE (NOA)

Southern Metal Products, LLC
450 West McNab Road
Ft. Lauderdale, Florida 33309

SCOPE:
This NOA is being issued under the applicable rules and regulations governing the use of construction materials. The documentation submitted has been reviewed by Miami-Dade County Product Control Division and accepted by the Board of Rules and Appeals (BORA) to be used in Miami Dade County and other areas where allowed by the Authority Having Jurisdiction (AHJ).

This NOA shall not be valid after the expiration date stated below. The Miami-Dade County Product Control Division (In Miami Dade County) and/or the AHJ (in areas other than Miami Dade County) reserve the right to have this product or material tested for quality assurance purposes. If this product or material fails to perform in the accepted manner, the manufacturer will incur the expense of such testing and the AHJ may immediately revoke, modify, or suspend the use of such product or material within their jurisdiction. BORA reserves the right to revoke this acceptance, if it is determined by Miami-Dade County Product Control Division that this product or material fails to meet the requirements of the applicable building code.

This product is approved as described herein, and has been designed to comply with the High Velocity Hurricane Zone of the Florida Building Code.

DESCRIPTION: 0.038" (min.) Galvanized Steel Storm Panel Shutter

APPROVAL DOCUMENT: Drawing No. 03-269, titled " 20 ga. Steel Storm Panel ", sheets 1 through 7 of 7, prepared by Knezevich & Associates, Inc., dated April 18, 2003, last revision #0 dated April 18, 2003 bearing the Miami-Dade County Product Control Revision stamp with the Notice of Acceptance number and expiration date by the Miami-Dade County Product Control Division.

MISSILE IMPACT RATING: Large and Small Missile Impact

LABELING: Each panel shall bear a permanent label with the manufacturer's name or logo, city, state and the following statement: "Miami-Dade County Product Control Approved", unless otherwise noted herein.

RENEWAL of this NOA shall be considered after a renewal application has been filed and there has been no change in the applicable building code negatively affecting the performance of this product.

TERMINATION of this NOA will occur after the expiration date or if there has been a revision or change in the materials, use, and/or manufacture of the product or process. Misuse of this NOA as an endorsement of any product, for sales, advertising or any other purposes shall automatically terminate this NOA. Failure to comply with any section of this NOA shall be cause for termination and removal of NOA.

ADVERTISEMENT: The NOA number preceded by the words Miami-Dade County, Florida, and followed by the expiration date may be displayed in advertising literature. If any portion of the NOA is displayed, then it shall be done in its entirety.

INSPECTION: A copy of this entire NOA shall be provided to the user by the manufacturer or its distributors and shall be available for inspection at the job site at the request of the Building Official.

This NOA **revises & renews NOA # 00-0426.06** & consists of this page 1 & approval document mentioned above
The submitted documentation was reviewed by **Helmy A. Makar, P.E.**

Helmy A. Makar
07/10/03

PRODUCT CONTROL ACCEPTED

NOA No 03-0423.02
Expiration Date: 07/31/2008
Approval Date: 07/10/2003

GENERAL NOTES:

1. THESE APPROVAL DOCUMENTS REPRESENT A SHUTTER SYSTEM ANALYZED WITH THE PROVISION SET FOR THE ISSUANCE OF A NOTICE OF ACCEPTANCE (NOA) BY MIAMI-DADE COUNTY PRODUCT CONTROL DIVISION FOR THE HIGH VELOCITY HURRICANE ZONE (HVHZ) OF THE FLORIDA BUILDING CODE.
2. TO VERIFY THAT THE ANCHORS AS TESTED, ARE NOT OVERSTRESSED IN THESE APPROVAL DOCUMENTS, A 33% INCREASE IN ALLOWABLE STRESS WAS USED IN THE FASTENER ANALYSIS.
3. DETERMINE THE POSITIVE AND NEGATIVE DESIGN LOADS TO USE WHEN REFERENCING THESE DOCUMENTS IN ACCORDANCE WITH THE GOVERNING CODE AND GOVERNING WIND VELOCITY. FOR WIND LOAD CALCULATIONS IN ACCORDANCE WITH ASCE 7-98, A DIRECTIONALITY FACTOR OF Kd =1.0 SHALL BE USED.
4. THESE APPROVAL DOCUMENTS ARE GENERIC AND DO NOT INCLUDE INFORMATION FOR SITE-SPECIFIC APPLICATION OF THIS SHUTTER SYSTEM.
5. THESE APPROVAL DOCUMENTS COMPLY WITH CHAPTER 61G15-23 OF THE FLORIDA ADMINISTRATIVE CODE.
6. THESE APPROVAL DOCUMENTS, ARE SUITABLE TO BE APPLIED BY THE CONTRACTOR PROVIDED THE CONTRACTOR DOES NOT DEVIATE FROM THE CONDITIONS DETAILED HEREIN AND THE CONTRACTOR VERIFIES THAT THE EXISTING STRUCTURE DOES NOT DEVIATE IN EITHER FORM OR MATERIAL FROM THE STRUCTURAL SUBSTRATES DETAILED HEREIN.
7. ANY MODIFICATIONS OR ADDITIONS TO THESE APPROVAL DOCUMENTS WILL VOID THE APPROVAL DOCUMENTS.
8. WHEN THE SITE CONDITIONS DEVIATE FROM THESE APPROVAL DOCUMENTS, THE BUILDING OFFICIAL MAY ELECT ONE OF THE FOLLOWING OPTIONS:
   - A) REQUIRE THAT SITE SPECIFIC DOCUMENTS BE PREPARED, SIGNED, DATED AND SEALED BY A LICENSED ENGINEER OR REGISTERED ARCHITECT, WHICH DETAIL AND JUSTIFY THE DEVIATION. SAID DOCUMENTS SHALL BE SUBMITTED TO THE PRODUCT ENGINEER FOR REVIEW AS A CONDITION TO THE BUILDING OFFICIAL GRANTING HIS/HER APPROVAL.
   - B) REQUIRE THAT A ONE-TIME SITE SPECIFIC APPROVAL BE APPLIED FOR AND SECURED FROM THE MIAMI-DADE COUNTY PRODUCT CONTROL DIVISION

   WHEN THE SITE CONDITION DEVIATIONS OCCUR WITHIN THE HIGH VELOCITY HURRICANE ZONE AREAS ONLY OPTION "B" SHALL BE ACCEPTED BY THE BUILDING OFFICIAL.
9. PRODUCT MARKINGS SHALL BE WITHIN 12" OF ONE END OF THE PANEL WITH A MINIMUM OF ONE MARKING PER PANEL AND SHALL BE PERMANENTLY LABELED AS FOLLOWS:

   B H P C O
   FORT LAUDERDALE, FLORIDA
   MIAMI-DADE COUNTY PRODUCT CONTROL APPROVED
10. ALL BOLTS AND WASHERS SHALL BE GALVANIZED OR STAINLESS STEEL WITH A MINIMUM TENSILE STRENGTH OF 60 KSI.
11. STORM PANELS SHALL BE 20 GAUGE STEEL (t = .038") CONFORMING TO ASTM A653-94, HIGH STRENGTH LOW ALLOY, TYPE 2 GRADE 50, GALV. IN ACCORDANCE WITH ASTM G60.
12. ALL EXTRUSIONS SHALL BE 6063-T6 ALUMINUM ALLOY, U.O.N
13. PANELS SHALL BE FASTENED AT MID SPAN W/ 1/4-20 x 1" BOLTS WITH DIE CAST ALUMINUM WASHERED WING NUTS OR JACK NUTS (SEE TYPICAL ELEVATION 8). FOR SPANS LESS THAN 33", OVERLAP FASTENERS ARE NOT REQUIRED.
14. TOP & BOTTOM DETAILS SHOWN MAY BE INTERCHANGED AS FIELD CONDITIONS DICTATE. PANELS MAY BE MOUNTED HORIZONTALLY WHERE APPLICABLE, EXCEPT FOR "h" AND "U" HEADER MOUNTING CONDITIONS.
15. AT LEAST ONE WARNING NOTE PER OPENING SHALL BE PLACED IN A CONSPICUOUS LOCATION ON ANY OF THE COMPONENTS OF THE STORM PANEL SYSTEM ADVISING THE HOME OWNER OR TENANT THAT THE STORM PANELS WILL NOT OFFER HURRICANE PROTECTION UNLESS ALL REINFORCING BOLTS ARE PROPERLY INSTALLED WHEN REQUIRED. WARNING LABEL SHALL BE FASTENED WITH PERMANENT ADHESIVE OR MECHANICALLY.

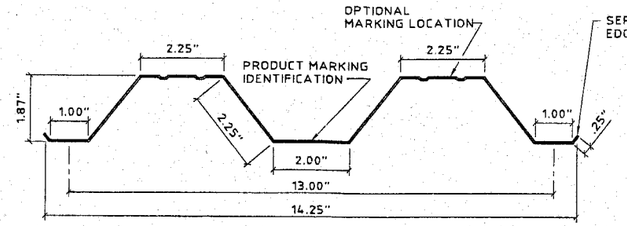

FULL PANEL

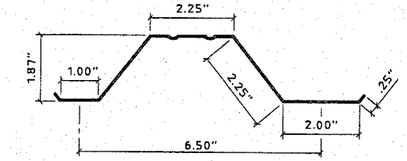

HALF PANEL

ONE HALF PANEL PER OPENING MAY BE USED AS REQUIRED TO COVER OPENING.

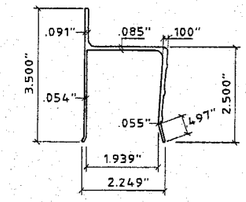

1 STORM PANEL
SCALE : 3" = 1'-0"

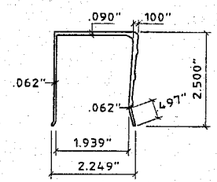

3 "U" HEADER
SCALE : 3" = 1'-0"

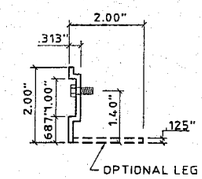

4 "SEA" ANGLE
SCALE : 3" = 1'-0"

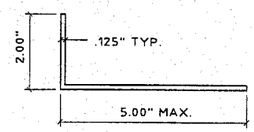

5 ANGLE
SCALE : 3" = 1'-0"

2 "h" HEADER
SCALE : 3" = 1'-0"

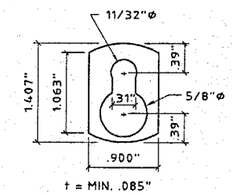

6 "KEYHOLE" WASHER
SCALE : 3" = 1'-0"
3003-H14 ALUMINUM ALLOY

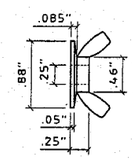

7 WINGNUT
SCALE : HALF SIZE

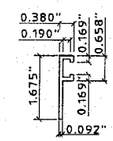

9 "F" - TRACK
SCALE : 3" = 1'-0"

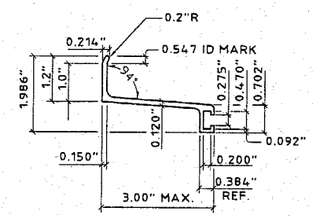

10 EXTENDED "F" - TRACK
SCALE : 3" = 1'-0"

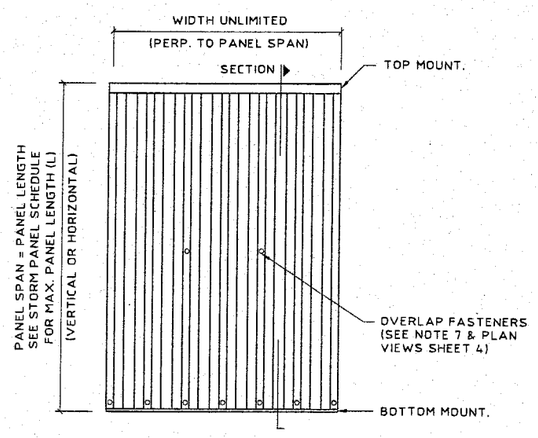

8 TYPICAL ELEVATION
FOR ALL INSTALLATIONS SEE TABLE 2, PAGE 4 OF 7 , FOR REQUIRED SEPARATION FROM GLASS.

PRODUCT REVISED
as complying with the Florida Buiding Code
Acceptance No 03-0423.02
Expiration Date 07/31/2008
By Helmy A. Mela
Miami Dade Product Control Division

KNEZEVICH & ASSOCIATES, INC.
CONSULTING ENGINEERS • PRODUCT TESTING
1260 N. UNIVERSITY DRIVE, SUITE 180 • FORT LAUDERDALE, FL 33322
TEL: (954) 382-2800 • FAX: (954) 382-2989 • FLORIDA COA #3205
WEBSITE: WWW.KNEZEVICH.COM • E-MAIL: KA@KNEZEVICH.COM

COPYRIGHT © 2003 KNEZEVICH & ASSOCIATES, INC

20 GA. STEEL STORM PANEL
SOUTHERN METAL PRODUCTS, LLC - D.B.A.
ALL BROWARD HURRICANE
450 West McNab Road
Ft. Lauderdale, FL 33309
1-800-HURRICANE
PANEL

V.J. KNEZEVICH
PROFESSIONAL ENGINEER
FL License No: PE 0010983
APR 18 2003

revisions			
no	date	by	description
0	04/18/03	DLB	PREVIOUSLY DWG No. 98-128

date 04/18/2003
scale AS NOTED | drawn by AV
design by DLB | checked by VJK
drawing no. 03-269
sheet 1 of 7

Print Information: J:\CADD\Cadd03\All_Broward\03-269\R1-sub\03-269-01.dwg AVazquez 04/18/2003 11:17:21am
04/18/03 11:17

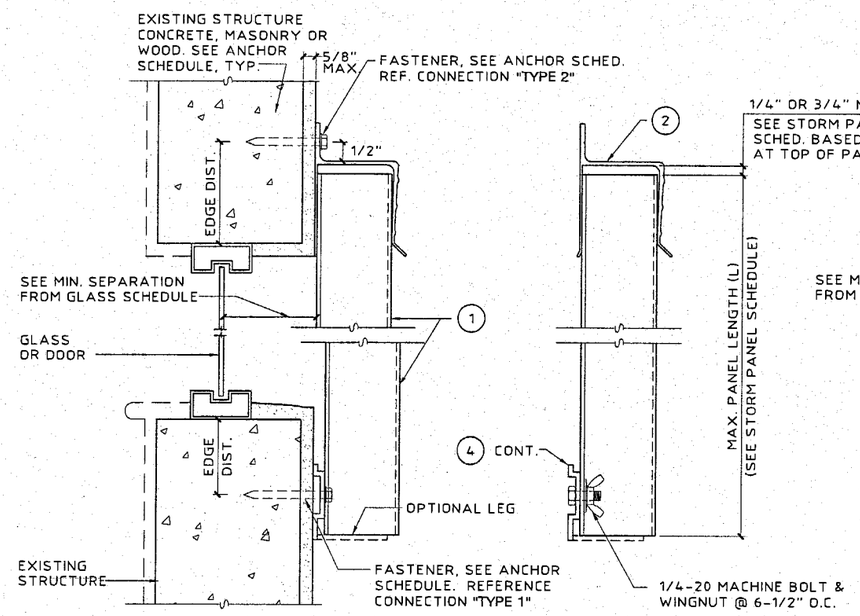

A WALL MOUNT SECTION

SCALE : 3" = 1'-0"

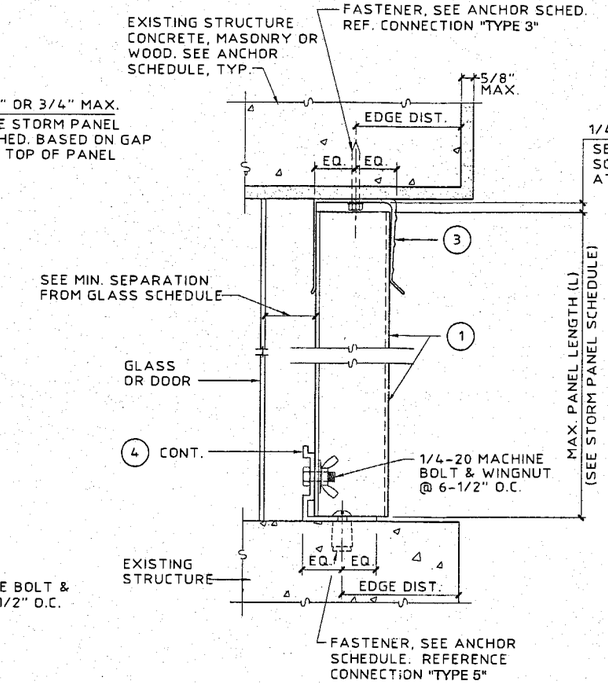

B CEILING/INSIDE MOUNT SECTION

SCALE : 3" = 1'-0"

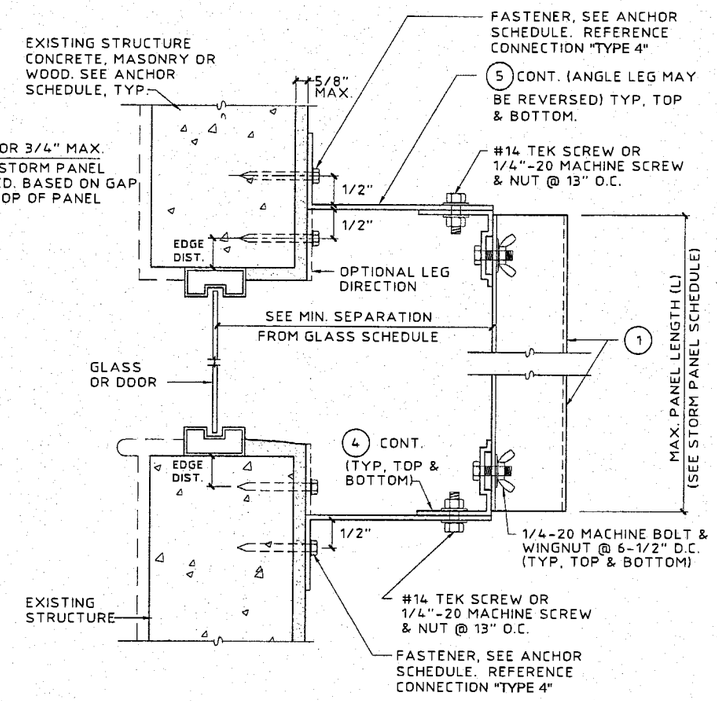

C BUILD-OUT MOUNT SECTION

SCALE : 3" = 1'-0"

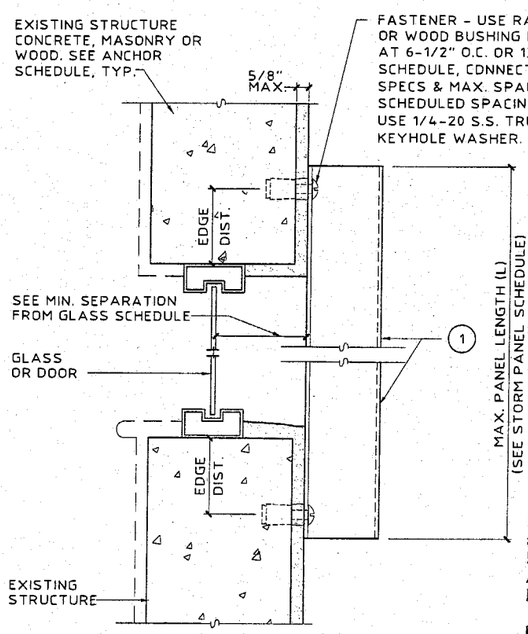

D DIRECT MOUNT SECTION

SCALE : 3" = 1'-0"

PRODUCT REVISED
as complying with the Florida
Building Code
Acceptance No. 03-0423.02
Expiration Date 07/31/2008
By Helena A. Melo
Miami Dade Product Control
Division

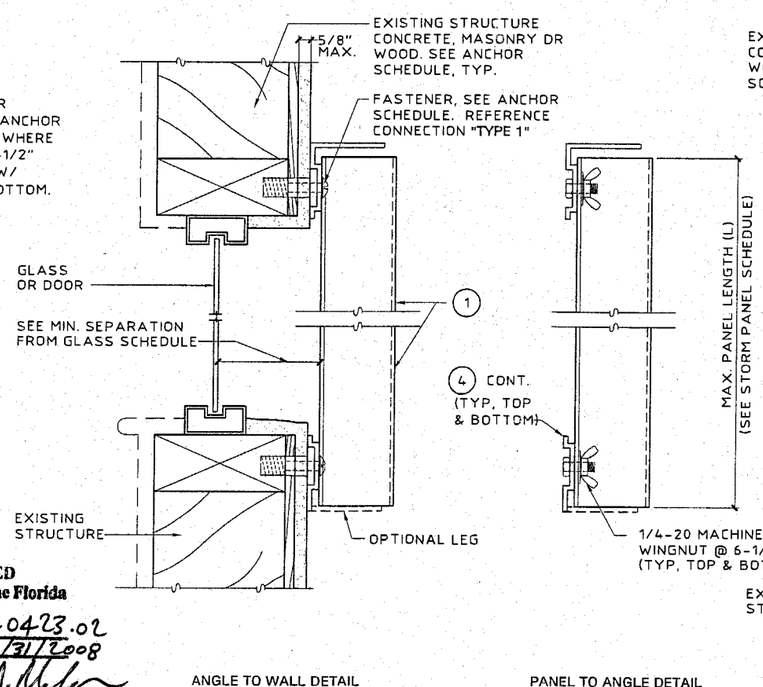

E WALL MOUNT SECTION

SCALE : 3" = 1'-0"

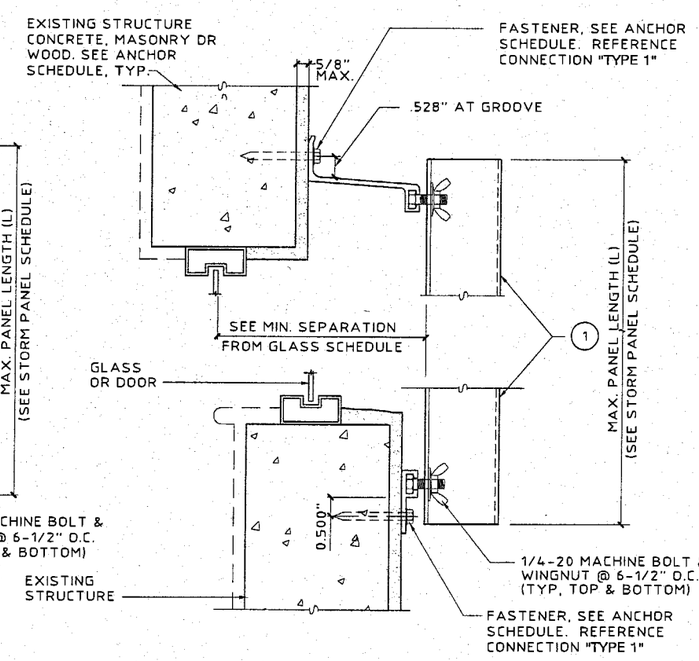

V WALL MOUNT SECTION

SCALE : 3" = 1'-0"

KNEZEVICH & ASSOCIATES, INC.
CONSULTING ENGINEERS • PRODUCT TESTING
1260 N. UNIVERSITY DRIVE, SUITE 180 • FORT LAUDERDALE, FL 33322
TEL: (954) 382-2800 • FAX: (954) 382-2989 • FLORIDA COA #3205
WEBSITE: WWW.KNEZEVICH.COM • E-MAIL: KA@KNEZEVICH.COM

COPYRIGHT © 2003 KNEZEVICH & ASSOCIATES, INC

20 GA. STEEL STORM PANEL

SOUTHERN METAL PRODUCTS, LLC - D.B.A.

ALL BROWARD HURRICANE PANEL
450 West McNab Road
Ft. Lauderdale, FL 33309
1-800-HURRICANE

V.J. KNEZEVICH
PROFESSIONAL ENGINEER
FL License No. PE 0010983

APR 18 2003

revisions

no	date	by	description
0	04/18/03	DLB	PREVIOUSLY DWG No. 98-128

date 04/18/2003

scale AS NOTED | drawn by AV

design by DLB | checked by VJK

drawing no. 03-269

sheet 2 of 7

Print Information: J:\CADD\Cadd03\All_Broward\03-269\R1-sub\03-269-02.dwg AVazquez 04/18/2003 11:17:51am

04/18/03 11:17

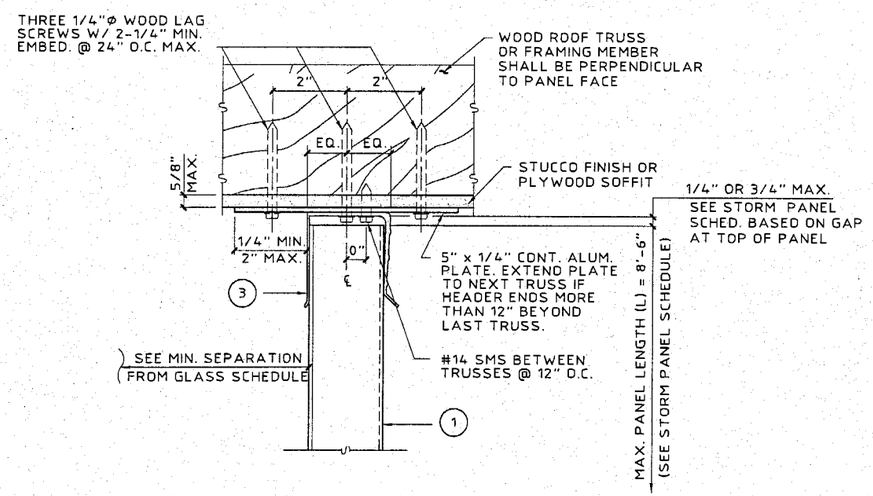

(MAX DESIGN LOAD ± 62 PSF)

(F) SOFFIT CONNECTION DETAIL

SCALE : 3" = 1'-0"

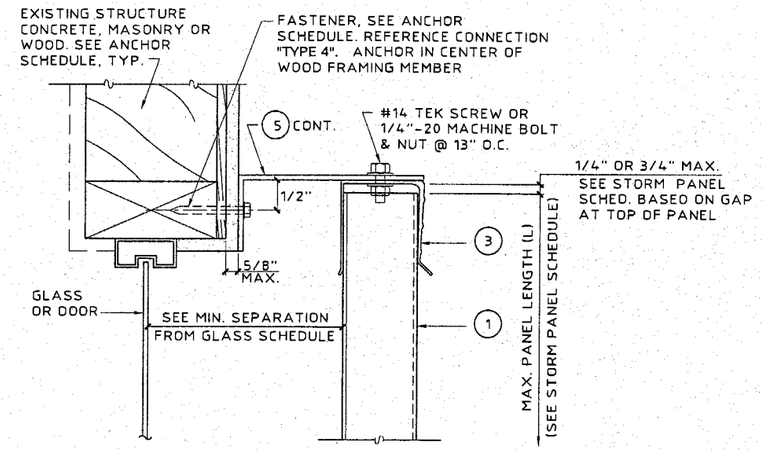

(G) BUILD-OUT SECTION

SCALE : 3" = 1'-0"

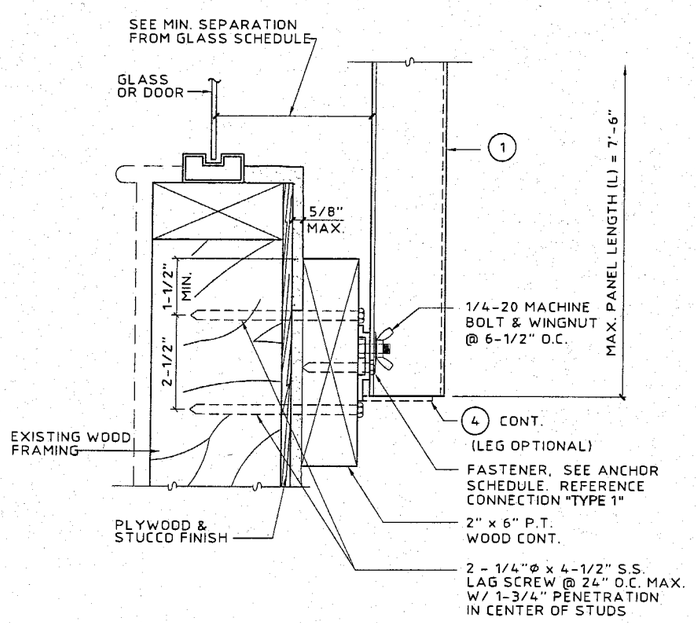

(MAX DESIGN LOAD ± 72 PSF)

(H) ALT. WALL MOUNT SECTION

SCALE : 3"= 1'- 0"

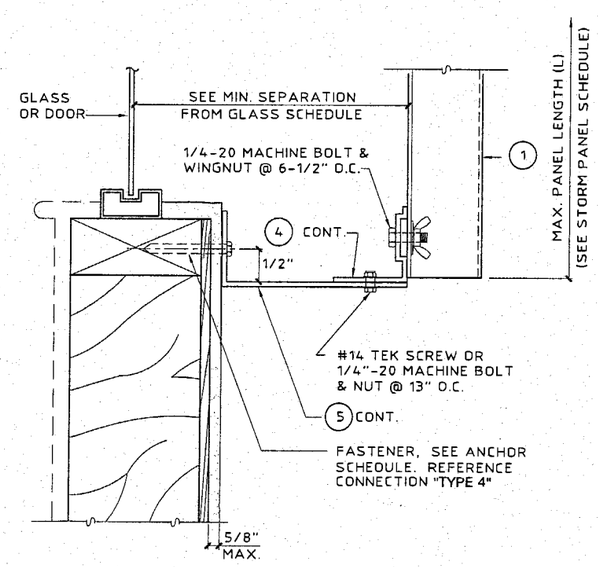

(I) BUILD-OUT SECTION

SCALE : 3" = 1'-0"

PRODUCT REVISED
as complying with the Florida Buiding Code
Acceptance No 03-0423.02
Expiration Date 07/31/2008
By [signature]
Miami Dade Product Control Division

KNEZEVICH & ASSOCIATES, INC.
CONSULTING ENGINEERS • PRODUCT TESTING
1260 N. UNIVERSITY DRIVE, SUITE 180 • FORT LAUDERDALE, FL 33322
TEL: (954) 382-2800 • FAX: (954) 382-2989 • FLORIDA COA #3205
WEBSITE: WWW.KNEZEVICH.COM • E-MAIL: KA@KNEZEVICH.COM

COPYRIGHT © 2003 KNEZEVICH & ASSOCIATES, INC.

20 GA. STEEL STORM PANEL

SOUTHERN METAL PRODUCTS, LLC - D.B.A.
ALL BROWARD HURRICANE PANEL
450 West McNab Road
Ft. Lauderdale, FL 33309
1-800-HURRICANE

V.J. KNEZEVICH
PROFESSIONAL ENGINEER
Fl. License No: PE 0010983

APR 18 2003

revisions

no	date	by	description
0	04/18/03	OLB	PREVIOUSLY DWG No. 98-128

date 04/18/2003
scale AS NOTED
drawn by AV
design by OLB
checked by VJK
drawing no. 03-269
sheet 3 of 7

Print Information: J:\CADD\Cadd03\All_Broward\03-269\R1-sub\03-269-03.dwg AVazquez 04/18/2003 11:18:20am

04/18/03 11:18

TABLE 1 — STORM PANEL SCHEDULE

DESIGN LOAD W (PSF)	MOUNTINGS USING PIECE (4), (9) OR (10) TOP & BOTTOM		ANY MOUNTING CONDITIONS (MAX. 1/4" SPACE BETWEEN PANEL AND HEADER)	ANY MOUNTING CONDITIONS (MAX. 3/4" SPACE BETWEEN PANEL AND HEADER)
	(A) L max. (FT-IN)		(B) L max. (FT-IN)	(C) L max. (FT-IN)
	POS. LOAD	NEG. LOAD	POS. LOAD NEG. LOAD	POS. LOAD NEG. LOAD
40.0	11 - 5	11 - 5	11 - 5	8 - 8
45.0	11 - 5	11 - 5	11 - 5	8 - 8
50.0	11 - 1	11 - 4	11 - 1	8 - 8
55.0	10 - 6	10 - 10	10 - 6	8 - 8
60.0	10 - 1	10 - 4	10 - 1	8 - 8
62.0	9 - 11	10 - 2	9 - 11	8 - 8
65.0	9 - 8	9 - 11	9 - 8	8 - 8
70.0	9 - 4	9 - 7	9 - 4	8 - 6
72.0	9 - 2	9 - 5	9 - 2	8 - 4
75.0	9 - 0	9 - 3	9 - 0	8 - 0
80.0	8 - 9	8 - 11	8 - 9	7 - 6
90.0	7 - 10	8 - 3	7 - 10	6 - 8
100.0	7 - 1	7 - 5	7 - 1	6 - 0
110.0	6 - 5	6 - 9	6 - 5	5 - 5
120.0	5 - 11	6 - 2	5 - 11	5 - 0
130.0	5 - 5	5 - 8	5 - 5	4 - 7
140.0	5 - 0	5 - 3	5 - 0	4 - 3
150.0	4 - 8	4 - 11	4 - 8	4 - 0
160.0	4 - 5	4 - 7	4 - 5	3 - 9
170.0	4 - 2	4 - 4	4 - 2	3 - 6
180.0	3' - 11	4 - 1	3' - 11	3 - 4
190.0	3 - 8	3 - 11	3 - 8	3 - 1
200.0	3 - 7	3 - 9	3 - 7	3 - 0
210.0	3 - 4	3 - 6	3 - 4	2 - .10

TABLE 2 — MIN. SEPARATION FROM GLASS SCHEDULE

POSITIVE DESIGN LOAD(W) (PSF)	ACTUAL SHUTTER SPAN (L) (FT - IN)	MINIMUM SEPARATION FOR INSTALLATIONS 30' OR LESS ABOVE GRADE (INCHES)	MINIMUM SEPARATION FOR INSTALLATIONS GREATER THAN 30' ABOVE GRADE (INCHES)
40.0	5 - 0	2-3/8	1-1/2
	8 - 8	2-3/8	1-3/4
	11 - 5	2-7/8	2-5/8
45.0	4 - 0	2-3/8	1-1/4
	8 - 8	2-3/8	1-3/4
	11 - 5	2-7/8	2-7/8
50.0	5 - 0	2-3/8	1-1/4
	8 - 8	2-3/8	1-7/8
	11 - 4	3	3
60.0	5 - 0	2-3/8	1-1/4
	8 - 8	2-3/8	1-7/8
	10 - 8	2-7/8	2-7/8
70.0	5 - 0	2-3/8	1-1/4
	8 - 8	2-3/8	2
	9 - 11	2-7/8	2-5/8
80.0	5 - 0	2-3/8	1-3/8
	8 - 8	2-3/8	2-1/8
	8 - 11	2-7/8	2-1/4
90.0	5 - 0	2-3/8	1-3/8
	8 - 3	2-3/8	2-1/8
100.0	5 - 0	2-3/8	1-3/8
	7 - 5	2-3/8	1-7/8
110.0	5 - 0	2-3/8	1-3/8
	6 - 9	2-3/8	1-3/4
120.0	5 - 0	2-3/8	1-3/8
	6 - 2	2-3/8	1-5/8
130.0	5 - 0	2-3/8	1-3/8
	5 - 8	2-3/8	1-1/2
150.0	4 - 11	2-3/8	1-3/8
170.0	4- 4	2-3/8	1-3/8
190.0	3 - 11	2-3/8	1-1/4
210.0	3 - 6	2-3/8	1-1/4

NOTES:

1. ENTER TABLE 1 WITH THE OPENING'S POSITIVE AND NEGATIVE DESIGN LOADS TO DETERMINE MAX. PANEL LENGTH.
   - FOR COLUMN (A) REFERENCE THE ALLOWABLE SPANS AT BOTH THE POSITIVE AND NEGATIVE LOADS, AND CHOOSE THE SMALLER OF THE OBTAINED VALUES.
   - FOR COLUMNS (B) & (C) REFERENCE THE ALLOWABLE SPANS BASED ON THE HIGHER OF THE POSITIVE AND NEGATIVE LOADS.
2. REFERENCE APPROPRIATE COLUMN IN STORM PANEL SCHEDULE BASED ON MOUNTING CONDITION IN FIELD.
   - COLUMN (A) MAY BE USED ONLY WHERE STUD ANGLE IS USED TOP AND BOTTOM.
   - COLUMN (B) MAY BE USED FOR ANY DETAILED CONDITIONS, INCLUDING DIRECT MOUNT. IF HEADER IS USED, MAX. GAP EQUALS 1/4".
   - COLUMN (C) MAY BE USED FOR ANY DETAILED CONDITIONS, IF HEADER IS USED, MAX. GAP EQUALS 3/4".
3. ENTER TABLE 2 WITH POSITIVE DESIGN LOAD TO DETERMINE MIN. SEPARATION FROM GLASS.
4. FOR DESIGN LOADS BETWEEN TABULATED VALUES, USE NEXT HIGHER LOAD OR LINEAR INTERPOLATION MAY BE USED TO DETERMINE ALLOWABLE PANEL LENGTH.

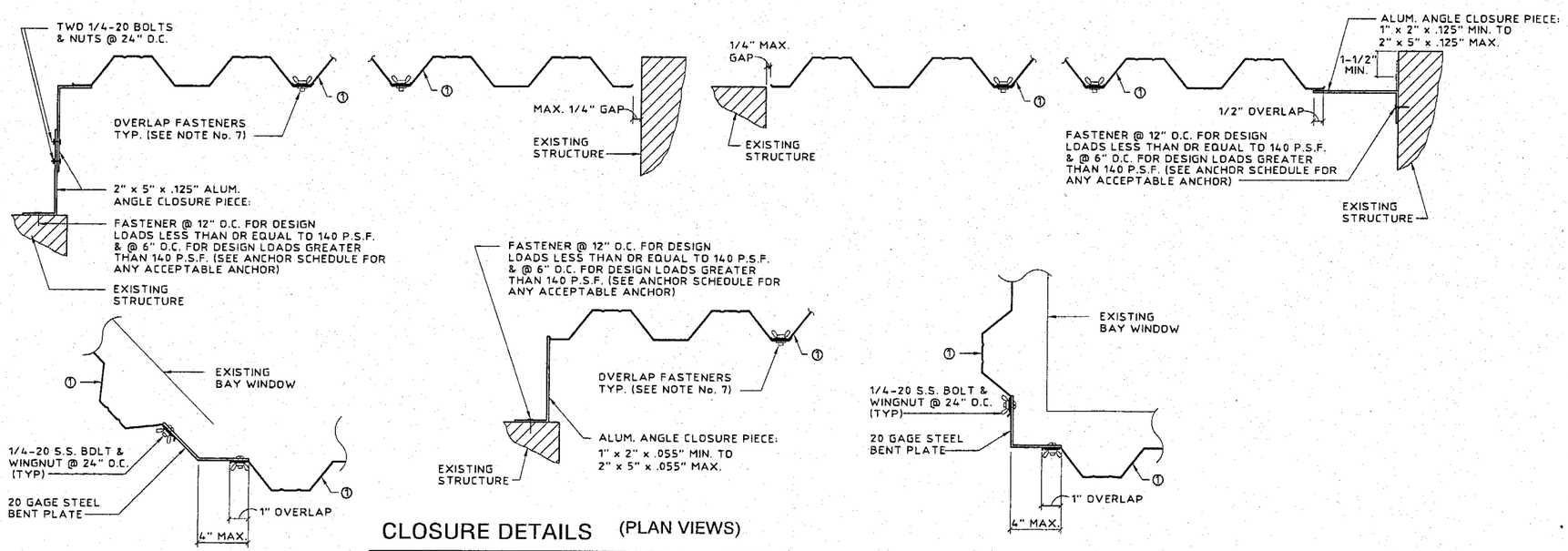

CLOSURE DETAILS (PLAN VIEWS)

SCALE: 1-1/2" = 1'-0"

PRODUCT REVISED
as complying with the Florida Building Code
Acceptance No 03-0423.02
Expiration Date 07/31/2008
By Helmy A. Abdelsalam
Miami Dade Product Control Division

KNEZEVICH & ASSOCIATES, INC.
CONSULTING ENGINEERS • PRODUCT TESTING
1260 N. UNIVERSITY DRIVE, SUITE 180 • FORT LAUDERDALE, FL 33322
TEL: (954) 382-2800 • FAX: (954) 382-2989 • FLORIDA COA #3205
WEBSITE: WWW.KNEZEVICH.COM • E-MAIL: KA@KNEZEVICH.COM

COPYRIGHT © 2003 KNEZEVICH & ASSOCIATES, INC

20 GA. STEEL STORM PANEL

SOUTHERN METAL PRODUCTS, LLC - D.B.A.
ALL BROWARD HURRICANE PANEL
450 West McNab Road
Ft. Lauderdale, FL 33309
1-800-HURRICANE

V.J. KNEZEVICH
PROFESSIONAL ENGINEER
FL License No. PE 0010983
APR 18 2003

revisions

no	date	by	description
0	04/18/03	DLB	PREVIOUSLY DWG No. 98-12

date 04/18/2003
scale AS NOTED
drawn by AV
design by DLB
checked by VJK
drawing no. 03-269
sheet 4 of 7

ANCHOR SCHEDULE

FASTENER SPACING (INCHES) REQUIRED FOR VARIOUS DESIGN LOADS AND SPANS/PANEL LENGTHS

2" EDGE DISTANCE

EXISTING STRUCTURE	ANCHOR TYPE	DESIGN LOAD (W) PSF MAX. (SEE NOTE 1)	SPANS UP TO 6'-0" (SEE NOTE 1) CONNECTION TYPE					SPANS UP TO 8'-8" (SEE NOTE 1) CONNECTION TYPE					SPANS UP TO 11'-4" (SEE NOTE 1) CONNECTION TYPE				
			1	2	3	4	5	1	2	3	4	5	1	2	3	4	5
MIN. 3,000 PSI CONCRETE	1/4"⌀ ITW TAPCON W/ 1-3/4" MIN. EMBEDMENT	56	13	13	13	13	13	13	10	10	9	10	13	5	8	7	7
		62	13	13	13	12	13	13	8	9	8	9	13	5	7	6	7
		72	13	13	11	10	11	13	6	8	7	8	13	4	6.5	6	6.5
		105	13	6	8	7	7	13	4	6.5	6	6.5	13	4	6.5	6	6.5
		210	13	4	6.5	6	6.5	13	4	6.5	6	6.5	13	4	6.5	6	6.5
	* 1/4"⌀ RAWL CALK-IN W/ 7/8" EMBEDMENT & 1/4-20 SIDEWALK BOLT (3/4"⌀ HEAD)	56	13	13	12	13	12	13	10	8	9	8	13	5	6.5	7	6
		62	13	13	11	12	10	13	8	7	8	7	13	4	5	6	5
		72	13	13	9	10	9	13	6	6.5	7	6.5	13	4	5	6	5
		105	13	5	6.5	7	6.5	13	4	5	6	5	13	4	5	6	5
		210	13	4	5	6	5	13	4	5	6	5	13	4	5	6	5
	* 1/4"⌀ ELCO MALE/FEMALE "PANELMATE" W/ 1-1/4" MIN. EMBED. & 1/4-20 MACHINE SCREW/NUT	56	13	13	8	6	7	13	5	5	4	5	10		4	3	4
		62	13	12	7	5	7	12	3	5	4	5	9		3	3	3
		72	13	6.5	6	4	6	10		4	3	4	8		3		3
		105	10		4	3	4	8		3		3	8		3		3
		210	8		3		3	8		3		3	8		3		3

3" EDGE DISTANCE

EXISTING STRUCTURE	ANCHOR TYPE	DESIGN LOAD (W) PSF MAX. (SEE NOTE 1)	SPANS UP TO 6'-0" (SEE NOTE 1) CONNECTION TYPE					SPANS UP TO 8'-8" (SEE NOTE 1) CONNECTION TYPE					SPANS UP TO 11'-4" (SEE NOTE 1) CONNECTION TYPE				
			1	2	3	4	5	1	2	3	4	5	1	2	3	4	5
MIN. 3,000 PSI CONCRETE	1/4"⌀ ITW TAPCON W/ 1-3/4" MIN. EMBEDMENT	56	13	13	13	13	13	13	11	12	10	12	13	6.5	9	7	9
		62	13	13	13	13	13	13	9	11	9	10	13	5	8	7	8
		72	13	13	13	11	13	13	6.5	9	7	9	13	4	7	6.5	7
		105	13	6.5	9	7	9	13	4	7	6.5	7	13	4	7	6.5	7
		210	13	4	7	6.5	7	13	4	7	6.5	7	13	4	7	6.5	7
	* 1/4"⌀ RAWL CALK-IN W/ 7/8" EMBEDMENT & 1/4-20 SIDEWALK BOLT (3/4"⌀ HEAD)	56	13	13	13	13	13	13	13	13	11	13	13	7	10	8	10
		62	13	13	13	13	13	13	10	12	10	12	13	6	9	7	9
		72	13	13	13	12	13	13	7	10	8	10	13	5	8	7	8
		105	13	7	10	8	10	13	5	8	7	8	13	5	8	7	8
		210	13	5	8	7	8	13	5	8	7	8	13	5	8	7	8
	* 1/4"⌀ ELCO MALE/FEMALE "PANELMATE" W/ 1-1/4" MIN. EMBED. & 1/4-20 MACHINE SCREW/NUT	56	13	13	9	6.5	9	13	5	6	4	6	10		4	3	4
		62	13	12	8	5	8	12	4	5	4	5	9		4	3	4
		72	13	7	7	5	7	10	3	5	3	4	8		4	3	4
		105	10		5	3	4	8		4	3	4	8		4	3	4
		210	8		4	3	4	8		4	3	4	8		4	3	4

ANCHOR NOTES:

1. PANEL LENGTHS & LOADS SHOWN HERE ARE FOR ANCHOR SPACING ONLY. ALLOWABLE PANEL LENGTHS FOR SPECIFIC LOADS MUST BE LIMITED TO THOSE SHOWN IN TABLE 1, SHEET 4.
2. ENTER TABLE BASED ON THE EXISTING STRUCTURE MATERIAL, ANCHOR TYPE AND EDGE DISTANCE.
3. CHOOSE DESIGN LOAD GREATER THAN OR EQUAL TO NEGATIVE DESIGN LOAD ON BUILDING AND CHOOSE SPAN GREATER THAN OR EQUAL TO SHUTTER SPAN.
4. REFERENCE SPACING FROM APPROPRIATE CONNECTION TYPE. SEE CONNECTION DETAILS FOR IDENTIFICATION OF CONNECTION TYPE.
5. MINIMUM EMBEDMENT AND EDGE DISTANCE EXCLUDES WALL FINISH OR STUCCO.
6. WHERE LAG SCREWS FASTEN TO NARROW FACE OF STUD FRAMING, FASTENER SHALL BE LOCATED IN CENTER OF NOMINAL 2" x 4" (MIN) WOOD STUD. WOOD SHALL BE "SOUTHERN PINE" G = 0.55 OR BETTER DENSITY.
7. ANCHORS SHALL BE INSTALLED IN ACCORDANCE WITH WITH MANUFACTURERS RECOMMENDATIONS W/ MIN. EMBEDMENT INDICATED ABOVE.
8. 1/4-20 TRUSS HEAD BOLTS MAY BE USED IN LIEU OF 1/4-20 SIDEWALK BOLTS.
9. ▨ DESIGNATES ANCHOR CONDITIONS WHICH ARE NOT ACCEPTABLE USES.
10. EXISTING STRUCTURE MAY BE CONCRETE, HOLLOW BLOCK, OR WOOD FRAMING. REFERENCE ANCHOR SCHEDULE FOR PROPER ANCHOR TYPE BASED ON TYPE OF EXISTING STRUCTURE.

* REQUIRED FOR DIRECT MOUNT @ 6.5" OR 13" SPACING ONLY. SPACINGS NOT TO EXCEED VALUE SPECIFIED IN ANCHOR SCHEDULE.

PRODUCT REVISED
as complying with the Florida Buiding Code
Acceptance No 03-0423.02
Expiration Date 07/31/2008
By [signature]
Miami Dade Product Control Division

ANCHOR SCHEDULE

FASTENER SPACING (INCHES) REQUIRED FOR VARIOUS DESIGN LOADS AND SPANS/PANEL LENGTHS

3/4" EDGE DISTANCE

EXISTING STRUCTURE	ANCHOR TYPE	DESIGN LOAD (W) PSF MAX. (SEE NOTE 1)	SPANS UP TO 6'-0" (SEE NOTE 1) CONNECTION TYPE					SPANS UP TO 8'-8" (SEE NOTE 1) CONNECTION TYPE					SPANS UP TO 11'-4" (SEE NOTE 1) CONNECTION TYPE				
			1	2	3	4	5	1	2	3	4	5	1	2	3	4	5
WOOD	1-3/4" MIN. 1/4"⌀ WOOD LAG W/ 1-3/4" MIN. THREAD EMBEDMENT SHEAR PARALLEL TO WOOD GRAIN	56	13	13	10	13	10	13	10	7	9	7	13	5	5	6.5	5
		62	13	13	9	11	9	13	8	6.5	8	6.5	13	4	5	6	5
		72	13	13	8	10	8	13	5	5	7	5	13	4	4	5	4
		105	13	5	5	7	5	13	4	4	5	4	13	4	4	5	4
		210	13	4	4	5	4	13	4	4	5	4	13	4	4	5	4
	1-3/4" MIN. 1/4"⌀ WOOD LAG W/ 1-3/4" MIN. THREAD EMBEDMENT SHEAR PERPENDICULAR TO WOOD GRAIN	56	13	13	8	13	8	13	10	5	9	5	13	5	4	6.5	4
		62	13	13	7	11	7	13	8	5	8	5	13	4	4	6	4
		72	13	13	6.5	10	6.5	13	5	4	7	4	13	4	3	5	3
		105	13	5	4	7	4	13	4	3	5	3	13	4	3	5	3
		210	13	4	3	5	3	13	4	3	5	3	13	4	3	5	3
	* BRASS WOOD BUSHING W/ 7/8" MIN. EMBED.	56	13	13	7	5	7	10	3	5	3	5	7		4		4
		62	13	9	7	4	6.5	9	3	4	3	4	7		3		3
		72	11	5	6	3	5	8		4		4	6.5		3		3
		105	8		4		4	6.5		3		3	6.5		3		3
		210	6.5		3		3	6.5		3		3	6.5		3		3
	* 1/4"⌀ ELCO MALE/FEMALE "PANELMATE" W/ 1-7/8" MIN. EMBEDMENT	56	13	13	13	13	13	13	13	13	13	13	13	8	10	10	10
		62	13	13	13	13	13	13	12	11	12	11	13	7	9	9	9
		72	13	13	13	13	13	13	8	10	10	10	13	6	8	8	8
		105	13	8	10	10	10	13	6	8	8	8	13	6	8	8	8
		210	13	6	8	8	8	13	6	8	8	8	13	6	8	8	8

ANCHOR SCHEDULE

FASTENER SPACING (INCHES) REQUIRED FOR VARIOUS DESIGN LOADS AND SPANS/PANEL LENGTHS

2" EDGE DISTANCE

EXISTING STRUCTURE	ANCHOR TYPE	DESIGN LOAD (W) PSF MAX. (SEE NOTE 1)	SPANS UP TO 6'-0" (SEE NOTE 1) CONNECTION TYPE					SPANS UP TO 8'-8" (SEE NOTE 1) CONNECTION TYPE					SPANS UP TO 11'-4" (SEE NOTE 1) CONNECTION TYPE				
			1	2	3	4	5	1	2	3	4	5	1	2	3	4	5
HOLLOW CONCRETE BLOCK	1/4"⌀ ITW TAPCON W/ 1-1/4" MIN. EMBEDMENT	56	13	13	6.5	4	6.5	9	3	4	3	4	7		3		3
		62	12	8	6	4	5	8		4		4	6		3		3
		72	10	4	5	3	5	7		3		3	6		3		
		105	7		3		3	6		3			6		3		
		210	6		3			6		3			6		3		
	* 1/4"⌀ RAWL CALK-IN W/ 7/8" EMBEDMENT & 1/4-20 SIDEWALK BOLT (3/4"⌀ HEAD)	56	13	13	7	5	6.5	11	4	4	3	4	8		3		3
		62	13	10	6	5	6	10	3	4	3	4	8		3		3
		72	13	6	5	4	5	9		3	3	3	7		3		3
		105	8		3	3	3	7		3		3	7		3		3
		210	7		3		3	7		3		3	7		3		3
	* 1/4"⌀ ELCO MALE/FEMALE "PANELMATE" W/ 1-1/4" MIN. EMBED. & 1/4-20 MACHINE SCREW/NUT	56	13	13	8	6	7	13	5	5	4	5	10		4	3	4
		62	13	12	7	5	7	12	3	5	4	5	9		3	3	3
		72	13	6.5	6	4	6	10		4	3	4	8		3		3
		105	10		4	3	4	8		3		3	8		3		3
		210	8		3		3	8		3		3	8		3		3

3" EDGE DISTANCE

EXISTING STRUCTURE	ANCHOR TYPE	DESIGN LOAD (W) PSF MAX. (SEE NOTE 1)	SPANS UP TO 6'-0" (SEE NOTE 1) CONNECTION TYPE					SPANS UP TO 8'-8" (SEE NOTE 1) CONNECTION TYPE					SPANS UP TO 11'-4" (SEE NOTE 1) CONNECTION TYPE				
			1	2	3	4	5	1	2	3	4	5	1	2	3	4	5
HOLLOW CONCRETE BLOCK	1/4"⌀ ITW TAPCON W/ 1-1/4" MIN. EMBEDMENT	56	13	13	7	4	7	10	3	5	3	5	7		4		3
		62	13	9	6.5	4	6.5	9	3	4	3	4	7		3		3
		72	11	5	5	3	5	7		4		4	6.5		3		3
		105	7		4		3	6.5		3		3	6.5		3		3
		210	6.5		3		3	6.5		3		3	6.5		3		3
	* 1/4"⌀ RAWL CALK-IN W/ 7/8" EMBEDMENT & 1/4-20 SIDEWALK BOLT (3/4"⌀ HEAD)	56	13	13	10	6.5	10	13	5	7	4	7	11	3	5	3	5
		62	13	13	9	6	9	13	4	6.5	4	6	10		5	3	4
		72	13	7	8	5	7	11	3	5	3	5	9		4	3	4
		105	11	3	5	3	5	9		4	3	4	9		4	3	4
		210	9		4	3	4	9		4	3	4	9		4	3	4
	* 1/4"⌀ ELCO MALE/FEMALE "PANELMATE" W/ 1-1/4" MIN. EMBED. & 1/4-20 MACHINE SCREW/NUT	56	13	13	9	6.5	9	13	5	6	4	6	10		4	3	4
		62	13	12	8	5	8	12	4	5	4	5	9		4	3	4
		72	13	7	7	5	7	10	3	5	3	4	8		4	3	4
		105	10		5	3	4	8		4	3	4	8		4	3	4
		210	8		4	3	4	8		4	3	4	8		4	3	4

KNEZEVICH & ASSOCIATES, INC.
CONSULTING ENGINEERS • PRODUCT TESTING
1260 N. UNIVERSITY DRIVE, SUITE 180 • FORT LAUDERDALE, FL 33322
TEL: (954) 382-2800 • FAX: (954) 382-2989 • FLORIDA COA #3205
WEBSITE: WWW.KNEZEVICH.COM • E-MAIL: KA@KNEZEVICH.COM
COPYRIGHT © 2003 KNEZEVICH & ASSOCIATES, INC

20 GA. STEEL STORM PANEL

SOUTHERN METAL PRODUCTS, LLC - D.B.A. ALL BROWARD HURRICANE PANEL
450 West McNab Road
Ft. Lauderdale, FL 33309
1-800-HURRICANE

V.J. KNEZEVICH
PROFESSIONAL ENGINEER
FL License No. PE 0010983
APR 18 2003

revisions			
no	date	by	description
0	04/18/03	OLB	PREVIOUSLY DWG No. 98-128

date 04/18/2003
scale AS NOTED | drawn by AV
design by OLB | checked by VJK
drawing no. 03-269

Print Information: J:\CADD\Cadd03\All_Broward\03-269\R1-sub\03-269-05.dwg AVazquez 04/18/2003 11:19:43am
04/18/03 11:19

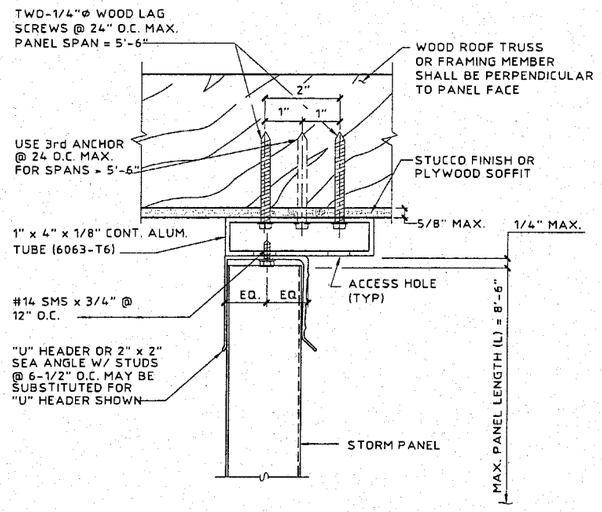

CONNECTION DETAIL (SECTION)

SCALE : 3" = 1'-0"

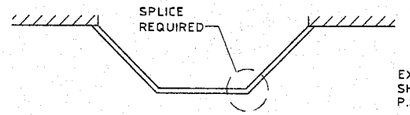

BAY WINDOW

N.T.S.

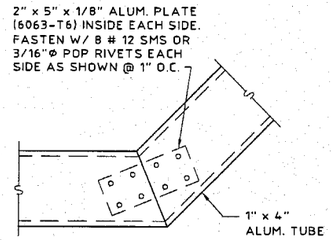

SPLICE DETAIL FOR BAY WINDOW APPLICATIONS

SCALE : 1-1/2" = 1'-0"

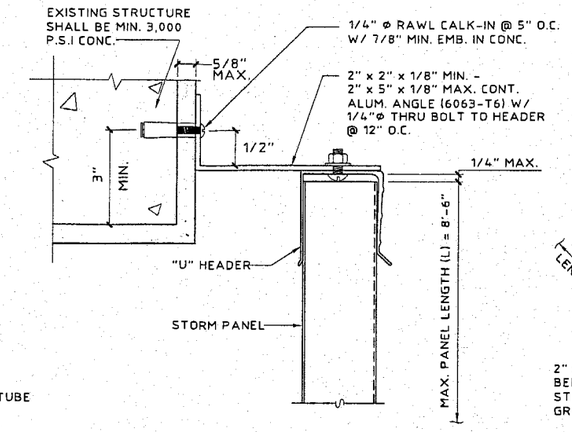

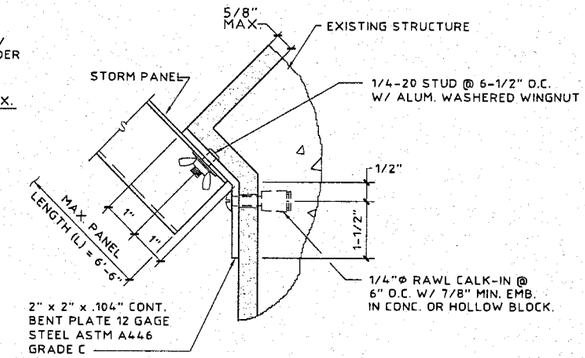

PLAN VIEW
HORIZONTAL PANEL INSTALLATION

(MAX. DESIGN LOAD ± 72 PSF)

(J) SOFFIT CONNECTION DETAIL

NOTE: FOR BAY WINDOWS, FASTEN AT A MAX. 24" SPACING. SPLICE AS SHOWN FOR CORNERS OF BAY WINDOW.

(MAX. DESIGN LOAD ± 72 PSF)

(K) ANGLE BUILD-OUT

SCALE : 3" = 1'-0"

(MAX. DESIGN LOAD ± 72 PSF)

(L) BENT PLATE CONNECTION

SCALE : 3" = 1'-0"

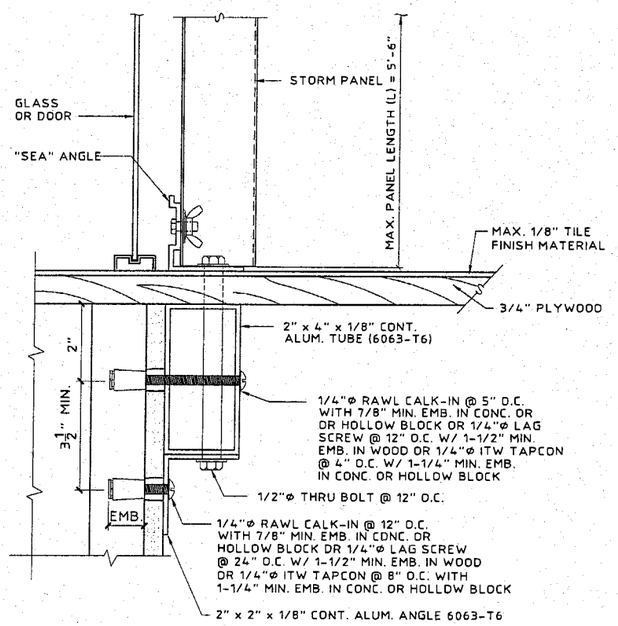

(MAX. DESIGN LOAD ± 72 PSF)

(M) "PASS THRU" DETAIL (IN CONCRETE)

SCALE : 3" = 1'-0"

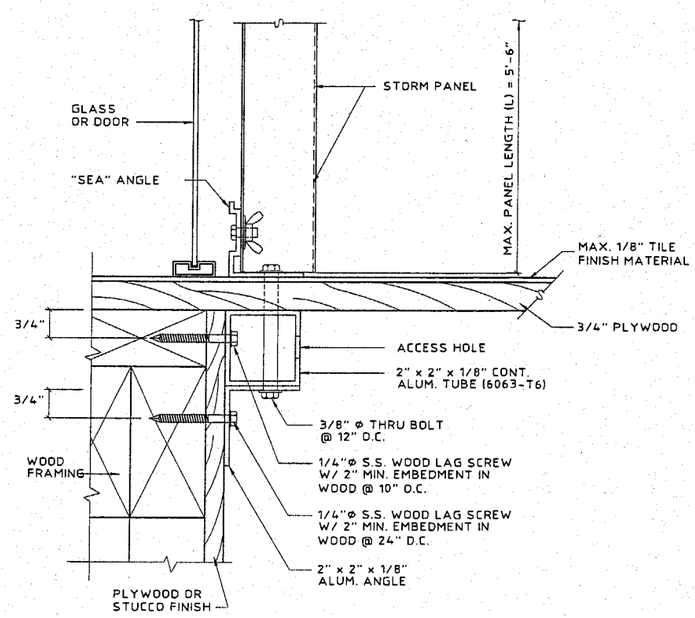

(MAX. DESIGN LOAD ± 72 PSF)

(N) "PASS THRU" DETAIL (IN WOOD)

SCALE : 3" = 1'-0"

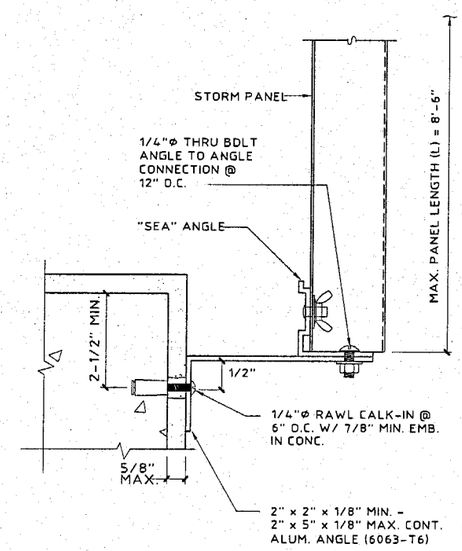

(MAX. DESIGN LOAD ± 72 PSF)

(O) ANGLE BUILD-OUT

SCALE : 3" = 1'-0"

PRODUCT REVISED
as complying with the Florida Buiding Code
Acceptance No 03-0423.02
Expiration Date 07/31/2008
By Helena A. Mola
Miami Dade Product Control Division

KNEZEVICH & ASSOCIATES, INC.
CONSULTING ENGINEERS • PRODUCT TESTING
1260 N. UNIVERSITY DRIVE, SUITE 180 • FORT LAUDERDALE, FL 33322
TEL: (954) 382-2800 • FAX: (954) 382-2989 • FLORIDA COA #3205
WEBSITE: WWW.KNEZEVICH.COM • E-MAIL: KA@KNEZEVICH.COM

COPYRIGHT © 2003 KNEZEVICH & ASSOCIATES, INC

20 GA. STEEL STORM PANEL

SOUTHERN METAL PRODUCTS, LLC - D.B.A.
ALL BROWARD HURRICANE PANEL
450 West McNab Road Ft. Lauderdale, FL 33309 1-800-HURRICANE

V.J. KNEZEVICH
PROFESSIONAL ENGINEER
FL License No: PE 0010983

APR 18 2003

revisions

no	date	by	description
0	04/18/03	DLB	PREVIOUSLY DWG No. 98-128

date 04/18/2003
scale AS NOTED
drawn by AV
design by DLB
checked by VJK
drawing no. 03-269
sheet 6 of 7

Print Information: J:\CADD\Cadd03\All_Broward\03-269\R1-sub\03-269-06.dwg AVazquez 04/18/2003 11:20:07am

04/18/03 11:20

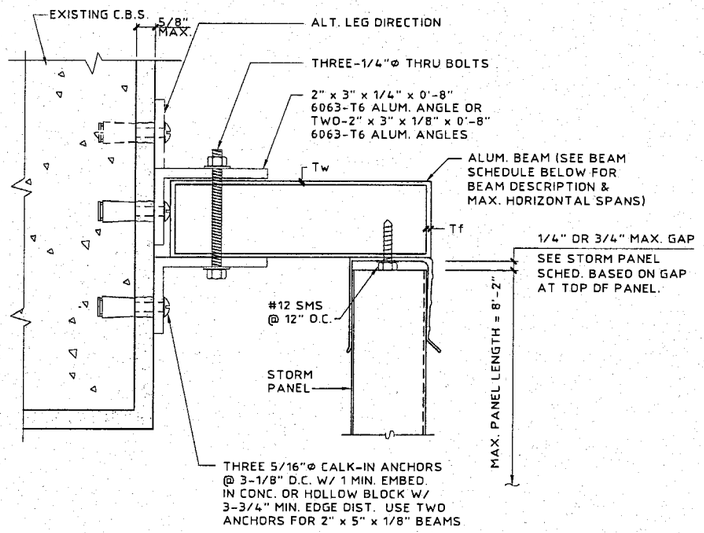

(MAX. DESIGN LOAD ± 72 PSF)

(P) STORM PANEL SUPPORT BEAM

SCALE : 3" = 1'-0"

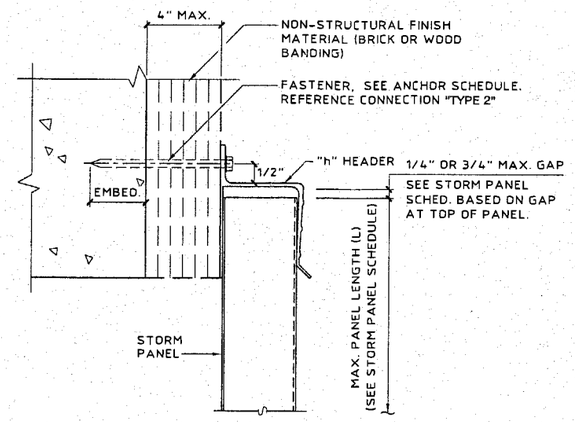

(MAX. DESIGN LOAD = ± 72 P.S.F.)

(Q) WALL MOUNT

SCALE : 3" = 1'-0"

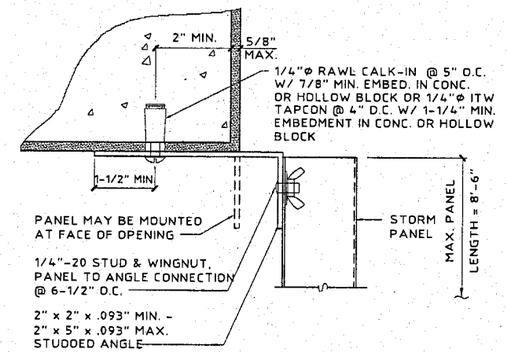

(MAX. DESIGN LOAD ± 72 PSF)

(R) TRAP MOUNT

SCALE : 3" = 1'-0"

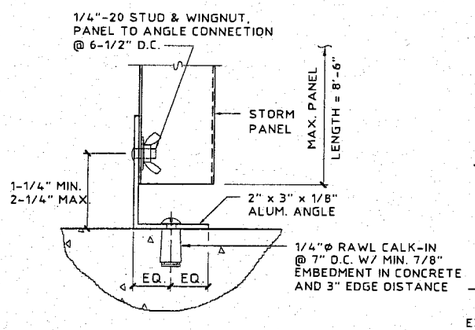

(MAX. DESIGN LOAD ± 72 PSF)

(S) TRAP MOUNT

SCALE : 3" = 1'-0"

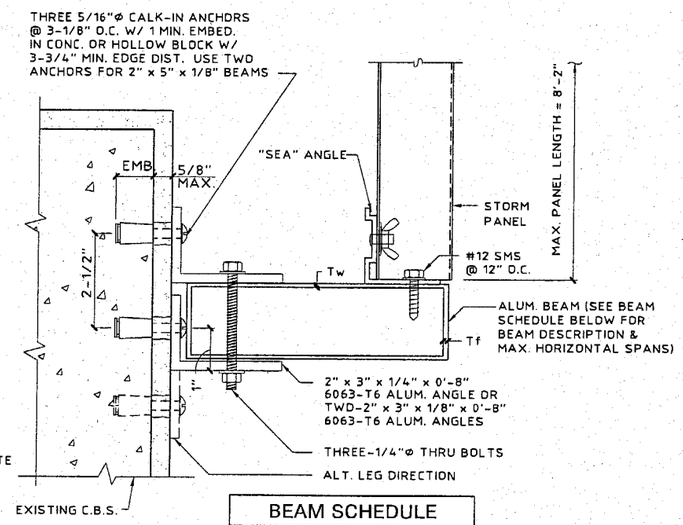

BEAM SCHEDULE		
DESCRIPTION	PANEL SPAN	BEAM SPAN
2" x 5" Tw = .125" Tf = .125"	5'-0"	9'-3"
	8'-2"	7'-11"
2" x 9" Tw = .072" Tf = .224"	5'-0"	15'-7"
	8'-2"	13'-4"

(MAX. DESIGN LOAD ± 72 PSF)

(T) STORM PANEL SUPPORT BEAM

SCALE : 3" = 1'-0"

NOTE: THIS DETAIL MAY BE USED AT TOP OR BOTTOM OF PANEL.

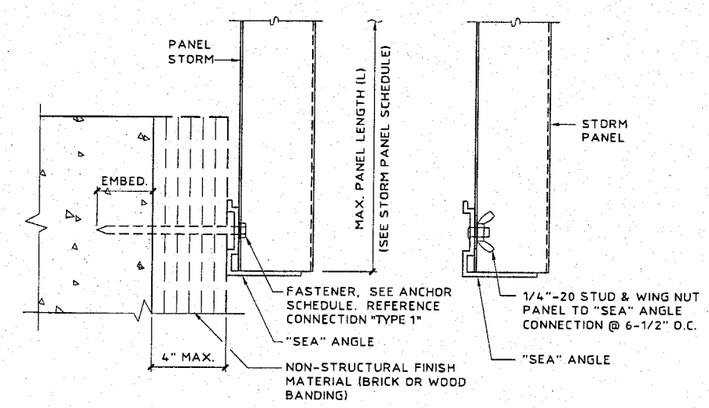

ANGLE TO WALL DETAIL

PANEL TO ANGLE DETAIL

(MAX. DESIGN LOAD = ± 72 P.S.F.)

(U) WALL MOUNT

SCALE : 3" = 1'-0"

PRODUCT REVISED
as complying with the Florida Buiding Code
Acceptance No 03-0423.02
Expiration Date 07/31/2008
By [signature]
Miami Dade Product Control Division

KNEZEVICH & ASSOCIATES, INC.
CONSULTING ENGINEERS • PRODUCT TESTING
1260 N. UNIVERSITY DRIVE, SUITE 180 • FORT LAUDERDALE, FL 33322
TEL: (954) 382-2800 • FAX: (954) 382-2989 • FLORIDA COA #3205
WEBSITE: WWW.KNEZEVICH.COM • E-MAIL: KA@KNEZEVICH.COM

COPYRIGHT © 2003 KNEZEVICH & ASSOCIATES, INC

20 GA. STEEL STORM PANEL

SOUTHERN METAL PRODUCTS, LLC - D.B.A.
450 West McNab Road
Ft. Lauderdale, FL 33309
1-800-HURRICANE
ALL BROWARD HURRICANE PANEL

V.J. KNEZEVICH
PROFESSIONAL ENGINEER
FL License No. PE 0010983

APR 18 2003

revisions

no	date	by	description
0	04/18/03	OLB	PREVIOUSLY DWG No. 98-118

date 04/18/2003
scale AS NOTED
drawn by AV
design by OLB
checked by VJK
drawing no. 03-269
sheet 7 of 7

Print Information: J:\CADD\Cadd03\All_Broward\03-269\R1-sub\03-269-07.dwg AVazquez 04/18/2003 11:22:47am

04/18/03 11:22