MIAMI-DADE

BUILDING CODE COMPLIANCE OFFICE (BCCO)
PRODUCT CONTROL DIVISION

MIAMI-DADE COUNTY, FLORIDA
METRO-DADE FLAGLER BUILDING
140 WEST FLAGLER STREET, SUITE 1603
MIAMI, FLORIDA 33130-1563
(305) 375-2901 FAX (305) 375-2908

NOTICE OF ACCEPTANCE (NOA)

Metal Sales Manufacturing Corporation
7800 State Road 60
Sellersburg, IN 47172

SCOPE:

This NOA is being issued under the applicable rules and regulations governing the use of construction materials. The documentation submitted has been reviewed by Miami-Dade County Product Control Division and accepted by the Board of Rules and Appeals (BORA) to be used in Miami Dade County and other areas where allowed by the Authority Having Jurisdiction (AHJ).

This NOA shall not be valid after the expiration date stated below. The Miami-Dade County Product Control Division (In Miami Dade County) and/or the AHJ (in areas other than Miami Dade County) reserve the right to have this product or material tested for quality assurance purposes. If this product or material fails to perform in the accepted manner, the manufacturer will incur the expense of such testing and the AHJ may immediately revoke, modify, or suspend the use of such product or material within their jurisdiction. BORA reserves the right to revoke this acceptance, if it is determined by Miami-Dade County Product Control Division that this product or material fails to meet the requirements of the applicable building code.

This product is approved as described herein, and has been designed to comply with the High Velocity Hurricane Zone of the Florida Building Code.

DESCRIPTION: Image II Metal Roofing System

LABELING: Each unit shall bear a permanent label with the manufacturer's name or logo, city, state and following statement: "Miami-Dade County Product Control Approved", unless otherwise noted herein.

RENEWAL of this NOA shall be considered after a renewal application has been filed and there has been no change in the applicable building code negatively affecting the performance of this product.

TERMINATION of this NOA will occur after the expiration date or if there has been a revision or change in the materials, use, and/or manufacture of the product or process. Misuse of this NOA as an endorsement of any product, for sales, advertising or any other purposes shall automatically terminate this NOA. Failure to comply with any section of this NOA shall be cause for termination and removal of NOA.

ADVERTISEMENT: The NOA number preceded by the words Miami-Dade County, Florida, and followed by the expiration date may be displayed in advertising literature. If any portion of the NOA is displayed, then it shall be done in its entirety.

INSPECTION: A copy of this entire NOA shall be provided to the user by the manufacturer or its distributors and shall be available for inspection at the job site at the request of the Building Official.

This consists of pages 1 through 5.
The submitted documentation was reviewed by Frank Zuloaga, RRC

ROOFING SYSTEM APPROVAL:

Category:	Roofing
Sub-Category:	Metal, Panels (Non-Structural)
Material:	Steel
Deck Type:	Wood
Maximum Design Pressure	-102.5 psf

TRADE NAMES OF PRODUCTS MANUFACTURED OR LABELED BY APPLICANT:

Product	Dimensions	Test Specifications	Product Description
Image II Metal Roof	l = varies' w = 12" & 16" h = 1" min. Thickness 0.019 inch	TAS 110	Corrosion resistant, galvanized, preformed, coated, prefinished, metal panels.
Trim Pieces	l = varies w = varies min. Thickness 0.019 inch.	TAS 110	Standard flashing and trim pieces. Manufactured for each panel width.

EVIDENCE SUBMITTED:

Test Agency	Test Identifier	Test Name/Report	Date
Akzo Coatings		ASTM G 23 ASTM B 117	
Valspar Corporation		ASTM G 23 ASTM B 117	
Architectural Testing	01-43798.01	TAS 100	03/05/03
Farabaugh Engineer & Testing, Inc.	T123-03	TAS 125	03/05/03

APPROVED ASSEMBLIES:

SYSTEM A: IMAGE II Metal Roof Panel

Deck Type: Wood, Non-insulated

Deck Description: New Construction or Re-roof
$^{19}/_{32}$" or greater plywood or wood plank.

Maximum Uplift Pressure: The maximum allowable design pressure for the IMAGE II metal panel shall be **–102.5** psf

Deck Attachment: In accordance with applicable Building Code, but in no case shall it be less than #8 x 2" wood screws spaced 6" o.c. In reroofing, where the deck is less than $^{19}/_{32}$" thick (Minimum $^{15}/_{32}$") the above attachment method must be in addition to existing attachment. **Wood sheathing shall be sealed at all joints with a continuous bead of urethane sealant**.

Underlayment: Minimum underlayment shall be an ASTM D 226 Type II installed with a minimum 4" side-lap and 6" end-laps. Underlayment shall be fastened with corrosion resistant tin-caps and 12 gauge 1 ¼" annular ring-shank nails, spaced 6" o.c. at all laps and two staggered rows 12" o.c. in the field of the roll. Or, any approved underlayment having a current NOA.

Valleys: Valley construction shall be in compliance with Roofing Application Standard RAS 133 and with Metal Sales Manufacturing Corporation's current published installation instructions.

Fire Barrier Board: Any approved fire barrier having a current NOA. Or for class A or B fire rating, install minimum ¼" thick Georgia Pacific "Dens Deck" (with current NOA) or minimum 4mm thick of Tritex, RockRoof (with current NOA) or $^{5}/_{8}$" water resistant type X gypsum sheathing with treated core and facer.

Metal Panels and Accessories: Install the "IMAGE II Panels" and accessories in compliance with Metal Sales Manufacturing Corporation's current, published installation instructions and details. Flashing, penetrations, valley construction and other details shall be constructed in compliance with the minimum requirements provided in Roofing Application Standards RAS 133.
Panels shall be fastened to substrate at the male end with one corrosion resistant #8 screw of sufficient length (but not less than 1") to penetrate through the sheathing a minimum of $^{3}/_{16}$", at a spacing not exceed 12" o.c. parallel to the slope of the roof. (See detail herein)

SYSTEM LIMITATIONS

1. Increased design pressures for at perimeter and corner areas, in compliance with applicable building code may be met through rational analysis by increasing the number of attachment points in this areas. The maximum fastener spacing noted in the "Systems Description" section of this approval shall not be exceeded. All rational analysis computation shall be prepared, signed and sealed by a Florida Registered Professional Engineer, Registered Architect, or Registered Roof Consultant.

2. Panel shall be roll formed in continuous lengths from eave to ridge. Maximum lengths shall be described in the Roofing Application Standard RAS 133.

3. All panels shall be permanently labeled with the manufacturer's name and/or logo, and the following statement: "Miami-Dade County Product Control Approved."

PROFILE DRAWING:

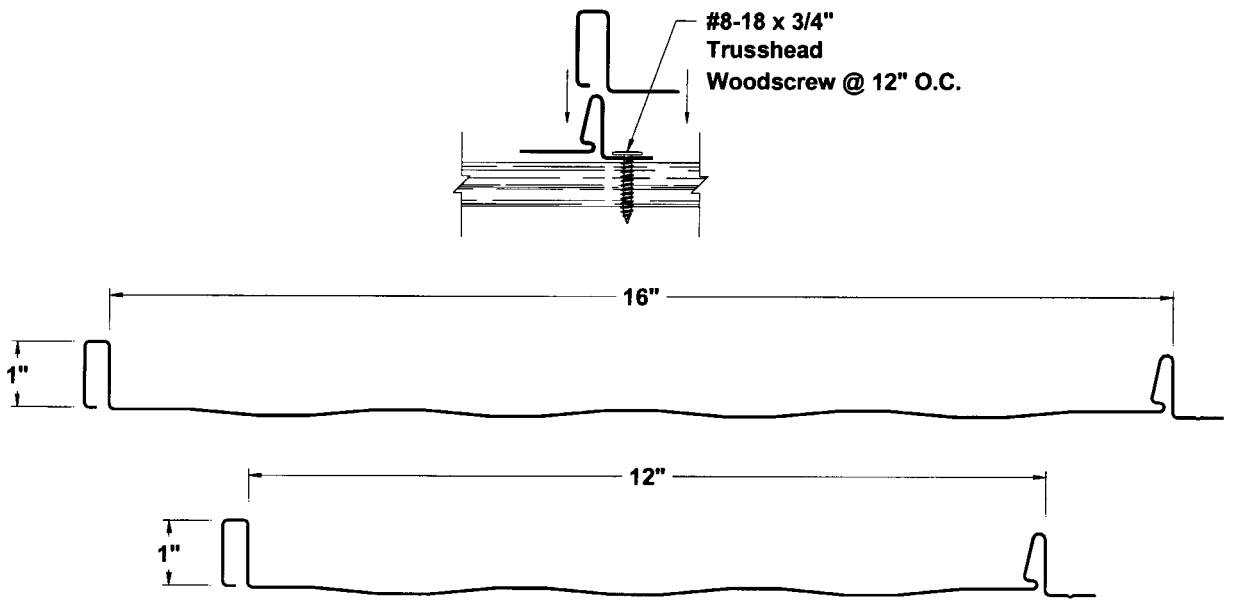

PROFILE DRAWING (CONT'D):

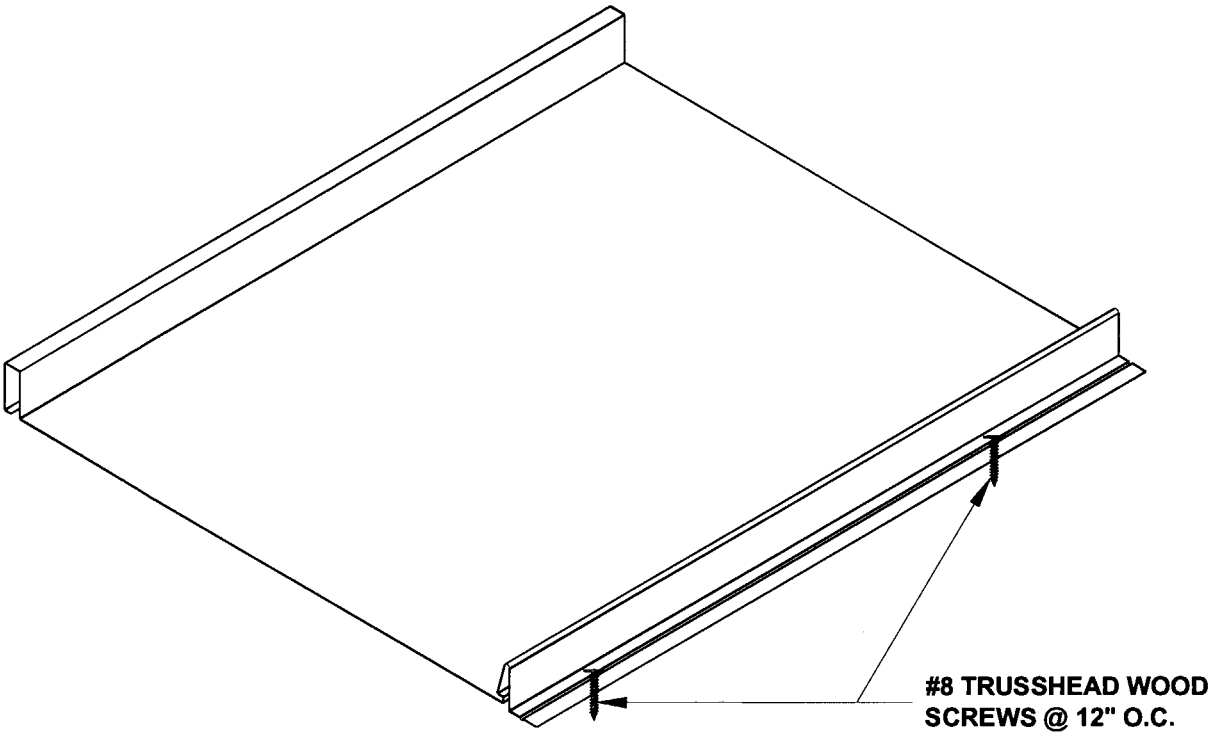

IMAGE II METAL ROOF PANEL

END OF THIS ACCEPTANCE