MIAMI-DADE

BUILDING CODE COMPLIANCE OFFICE (BCCO)
PRODUCT CONTROL DIVISION

MIAMI-DADE COUNTY, FLORIDA
METRO-DADE FLAGLER BUILDING
140 WEST FLAGLER STREET, SUITE 1603
MIAMI, FLORIDA 33130-1563
(305) 375-2901 FAX (305) 375-2908

NOTICE OF ACCEPTANCE (NOA)

PGT Industries
1070 Technology Drive
Nokomis, FL 34275

SCOPE:

This NOA is being issued under the applicable rules and regulations governing the use of construction materials. The documentation submitted has been reviewed by Miami-Dade County Product Control Division and accepted by the Board of Rules and Appeals (BORA) to be used in Miami Dade County and other areas where allowed by the Authority Having Jurisdiction (AHJ).

This NOA shall not be valid after the expiration date stated below. The Miami-Dade County Product Control Division (In Miami Dade County) and/or the AHJ (in areas other than Miami Dade County) reserve the right to have this product or material tested for quality assurance purposes. If this product or material fails to perform in the accepted manner, the manufacturer will incur the expense of such testing and the AHJ may immediately revoke, modify, or suspend the use of such product or material within their jurisdiction. BORA reserves the right to revoke this acceptance, if it is determined by Miami-Dade County Product Control Division that this product or material fails to meet the requirements of the applicable building code.

This product is approved as described herein, and has been designed to comply with the High Velocity Hurricane Zone of the Florida Building Code.

DESCRIPTION: Series "820" Aluminum Picture Window-L.M.

APPROVAL DOCUMENT: Drawing No. **4246-6,** titled "Mid –Rise Alum. Picture Window (LG. Missile)", sheets 1 through 6 of 6, prepared by manufacturer, dated 4/16/03, signed and sealed by Robert L. Clark, P.E., bearing the Miami-Dade County Product Control Approval stamp with the Notice of Acceptance number and approval date by the Miami-Dade County Product Control Division.

MISSILE IMPACT RATING: Large and Small Missile Impact

LABELING: Each unit shall bear a permanent label with the manufacturer's name or logo, city, state and following statement: "Miami-Dade County Product Control Approved", unless otherwise noted herein.

RENEWAL of this NOA shall be considered after a renewal application has been filed and there has been no change in the applicable building code negatively affecting the performance of this product.

TERMINATION of this NOA will occur after the expiration date or if there has been a revision or change in the materials, use, and/or manufacture of the product or process. Misuse of this NOA as an endorsement of any product, for sales, advertising or any other purposes shall automatically terminate this NOA. Failure to comply with any section of this NOA shall be cause for termination and removal of NOA.

ADVERTISEMENT: The NOA number preceded by the words Miami-Dade County, Florida, and followed by the expiration date may be displayed in advertising literature. If any portion of the NOA is displayed, then it shall be done in its entirety.

INSPECTION: A copy of this entire NOA shall be provided to the user by the manufacturer or its distributors and shall be available for inspection at the job site at the request of the Building Official.
This NOA consists of this page 1 as well as approval document mentioned above.
The submitted documentation was reviewed by **Theodore Berman, P.E.**

7/3/2003

PRODUCT CONTROL ACCEPTED

NOA No 03-0508.03
Expiration Date: July 24, 2008
Approval Date: July 24, 2003
Page 1

PGT Industries

NOTICE OF ACCEPTANCE: EVIDENCE SUBMITTED
(For File ONLY. Not part of NOA)

A. DRAWINGS

1. Manufacturer's die drawings and sections.
2. Drawing No. **4246-6,** titled "Mid –Rise Alum. Picture Window (LG. Missile)", sheets 1 through 6 of 6, prepared by manufacturer, dated 4/16/03, signed and sealed by Robert L. Clark, P.E.

B. TESTS

1. Test reports on 1) Uniform Static Air Pressure Test, Loading per FBC, TAS 202-94 along with marked-up drawings and installation diagram of an aluminum picture window, prepared by Fenestration Testing Laboratory, Inc., Test Report No. FTL-03022, dated 4/1/03, signed and sealed by Joseph Chan, P.E.
2. Test reports on 1) Air Infiltration Test, per FBC, TAS 202-94
   2) Uniform Static Air Pressure Test, Loading per FBC, TAS 202-94
   3) Water Resistance Test, per FBC, TAS 202-94
   4) Forced Entry Test, per FBC 2411 3.2.1 and TAS 202-94
   along with marked-up drawings and installation diagram of an aluminum picture window, prepared by Fenestration Testing Laboratory, Inc., Test Report No. FTL-03024, dated 4/1/03, signed and sealed by Joseph Chan, P.E.
3. Test reports on 1) Uniform Static Air Pressure Test, Loading per FBC, TAS 202-94
   2) Large Missile Impact Test per FBC, TAS 201-94
   3) Cyclic Wind Pressure Loading per FBC, TAS 203-94
   along with marked-up drawings and installation diagram of an aluminum picture window, prepared by Fenestration Testing Laboratory, Inc., Test Report No. FTL-02094, dated 8/9/02, signed and sealed by Joseph Chan, P.E.
4. Test reports on 1) Uniform Static Air Pressure Test, Loading per FBC, TAS 202-94
   2) Large Missile Impact Test per FBC, TAS 201-94
   3) Cyclic Wind Pressure Loading per FBC, TAS 203-94
   along with marked-up drawings and installation diagram of an aluminum picture window, prepared by Fenestration Testing Laboratory, Inc., Test Report No. FTL-02092, dated 8/9/02, signed and sealed by Joseph Chan, P.E.

C. CALCULATIONS

1. Anchor Calculations and structural analysis, prepared by manufacturer, dated 5/6/03, signed and sealed by Robert L. Clark, P.E.

Theodore Berman, P.E.
Deputy Director, Product Control Division
NOA No 03-0508.03
Expiration Date: July 24, 2008
Approval Date: July 24, 2003

PGT Industries

D. MATERIAL CERTIFICATIONS

1. Notice of Acceptance No. **01-1204.01** issued to E.I. DuPont DeNemours for "Sentry Glass Plus" dated 1/17/02, expiring on 1/14/07.
2. Notice of Acceptance No. **01-0205.02**issued to Solutia, Inc. for "Saflex / Keepsafe Maximum" dated 5/17/01, expiring on 5/21/06.

PGT Industries

NOTICE OF ACCEPTANCE: EVIDENCE SUBMITTED
(For File ONLY. Not part of NOA)

E. STATEMENTS

1. Statement letter of conformance, dated 5/5/03, signed and sealed by Robert L. Clark, P.E.
2. Statement letter of no financial interest, dated 5/5/03, signed and sealed by Robert L. Clark, P.E.
3. Laboratory compliance letter for Test Report no. **FTL-02095**, issued by Fenestration Testing Laboratory, Inc., dated 8/26/02, signed and sealed by Joseph Chan, P.E.
4. Laboratory compliance letter for Test Report no. **FTL-03024**, issued by Fenestration Testing Laboratory, Inc., dated 4/28/03, signed and sealed by Joseph Chan, P.E.
5. Laboratory compliance letter for Test Report no. **FTL-03022**, issued by Fenestration Testing Laboratory, Inc., dated 4/28/03, signed and sealed by Joseph Chan, P.E.
6. Laboratory compliance letter for Test Report no. **FTL-02094**, issued by Fenestration Testing Laboratory, Inc., dated 4/26/03, signed and sealed by Joseph Chan, P.E.

F. OTHER

1. Letter from the consultant stating that the product is in compliance with the Florida Building Code (FBC).

Theodore Berman, P.E.
Deputy Director, Product Control Division
NOA No 03-0508.03
Expiration Date: July 24, 2008
Approval Date: July 24, 2003

LARGE MISSILE IMPACT PICTURE WINDOW

1. GLAZING OPTIONS:
   A. 9/16" LAMINATED GLASS CONSISTING OF (2) LITES OF 1/4" HEAT STRENGTHENED GLASS WITH A .090 SGP INNER LAYER OF DUPONT SENTRY GLASS PLUS.
   B. 7/16" LAMINATED GLASS CONSISTING OF (2) LITES OF 3/16" HEAT STRENGTHENED GLASS WITH A .090 PVB INNER LAYER OF DUPONT BUTACITE PVB OR SAFLEX/KEEPSAFE MAXIMUM.
2. DESIGN PRESSURE RATING: SEE TABLES 1 AND 2
   A. NEGATIVE DESIGN LOADS BASED ON TESTED PRESSURE AND GLASS TABLE ASTM E 1300-98 (AND ASTM E 1300-94 OUTSIDE DADE COUNTY).
   B. POSITIVE DESIGN LOADS BASED ON WATER TEST PRESSURE AND GLASS TABLE ASTM E 1300-98 (AND ASTM E 1300-94 OUTSIDE DADE COUNTY).
3. ANCHORAGE: SINGLE ROW OF FASTENERS LOCATED AS FOLLOWS AND PER SHEET 6
   HEAD & SILL
   MAX. 6" FROM CORNERS
   MAX. 12" O.C.
   JAMBS
   MAX. 6" FROM CORNERS
   MAX. 12" O.C.
   (ANCHORING WITH #12 SCREWS OR 3/16" TAPCONS AT SAME LOCATIONS LIMITS PRESSURE RATING, SEE TABLE 1).
4. SHUTTER REQUIREMENT: SHUTTERS ARE NOT REQUIRED
5. NARROW JOINT SEALANT IS USED ON ALL 4 CORNERS OF THE FRAME AND ON THE OUTSIDE OF THE FRAME TO SEAL EXPOSED SCREWS.
6. MAX. WINDOW AREA (DIMENSIONS NOT TO EXCEED 96"W x 48"H OR 48"W x 96"H) = 32 SQ. FT. W/ DAYLIGHT OPENING AREA = 27.88 SQ. FT.
7. REFERENCE TEST REPORTS: FTL-3537, FTL-3539, FTL-3765, & FTL-3767

DESIGN PRESSURE RATING -TABLE 1. FTL-3539 & FTL-3765
GLASS OPTION A. 9/16" LAMINATED GLASS

	HEIGHT			
ALL WIDTHS	41.000	43.000	44.500	48.000
1/4" TAPCONS	-110.0	-110.0	-110.0	-110.0
	90.0	90.0	90.0	90.0
3/16" TAPCONS OR #12 SCREWS	-110.0	-104.4	-100.9	-93.5
	90.0	90.0	90.0	90.0

DESIGN PRESSURE RATING -TABLE 2. FTL-3537 & FTL-3767
COMPARATIVE ANALYSIS FOR: GLASS OPTION B. 7/16" LAMINATED GLASS

	HEIGHT			
WIDTHS	47.500	48.000	48.500	49.000
93.000	-80.0	-80.0	-80.0	-80.0
	65.0	65.0	65.0	65.0
94.000	-80.0	-80.0	-80.0	-79.7
	65.0	65.0	65.0	65.0
95.000	-80.0	-80.0	-79.9	-78.9
	65.0	65.0	65.0	65.0
96.000	-80.0	-80.0	-79.1	-77.8
	65.0	65.0	65.0	65.0

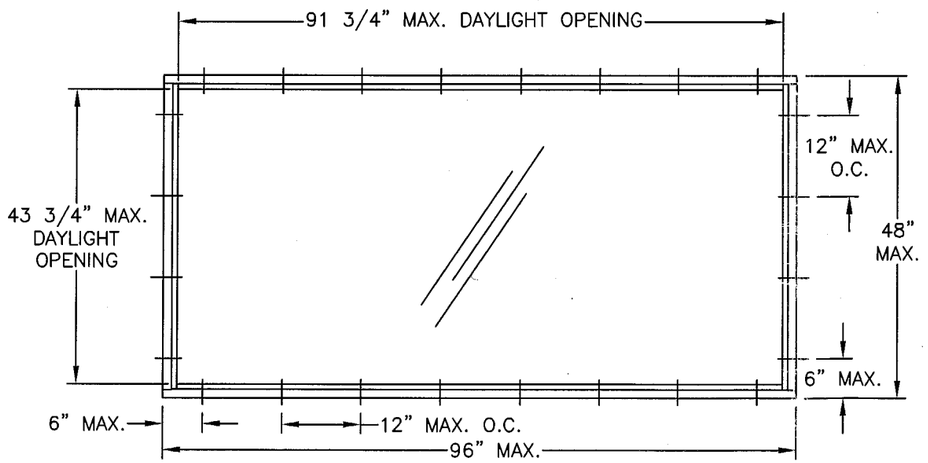

ELEVATION

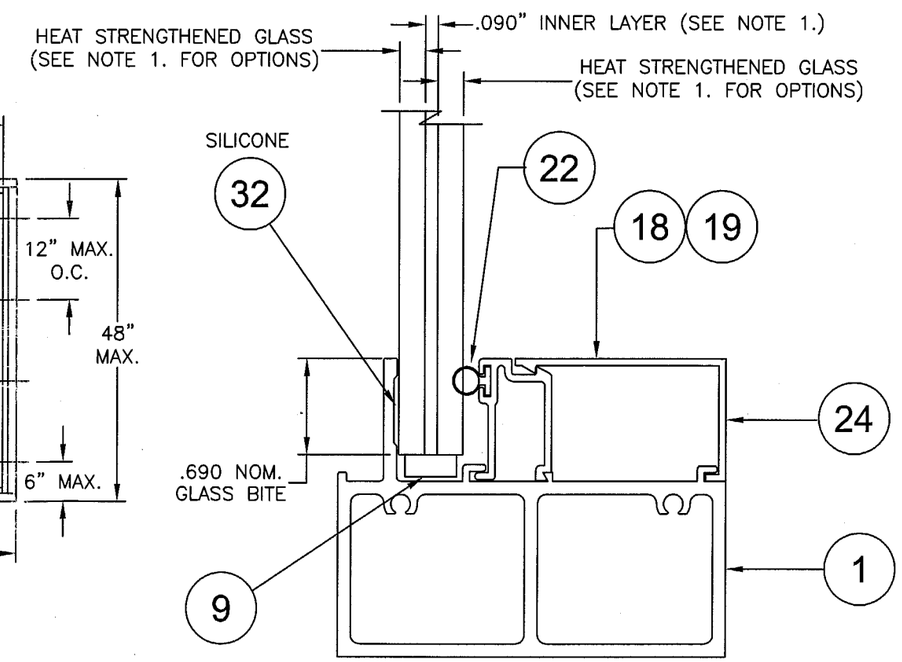

GLAZING DETAIL

Approved as complying with the Florida Building Code
Date 07/24/03
NOA# 03-0508.03
Miami Dade Product Control Division
By: Glendore Gaiman

5/4/03

Robert L. Clark, P.E.
PE #39712
Structural

Revsd By:	Date:	Revisions:	
Revsd By:	Date:	Revisions:	
Revsd By:	Date:	Revisions:	
Drawn By: F.K.	Date: 4/16/03	Checked By:	Date:

1070 TECHNOLOGY DRIVE
NOKOMIS, FL 34275

P.O. BOX 1529
NOKOMIS, FL 34274

PGT
Visibly Better

Description: ELEVATION, GLAZING & NOTES (EQUAL LEG)

Title: MID-RISE ALUM. PICTURE WINDOW (LG. MISSILE)

Series/Model:	Scale:	Sheet:	Drawing No.	Rev:
PW-820	NTS	1 of 6	4246-6	

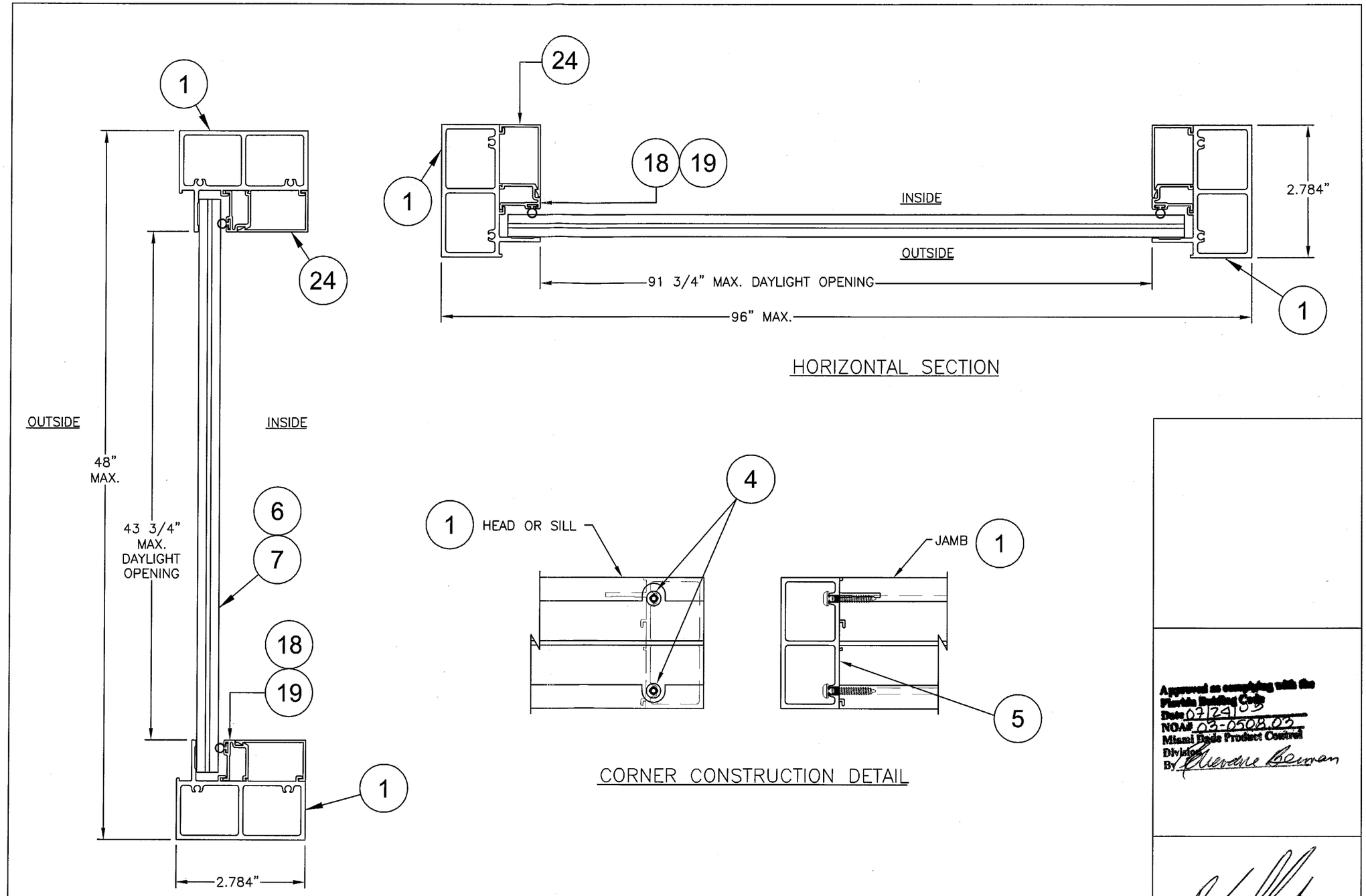

Approved as complying with the Florida Building Code
Date 07/24/03
NOA# 03-0508.03
Miami Dade Product Control Division
By Lievane Berman

5/4/03

Robert L. Clark, P.E.
PE #39712
Structural

Revsd By:	Date:	Revisions:	
Revsd By:	Date:	Revisions:	
Revsd By:	Date:	Revisions:	
Drawn By: F.K.	Date: 4/16/03	Checked By:	Date:

1070 TECHNOLOGY DRIVE
NOKOMIS, FL 34275

P.O. BOX 1529
NOKOMIS, FL 34274

PGT
Visibly Better

Description: SECTIONS & CORNER ASSEMBLY (EQUAL LEG)

Title: MID-RISE ALUM. PICTURE WINDOW (LG. MISSILE)

Series/Model:	Scale:	Sheet:	Drawing No.	Rev:
PW-820	NTS	2 of 6	4246-6	

LARGE MISSILE IMPACT PICTURE WINDOW

1. GLAZING OPTIONS:
   A. 9/16" LAMINATED GLASS CONSISTING OF (2) LITES OF 1/4" HEAT STRENGTHENED GLASS WITH A .090 SGP INNER LAYER OF DUPONT SENTRY GLASS PLUS.
   B. 7/16" LAMINATED GLASS CONSISTING OF (2) LITES OF 3/16" HEAT STRENGTHENED GLASS WITH A .090 PVB INNER LAYER OF DUPONT BUTACITE PVB OR SAFLEX/KEEPSAFE MAXIMUM.
2. DESIGN PRESSURE RATING: SEE TABLES 3 AND 4
   A. NEGATIVE DESIGN LOADS BASED ON TESTED PRESSURE AND GLASS TABLE ASTM E 1300-98 (AND ASTM E 1300-94 OUTSIDE DADE COUNTY).
   B. POSITIVE DESIGN LOADS BASED ON WATER TEST PRESSURE AND GLASS TABLE ASTM E 1300-98 (AND ASTM E 1300-94 OUTSIDE DADE COUNTY).
3. ANCHORAGE: SINGLE ROW OF FASTENERS LOCATED AS FOLLOWS AND PER SHEET 6
   HEAD & SILL
   MAX. 6 1/2" FROM CORNERS
   MAX. 12" O.C.
   JAMBS
   MAX. 6 1/2" FROM CORNERS
   MAX. 12" O.C.
   (ANCHORING WITH #12 SCREWS OR 3/16" TAPCONS AT SAME LOCATIONS LIMITS PRESSURE RATING, SEE TABLE 3).
4. SHUTTER REQUIREMENT: SHUTTERS ARE NOT REQUIRED
5. NARROW JOINT SEALANT IS USED ON ALL 4 CORNERS OF THE FRAME AND ON THE OUTSIDE OF THE FRAME TO SEAL EXPOSED SCREWS.
6. MAX. "TIP TO TIP" WINDOW AREA (DIMENSIONS NOT TO EXCEED 97"W x 49"H OR 49"W x 97"H)= 33 SQ. FT. W/ DAYLIGHT OPENING AREA = 27.88 SQ. FT.
7. REFERENCE TEST REPORTS: FTL-3537, FTL-3539 & FTL-3767

DESIGN PRESSURE RATING -TABLE 3. FTL-3539 & FTL-3767
GLASS OPTION A. 9/16" LAMINATED GLASS

	HEIGHT			
ALL WIDTHS	41.000	43.000	44.500	49.000
1/4" TAPCONS	-110.0	-110.0	-110.0	-110.0
	90.0	90.0	90.0	90.0
3/16" TAPCONS OR #12 SCREWS	-110.0	-104.4	-100.9	-91.6
	90.0	90.0	90.0	90.0

DESIGN PRESSURE RATING -TABLE 4. FTL-3537 & FTL-3767
COMPARATIVE ANALYSIS FOR: GLASS OPTION B. 7/16" LAMINATED GLASS

	HEIGHT			
WIDTHS	47.500	48.000	48.500	49.000
94.000	-80.0	-80.0	-80.0	-80.0
	65.0	65.0	65.0	65.0
95.000	-80.0	-80.0	-80.0	-79.7
	65.0	65.0	65.0	65.0
96.000	-80.0	-80.0	-79.9	-78.9
	65.0	65.0	65.0	65.0
97.000	-80.0	-80.0	-79.1	-77.8
	65.0	65.0	65.0	65.0

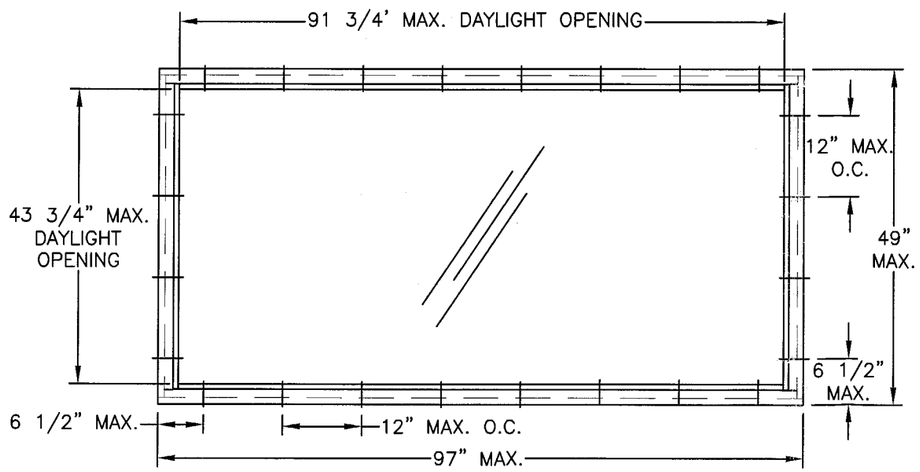

ELEVATION

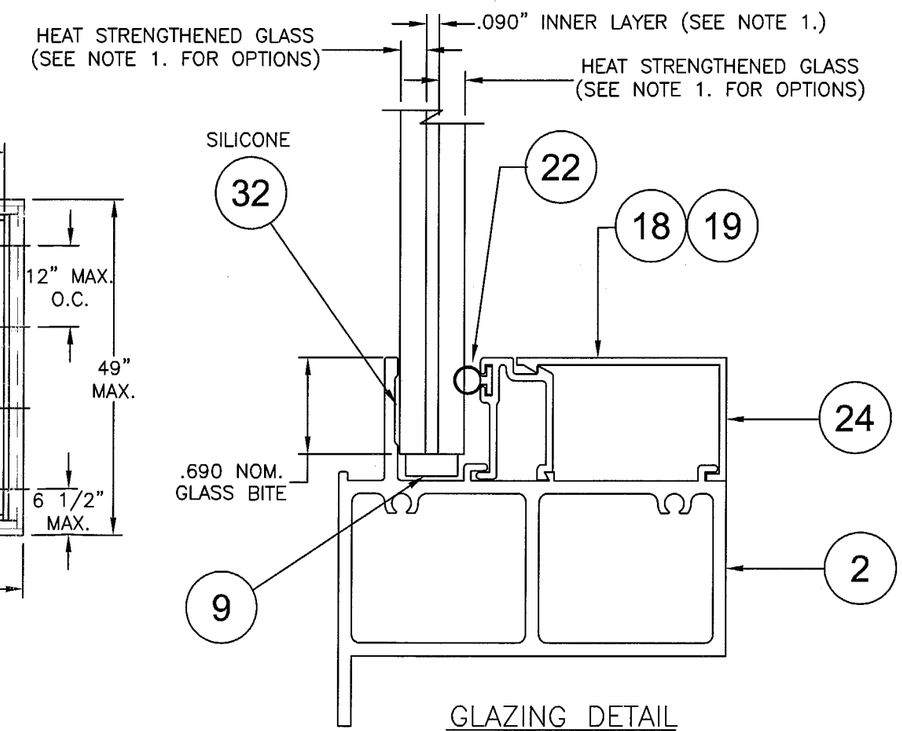

GLAZING DETAIL

Approved as complying with the Florida Building Code
Date 03/24/03
NOA# 03-0508.03
Miami Dade Product Control Division
By

R L Clark
3/4/03

Robert L. Clark, P.E.
PE #39712
Structural

Revsd By:	Date:	Revisions:	
Revsd By:	Date:	Revisions:	
Revsd By:	Date:	Revisions:	
Drawn By: F.K.	Date: 4/16/03	Checked By:	Date:

1070 TECHNOLOGY DRIVE
NOKOMIS, FL 34275

P.O. BOX 1529
NOKOMIS, FL 34274

PGT Visibly Better

Description: ELEVATION, GLAZING & NOTES (FLANGED)

Title: MID-RISE ALUM. PICTURE WINDOW (LG. MISSILE)

Series/Model:	Scale:	Sheet:	Drawing No.	Rev:
PW-820	NTS	3 of 6	4246-6	

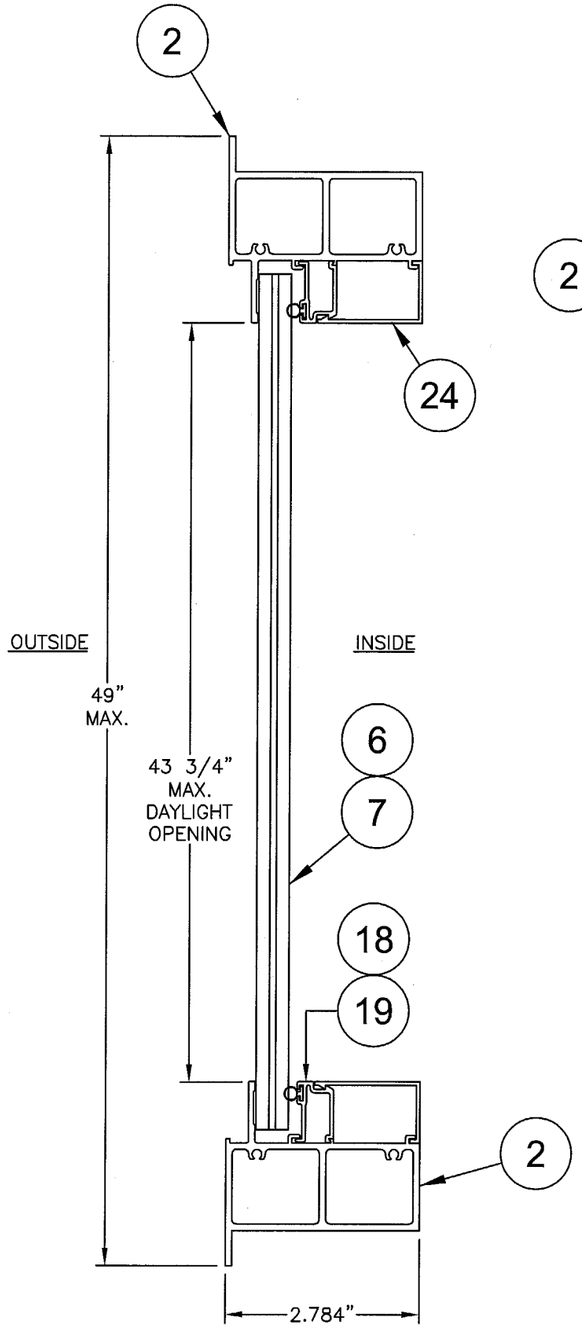

VERTICAL SECTION

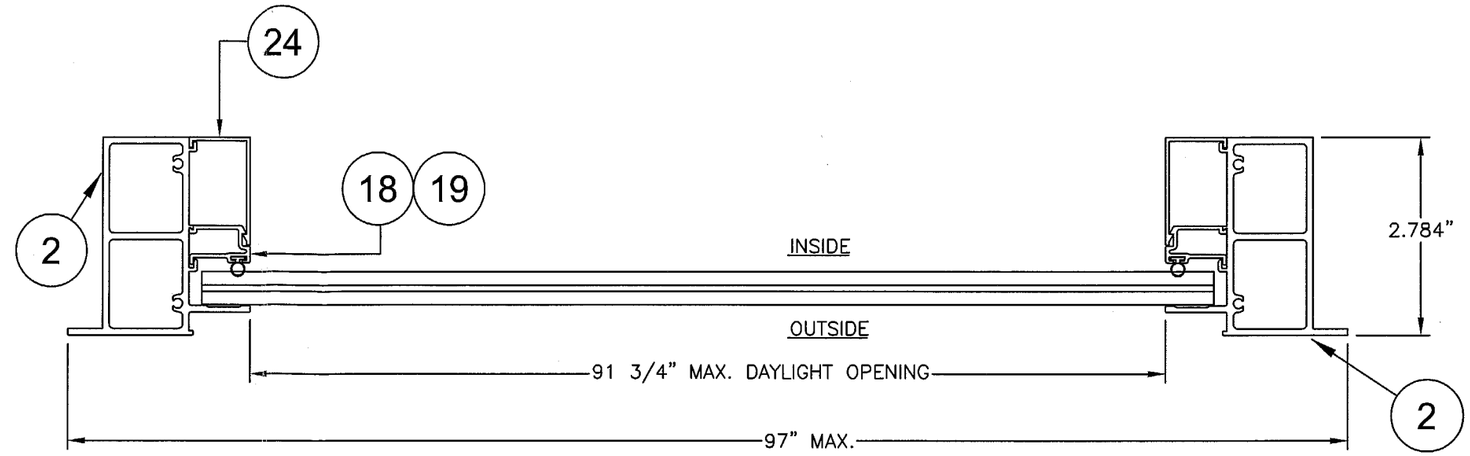

HORIZONTAL SECTION

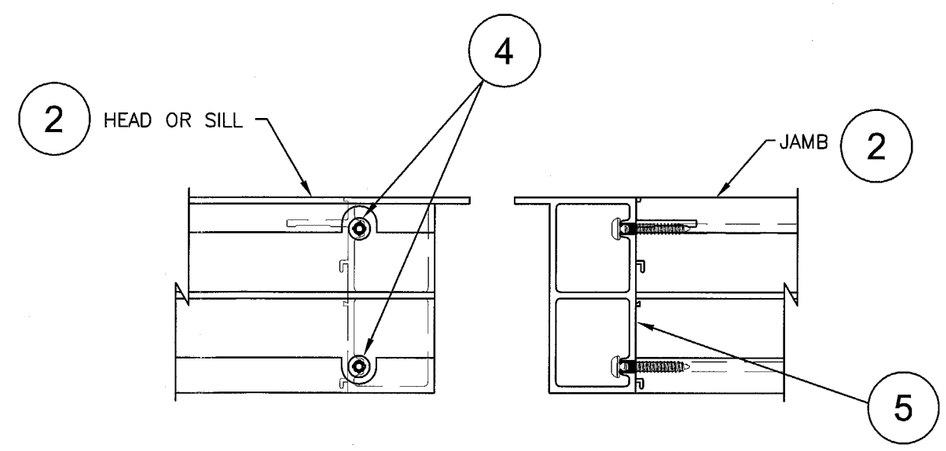

CORNER CONSTRUCTION DETAIL

Approved as complying with the Florida Building Code
Date 07/29/03
NOA# 03-0508.03
Miami Dade Product Control Division
By

S/4/03

Robert L. Clark, P.E.
PE #39712
Structural

Revsd By:	Date:	Revisions:	
Revsd By:	Date:	Revisions:	
Revsd By:	Date:	Revisions:	
Drawn By: F.K.	Date: 4/16/03	Checked By:	Date:

1070 TECHNOLOGY DRIVE
NOKOMIS, FL 34275

P.O. BOX 1529
NOKOMIS, FL 34274

PGT
Visibly Better

Description: SECTIONS & CORNER ASSEMBLY (FLANGED)

Title: MID-RISE ALUM. PICTURE WINDOW (LG. MISSILE)

Series/Model:	Scale:	Sheet:	Drawing No.	Rev:
PW-820	NTS	4 of 6	4246-6	

Item	Dwg #	PGT. #	Description
1	4238B	64238	Frame, Inside Mount Equal Leg
2	4239B	64239	Frame, Inside Mount Flanged
4	1155	781PQX	#8 x 1 Quad Pn SMS Stainless Steel
5			Schnee-Morehead SM5504 Acryl-R narrow joint sealant
6		9/16 Laminated	Glass - 1/4" Heat Strengthened
		Inner Layer:	DuPont Sentry Glass Plus
7		7/16 Laminated	Glass - 3/16 Tempered, .090 Inner Layer, 3/16" Tempered
		Inner Layer Options:	DuPont Butacite PVB Saflex/Keepsafe Maximum
9	1265-4	712654K	Setting Block - 5/32" x 3/8" x 2" long
18	4251	64251	7/16 Glazing Bead
19	4252	64252	9/16 Glazing Bead
22	1224	6TP247	Vinyl Bulb Weatherstrip (Thick)
24	4247	64247	Trim Cover
32		Silicone	Dow Corning 899 or 995

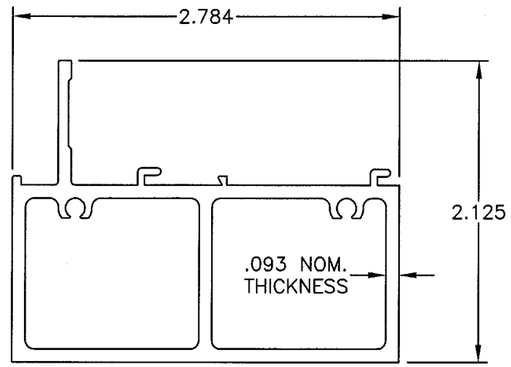

INSIDE MOUNT EQUAL LEG FRAME

1

MAT'L: 6063-T5
DWG #4238B

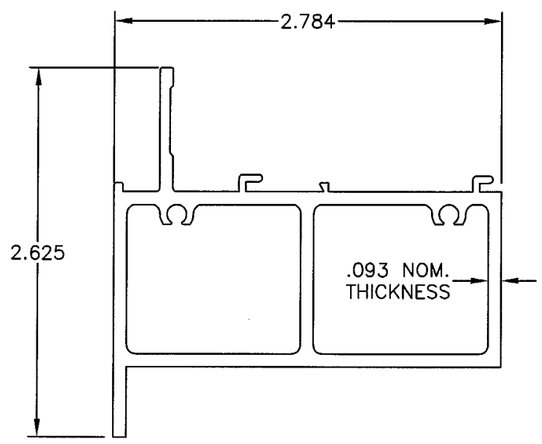

INSIDE MOUNT FLANGED

2

MAT'L: 6063-T5
DWG #4239B

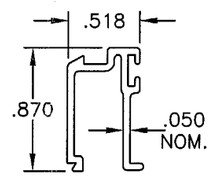

7/16 GLAZING BEAD

18

MAT'L: 6063-T5
DWG #4251

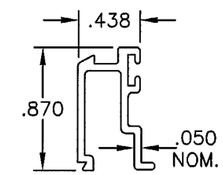

9/16 GLAZING BEAD

19

MAT'L: 6063-T5
DWG #4252

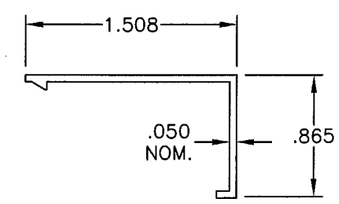

TRIM COVER

24

MAT'L: 6063-T5
DWG #4247

Approved as complying with the Florida Building Code
Date 07/24/03
NOA# 03-0508.03
Miami Dade Product Control Division
By: Theodore Berman

5/4/03

Robert L. Clark, P.E.
PE #39712
Structural

Revsd By:	Date:	Revisions:	
Revsd By:	Date:	Revisions:	
Revsd By:	Date:	Revisions:	
Drawn By: F.K.	Date: 4/16/03	Checked By:	Date:

1070 TECHNOLOGY DRIVE
NOKOMIS, FL 34275

P.O. BOX 1529
NOKOMIS, FL 34274

PGT
Visibly Better

Description: EXTRUSIONS & PARTS LIST

Title: MID-RISE ALUM. PICTURE WINDOW (LG. MISSILE)

Series/Model:	Scale:	Sheet:	Drawing No.	Rev:
PW-820	NTS	5 of 6	4246-6	

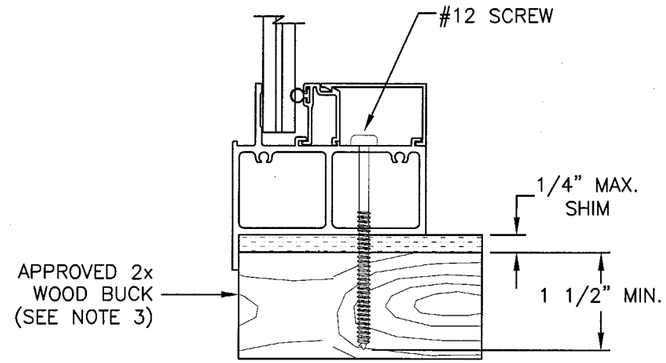

FLANGED TO WOOD

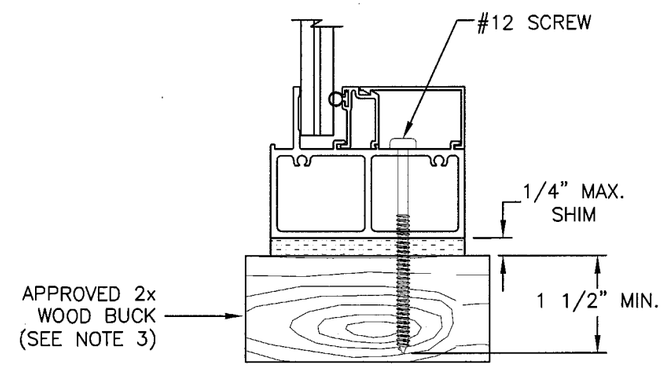

EQUAL LEG TO WOOD

NOTES:

1. USE ONLY MIAMI-DADE COUNTY APPROVED ELCO OR ITW TAPCONS.
2. SEE NOTES AND TABLES ON SHEETS 1 & 3 FOR PRESSURE LIMITATIONS WHEN ANCHORING WITH #12 SCREWS OR 3/16" TAPCONS.
3. INSTALLATION TO THE SUBSTRATE OF WOOD BUCKS 1 1/2" OR MORE THICK TO BE ENGINEERED BY OTHERS AND TO BE REVIEWED BY BUILDING OFFICIAL.
4. INSTALLATION TO THE SUBSTRATE OF WOOD BUCKS LESS THAN 1 1/2" THICK TO BE ENGINEERED BY OTHERS.

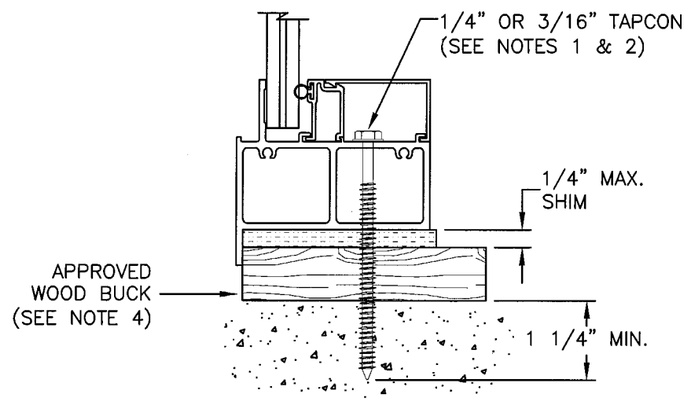

FLANGED TO CONCRETE W/ WOOD BUCK

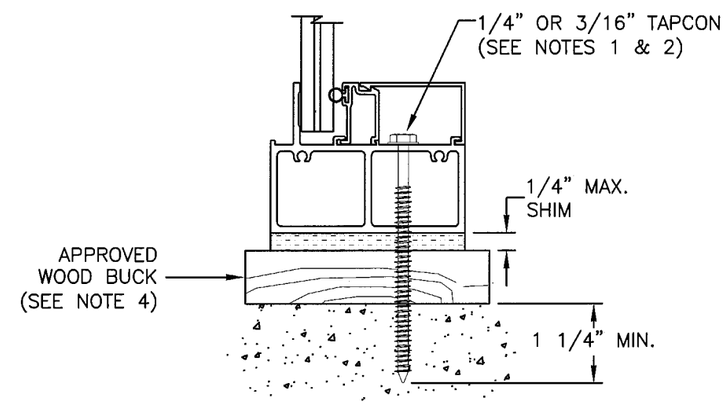

EQUAL LEG TO CONCRETE W/ WOOD BUCK

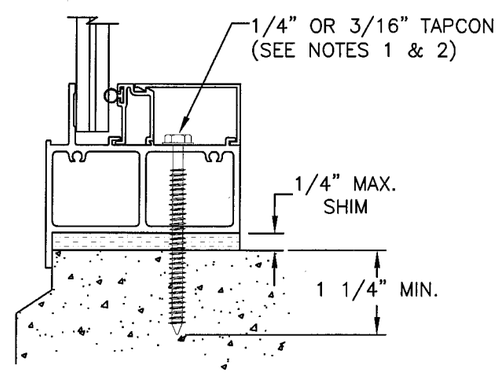

FLANGED TO CONCRETE

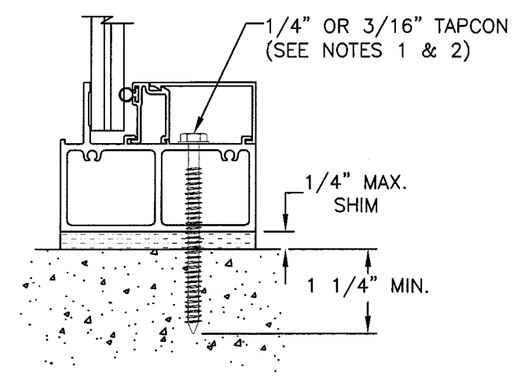

EQUAL LEG TO CONCRETE

Approved as complying with the Florida Building Code
Date 07/24/03
NOA# 03-0508.03
Miami Dade Product Control Division
By [signature]

[signature]
5/4/03

Robert L. Clark, P.E.
PE #39712
Structural

Revsd By:	Date:	Revisions:	
Revsd By:	Date:	Revisions:	
Revsd By:	Date:	Revisions:	
Drawn By: F.K.	Date: 4/16/03	Checked By:	Date:

1070 TECHNOLOGY DRIVE
NOKOMIS, FL 34275

P.O. BOX 1529
NOKOMIS, FL 34274

PGT
Visibly Better

Description: ANCHORAGE

Title: MID-RISE ALUM. PICTURE WINDOW (LG. MISSILE)

Series/Model:	Scale:	Sheet:	Drawing No.	Rev:
PW-820	NTS	6 of 6	4246-6	