MIAMI-DADE

BUILDING CODE COMPLIANCE OFFICE (BCCO)
PRODUCT CONTROL DIVISION

MIAMI-DADE COUNTY, FLORIDA
METRO-DADE FLAGLER BUILDING
140 WEST FLAGLER STREET, SUITE 1603
MIAMI, FLORIDA 33130-1563
(305) 375-2901 FAX (305) 375-2908

NOTICE OF ACCEPTANCE (NOA)

PGT Industries
P.O. Box 1529
Nokomis, FL 34274

SCOPE:
This NOA is being issued under the applicable rules and regulations governing the use of construction materials. The documentation submitted has been reviewed by Miami-Dade County Product Control Division and accepted by the Board of Rules and Appeals (BORA) to be used in Miami Dade County and other areas where allowed by the Authority Having Jurisdiction (AHJ).

This NOA shall not be valid after the expiration date stated below. The Miami-Dade County Product Control Division (In Miami Dade County) and/or the AHJ (in areas other than Miami Dade County) reserve the right to have this product or material tested for quality assurance purposes. If this product or material fails to perform in the accepted manner, the manufacturer will incur the expense of such testing and the AHJ may immediately revoke, modify, or suspend the use of such product or material within their jurisdiction. BORA reserves the right to revoke this acceptance, if it is determined by Miami-Dade County Product Control Division that this product or material fails to meet the requirements of the applicable building code.

This product is approved as described herein, and has been designed to comply with the High Velocity Hurricane Zone of the Florida Building Code.

DESCRIPTION: Series "SH-701" Aluminum Single Hung Window

APPROVAL DOCUMENT: Drawing No.**4040**, titled "Aluminum Single Hung Window", sheets 1 through 5 of 5, prepared by manufacturer, dated 2/9/98 with revision on 6/3/03, signed and sealed by Robert L. Clark, P.E., bearing the Miami-Dade County Product Control Revision stamp with the Notice of Acceptance number and expiration date by the Miami-Dade County Product Control Division.

MISSILE IMPACT RATING: Large and Small Missile Impact

LABELING: Each unit shall bear a permanent label with the manufacturer's name or logo, city, state and following statement: "Miami-Dade County Product Control Approved", unless otherwise noted herein.

RENEWAL of this NOA shall be considered after a renewal application has been filed and there has been no change in the applicable building code negatively affecting the performance of this product.

TERMINATION of this NOA will occur after the expiration date or if there has been a revision or change in the materials, use, and/or manufacture of the product or process. Misuse of this NOA as an endorsement of any product, for sales, advertising or any other purposes shall automatically terminate this NOA. Failure to comply with any section of this NOA shall be cause for termination and removal of NOA.

ADVERTISEMENT: The NOA number preceded by the words Miami-Dade County, Florida, and followed by the expiration date may be displayed in advertising literature. If any portion of the NOA is displayed, then it shall be done in its entirety.

INSPECTION: A copy of this entire NOA shall be provided to the user by the manufacturer or its distributors and shall be available for inspection at the job site at the request of the Building Official.
This NOA **revises NOA # 02-0702.04** and, consists of this page 1 as well as approval document mentioned above.
The submitted documentation was reviewed by **Theodore Berman, P.E.**

10/16/2003

PRODUCT CONTROL ACCEPTED

NOA No 03-0514.01
Expiration Date: November 01, 2006
Approval Date: November 06, 2003

PGT Industries

NOTICE OF ACCEPTANCE: EVIDENCE SUBMITTED

A. DRAWINGS

1. Manufacturer's die drawings and sections.
2. Drawing No.**4040**, titled "Aluminum Single Hung Window", sheets 1 through 5 of 5, prepared by manufacturer, dated 2/9/98 with revision on 6/3/03, signed and sealed by Robert L. Clark, P.E.

B. TESTS

1. Test reports on 1) Uniform Static Air Pressure Test, Loading per FBC, TAS 202-94
   2) Large Missile Impact Test per FBC, TAS 201-94
   3) Cyclic Wind Pressure Loading per FBC, TAS 203-94

   along with marked-up drawings and installation diagram of an aluminum single hung window, prepared by Fenestration Testing Laboratory, Inc., Test Report No. **FTL-03036**, dated 3/14/03, signed and sealed by Joseph Chan, P.E.

   Submitted under NOA# 01-0629.08
2. Test reports on 1) Air Infiltration Test, per FBC, TAS 202-94
   2) Uniform Static Air Pressure Test, Loading per FBC, TAS 202-94
   3) Water Resistance Test, per FBC, TAS 202-94
   4) Large Missile Impact Test per FBC, TAS 201-94
   5) Cyclic Wind Pressure Loading per FBC, TAS 203-94
   6) Forced Entry Test, per FBC 2411 3.2.1 and TAS 202-94

   along with marked-up drawings and installation diagram of an aluminum single hung window, prepared by Fenestration Testing Laboratory, Inc., Test Report No. **FTL-1889**, dated January 14, 1998, signed and sealed by Gilbert Diamond, P.E.
3. Test reports on 1) Air Infiltration Test, per FBC, TAS 202-94
   2) Uniform Static Air Pressure Test, Loading per FBC, TAS 202-94
   3) Water Resistance Test, per FBC, TAS 202-94
   4) Large Missile Impact Test per FBC, TAS 201-94
   5) Cyclic Wind Pressure Loading per FBC, TAS 203-94
   6) Forced Entry Test, per FBC 2411 3.2.1 and TAS 202-94

   along with marked-up drawings and installation diagram of an aluminum single hung window, prepared by Fenestration Testing Laboratory, Inc., Test Report No. **FTL-1852**, dated December 29, 1997, signed and sealed by Gilbert Diamond, P.E.

Theodore Berman, P.E.
Deputy Director, Product Control Division
NOA No 03-0514.01
Expiration Date: November 01, 2006
Approval Date: November 06, 2003

PGT Industries

NOTICE OF ACCEPTANCE: EVIDENCE SUBMITTED

C. CALCULATIONS

1. Anchor Calculations, ASTM-E1300-98, and structural analysis, dated 5/9/03, prepared, signed and sealed by Robert L. Clark, P.E.

D. MATERIAL CERTIFICATIONS

1. Notice of Acceptance No. **02-0828.15** issued to E.I. Dupont DeNemours for "Dupont Butacite" dated 11/21/02, expiring on 12/11/05.
2. Notice of Acceptance No. **03-0421.01** issued to Solutia for "Saflex HP", dated 5/22/03, expiring on 12/11/05.

E. QUALITY ASSURANCE

1. Miami-Dade County Building Code Compliance Office.

F. STATEMENTS

1. Laboratory compliance letter for Test Report no. **FTL-03036**, issued by Fenestration Testing Laboratory, Inc., dated 4/1/03, signed and sealed by Joseph Chan, P.E.

G. OTHER

1. Notice of Acceptance No. **02-0702.04,** issued to PGT Industries Corp., Aluminum Single Hung Window, approved on 07/16/02 and expiring on 11/1/06.
2. Letter from the consultant stating that the product is in compliance with the Florida Building Code (FBC).

Theodore Berman, P.E.
Deputy Director, Product Control Division
NOA No 03-0514.01
Expiration Date: November 01, 2006
Approval Date: November 06, 2003

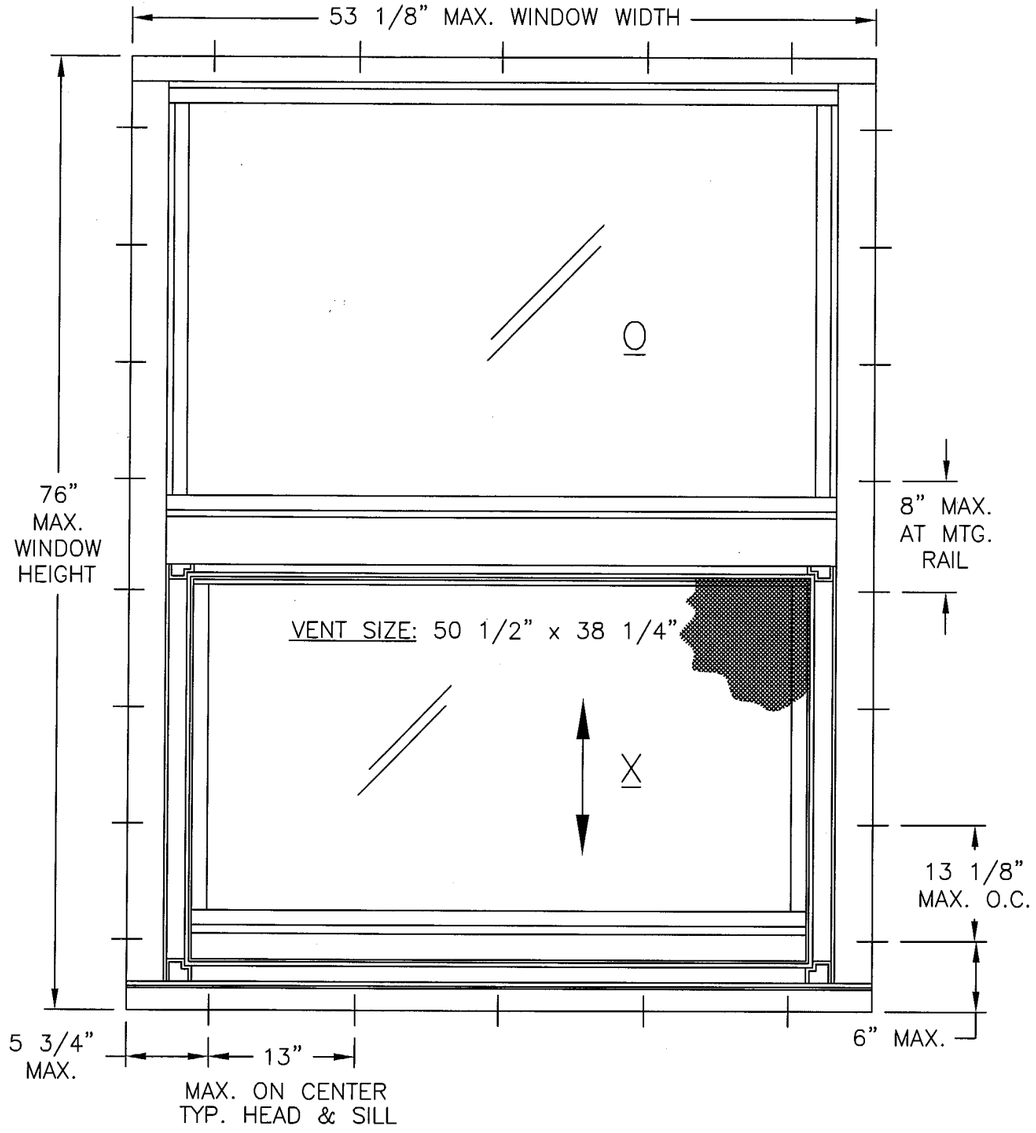

ELEVATION

NOTES CONTINUED

4.) ANCHORS: MAX. 5 3/4" FROM EACH CORNER (HEAD & SILL)
MAX. SPACING AT HEAD & SILL: 13.000
MAX. 6" FROM EACH CORNER (JAMBS)
MAX. SPACING AT MEETING RAIL: 8.000
MAX. SPACING AT JAMBS OTHERWISE: 13.125

5.) SHUTTER REQUIREMENT: NO SHUTTERS REQUIRED

6.) REFERENCE TEST REPORTS: FTL-1889 & FTL-3739

LARGE MISSILE IMPACT WINDOWS NOTES:

1.) GLAZING OPTIONS: A. 5/16" (.350) LAMINATED GLASS CONSISTING OF AN .090 PVB INNER LAYER BETWEEN (2) LITES OF 1/8" ANNEALED GLASS.

D

B. 5/16" (.350) LAMINATED GLASS CONSISTING OF AN .090 PVB INNER LAYER BETWEEN (2) LITES OF 1/8" HEAT STRENGTHENED GLASS.

C. 13/16" (.840) LAMI I.G. GLASS CONSISTING OF 1/8" HEAT STRENGTHENED GLASS, 3/8" AIR SPACE AND 5/16 LAMINATED GLASS (.090 PVB INNER LAYER BETWEEN (1) LITE OF 1/8" ANNEALED GLASS AND (1) LITE OF HEAT STRENGTHENED GLASS).

D. 13/16" (.840) LAMI I.G. GLASS CONSISTING OF 1/8" HEAT STRENGTHENED GLASS, 3/8" AIR SPACE AND 5/16 LAMINATED GLASS (.090 PVB INNER LAYER BETWEEN (2) LITES OF 1/8" HEAT STRENGTHENED GLASS.

2.) CONFIGURATIONS: OX

3.) DESIGN PRESSURE RATING: SEE TABLE

A NEGATIVE DESIGN LOADS BASED ON TESTED PRESSURE AND GLASS TABLES ASTM E 1300-98 (AND ASTM E 1300-94 OUTSIDE MIAMI-DADE COUNTY)

B. POSITIVE DESIGN LOADS BASED ON WATER TEST PRESSURE (FTL-1889) AND GLASS TABLES ASTM E 1300-98 (AND ASTM E 1300-94 OUTSIDE MIAMI-DADE COUNTY)

COMPARATIVE ANALYSIS TABLE:

GLASS TYPE:		
	A. 5/16" LAMINATED (1/8"A,.090,1/8"A)	FTL-1889
	B. 5/16" LAMINATED (1/8"HS,.090,1/8"HS)	FTL-1889
	C. 13/16" I.G., 1/8"HS, 3/8" SPACE, 5/16" LAMI (1/8"A,.090,1/8"HS)	FTL-3739
	D. 13/16" I.G., 1/8"HS, 3/8" SPACE, 5/16 LAMI (1/8"HS,.090,1/8"HS)	FTL-3739

D

WINDOW WIDTH		WINDOW HEIGHT							
		38.375		50.625		63.000		76.000	
26.500	A	66.7	-80.0	66.7	-80.0	66.7	-80.0	66.7	-80.0
	B,D	66.7	-80.0	66.7	-80.0	66.7	-80.0	66.7	-80.0
	C	66.7	-80.0	66.7	-80.0	66.7	-80.0	66.7	-80.0
37.000	A	66.7	-80.0	66.7	-80.0	66.7	-69.6	57.2	-57.2
	B,D	66.7	-80.0	66.7	-80.0	66.7	-80.0	66.7	-80.0
	C	66.7	-80.0	66.7	-80.0	66.7	-80.0	66.7	-76.1
53.125	A	66.7	-80.0	63.4	-63.4	47.9	-47.9	48.3	-48.3
	B,D	66.7	-80.0	66.7	-80.0	66.7	-80.0	66.7	-80.0
	C	66.7	-80.0	63.4	-63.4	58.7	-58.7	54.5	-54.5

PRODUCT REVISED
as complying with the Florida Building Code
Acceptance No. 03-0514.01
Expiration Date 11/01/06
By: [signature]
Miami Dade Product Control Division

Revsd By:	Date:	Revisions:
F.K.	6/3/03	D-ADD GLASS TYPE & TABLE
F.K.	03/26/03	C-ADD 13/16 I.G.
F.K.	10/11/01	TB, TABLE, EXTR.
D.B.	8/18/98	
Drawn By: D.B.	Date: 2/9/98	

Robert L. Clark
6/19/03

Robert L. Clark, P.E.
PE #39712
Structural

PGT INDUSTRIES

1070 TECHNOLOGY DRIVE
NOKOMIS, FL 34275

P.O. BOX 1529
NOKOMIS, FL 34274

Description: ELEVATION & NOTES

Title: ALUMINUM SINGLE HUNG WINDOW

Series/Model:	Scale:	Sheet:	Drawing No.	Rev:
SH-701	NTS	1 of 5	4040	D

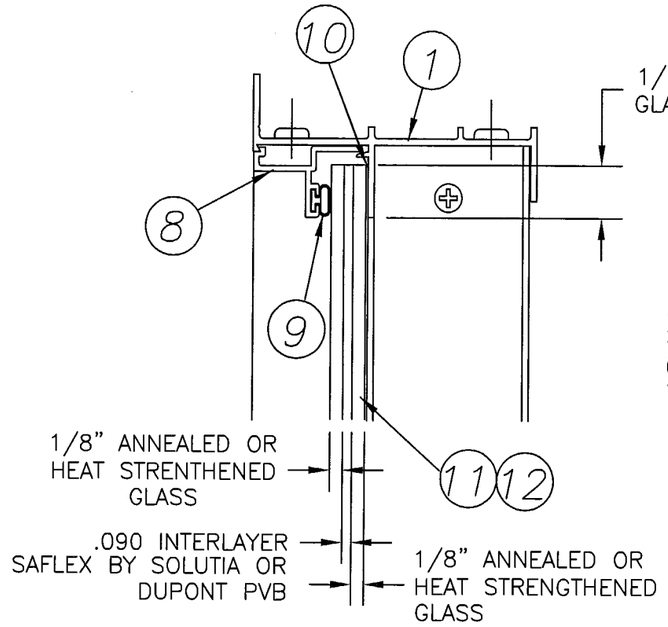

5/16" LAMINATED GLAZING DETAILS

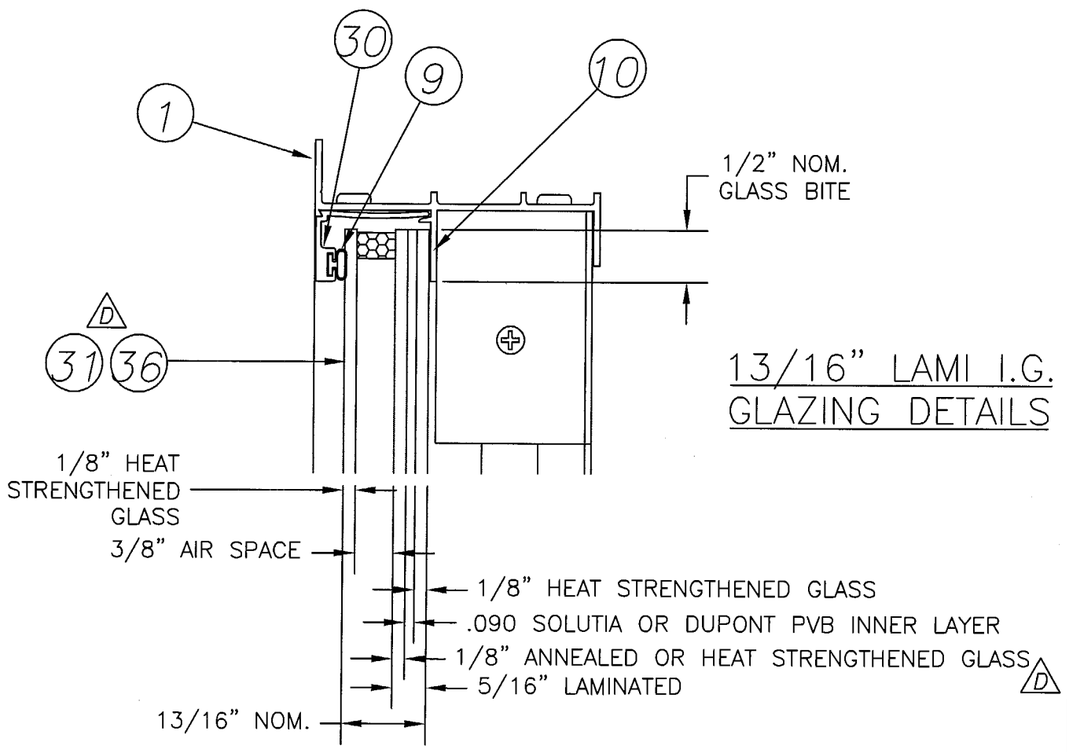

13/16" LAMI I.G. GLAZING DETAILS

ITEM	DESCRIPTION	V.T. #	QTY. / LOCATION	VENDOR	VENDOR #
1	FLANGED FRAME HEAD (Alum. 6063-T5)	612225	1	ALUMAX	AF-12225
2	FLANGED FRAME SILL (Alum. 6063-T5)	612226	1	ALUMAX	AF-12226
3	FLANGED FRAME JAMB (Alum. 6063-T5)	612227	2	ALUMAX	AF-12227
4	FIXED MEETING RAIL (Alum. 6063HS-T54)	4054A	1	INDALEX	64054A
5	SASH TOP RAIL (Alum. 6063HS-T54)	4006C	1	INDALEX	64006
6	SASH BOTTOM RAIL (Alum. 6063-T5)	612230	1	ALUMAX	AF-12230
7	SASH SIDE RAIL (Alum. 6063-T5)	612231	2	ALUMAX	AF-12231
8	GLAZING BEAD (Alum. 6063-T5)	6534571	8	ALUMAX	AF-534571
9	WEATHERSTRIP - VINYL BULB	6TP247K	8 (1 per Glazing Bead)	TEAM PLASTICS	TP-247
10	SILICON	62899C		DOW CORNING	899
11	5/16" (.350) W/SAFLEX BY SOLUTIA INTERLAYER		2	H.P.G.	
12	5/16" (.350) W/DUPONT PVB INTERLAYER		2	H.P.G.	
13	#6 x .750 PHIL. PN. HD.	7658PFAA	2 (to attach Balances to Jambs)	AQUA FASTENERS	
14	SWEEP LATCH		1(11.5" from end of vent top rail) 2(if width is >= 42")	MINIATURE DIE CASTING	PGT.214.XX
15	#8 x .625 PHIL FLT. HD.	7858WW	2 (Sweep Latch Screws) 4 (when using 2 Sweep Latches)	MERCHANTS FASTENER	
16	WINDLOAD ADAPTER (Alum. 6063-T5)	612236	2 (@ frame jambs, 30" from bot.)	ALUMAX	AF-12236
17	#8 x .375 PHIL. P.H. TEK	78X38PPT	4 (Windload Adapter Screws)	MERCHANTS FASTENER	
18	WEATHERSTRIP - VINYL BULB\SASH	6TP249K	1 (at Vent Bottom Rail)	TEAM PLASTICS	TP-249
19	SASH TOP GUIDE		2 (1 per each balance)	MASTER TOOL	
20	SCREEN		1	VINYL TECH.\PGT	
21	BALANCE COVER		2 (1 per each balance)	WYBORG	5TAVE
22	BALANCE		2 (1 @ each frame jamb)	CALDWELL	
23	WSTP, .270 x .170 BACK, FIN SEAL	1235	3 (@ vent jambs & vent top rail)	SCHLEGEL OR EQUIV.	67S16G
24	SASH FACE GUIDE	71087	2 (1/vent jamb. 2.5" from bot.)	VINYL TECH.\PGT	
25	#6 x .500 PHIL. FLT. HD.	76X12FPAW	(sash face guide screws)	SCHERER IND. PROD.	
26	SASH STOP (Alum. 6063-T5)	612244	2 (@ top of each frame jamb)	ALUMAX	AF-12244
27	#8 x 1.000 PHIL. P.H. SMS	78X1PPA	4 (Frame & Vent Assy. screws)	MERCHANTS FASTENER	
28	SEAM SEALER	6SM55W		SCHNEE/MOREHEAD	SM5504
29	WINDLOAD ADAPTER (PLASTIC)	61207	2 (@ frame jambs, 30" from bot.)	PROTOTYPE	WC996-1207
30	GLAZING BEAD (13/16" I.G.) 6063-T5	4067	8	INDALEX	64067
31	13/16" LAMI I.G. GLASS (1/8" HS & 5/16" LAMI W/ 3/8" AIR SPACE) 5/16" LAMI - (2) LITES OF 1/8" HS GLASS W/ .090 SOLUTIA OR DUPONT PVB INNER LAYER			PGT	
32	WSTP, .187 x .230 BACK, FIN SEAL	1060	1 (@ MEETING RAIL	SCHLEGEL OR EQUIV.	61060G
33	EGRESS LATCH (OPTIONAL)	64009	2		64009
34	SPRING, SILL LATCH (OPTIONAL)		2		7SPRNG
35	BALANCE, ULTRA-LIFT, SASHES > 40#	4029-1	2	CALDWELL	
D 36	13/16" LAMI I.G. GLASS (1/8" HS & 5/16" LAMI W/ 3/8" AIR SPACE) 5/16" LAMI - (1) LITE OF 1/8" A GLASS & (1) LITE OF HS GLASS W/ .090 SOLUTIA OR DUPONT PVB INNER LAYER			PGT	

PRODUCT REVISED
as complying with the Florida Building Code
Acceptance No. 03-0514.01
Expiration Date 11/01/06
By [signature]
Miami Dade Product Control Division

REFERENCE TEST REPORTS: FTL-1889 & FTL-3739

[signature] 6/19/03

Robert L. Clark, P.E.
PE #39712
Structural

PGT INDUSTRIES

1070 TECHNOLOGY DRIVE
NOKOMIS, FL 34275

P.O. BOX 1529
NOKOMIS, FL 34274

Revsd By:	Date:	Revisions:
F.K.	6/3/03	D-ADD GLASS TYPE ITEM 36
F.K.	03/26/03	C-ADD 130-135
F.K.	10/11/01	TB, TABLE, EXTR.
D.B.	8/18/98	
Drawn By: D.B.	Date: 2/9/98	

Description: PARTS LIST & GLAZING OPTIONS

Title: ALUMINUM SINGLE HUNG WINDOW

Series/Model:	Scale:	Sheet:	Drawing No.	Rev:
SH-701	NTS	2 of 5	4040	D

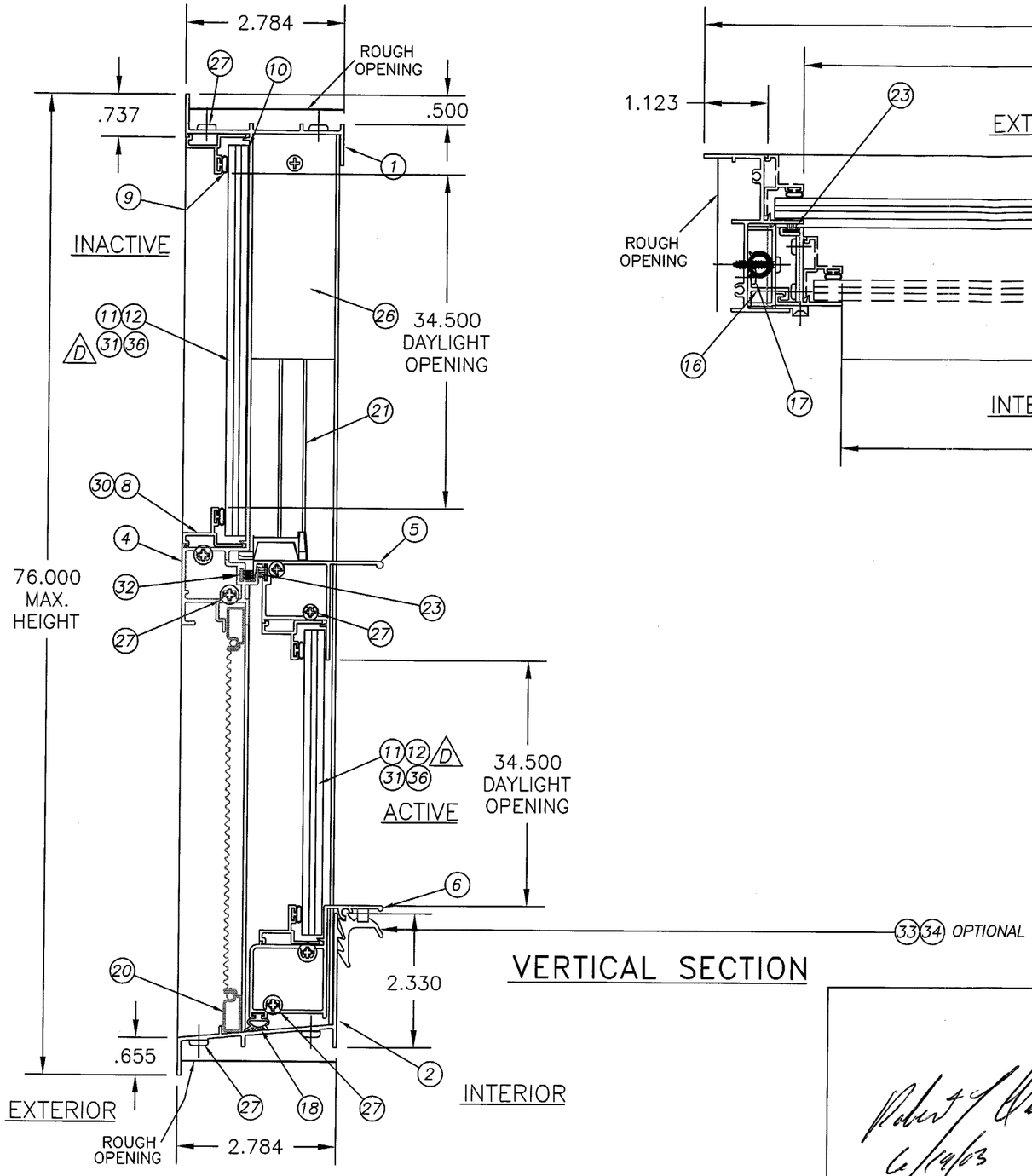

VERTICAL SECTION

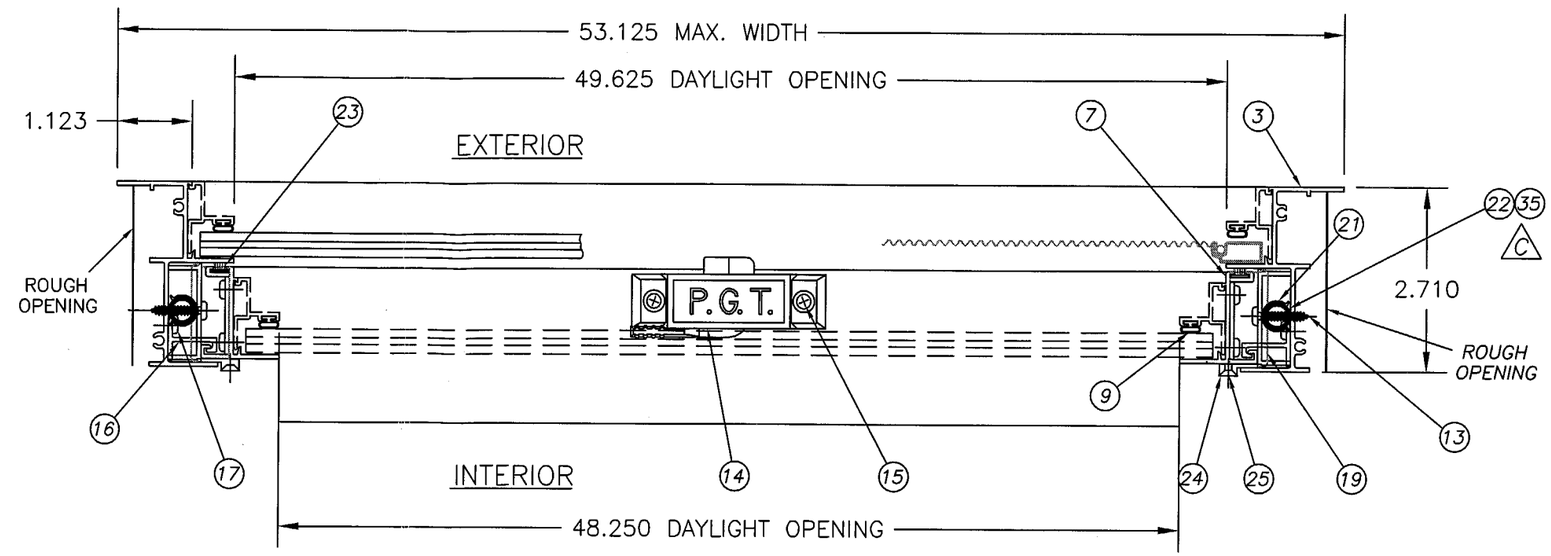

HORIZONTAL SECTION

PRODUCT REVISED
as complying with the Florida Building Code
Acceptance No. 03-0514.01
Expiration Date 12/01/06
By
Miami Dade Product Control Division

REFERENCE TEST REPORTS: FTL-1889 & FTL-3739

Robert L. Clark
6/19/03

Robert L. Clark, P.E.
PE #39712
Structural

PGT INDUSTRIES

1070 TECHNOLOGY DRIVE
NOKOMIS, FL 34275

P.O. BOX 1529
NOKOMIS, FL 34274

Revsd By:	Date:	Revisions:
F.K.	6/3/03	D-ADD GLASS TYPE ITEM 36
F.K.	03/26/03	C-ADD 130-135
F.K.	10/11/01	TB, TABLE, EXTR.
D.B.	8/18/98	
Drawn By: D.B.	Date: 2/9/98	

Description: SECTIONS

Title: ALUMINUM SINGLE HUNG WINDOW

Series/Model:	Scale:	Sheet:	Drawing No.	Rev:
SH-701	NTS	3 of 5	4040	D

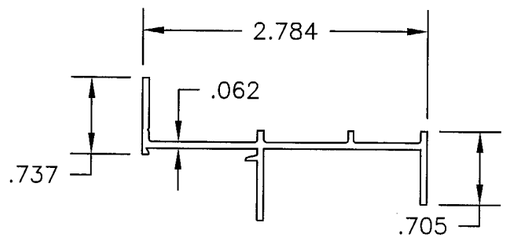

1 ALUM. 6063–T5

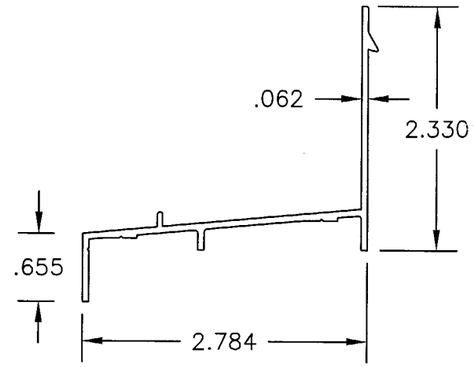

2 ALUM. 6063–T5

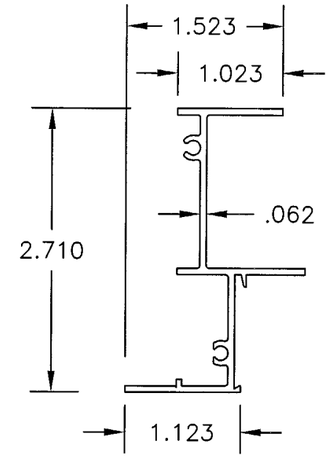

3 ALUM. 6063–T5

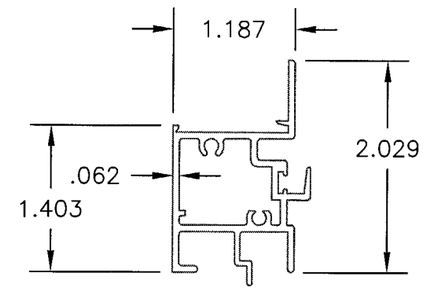

4 ALUM. 6063HS–T54

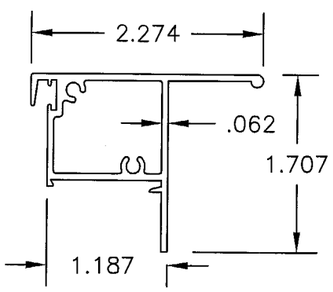

5 ALUM. 6063HS–T54

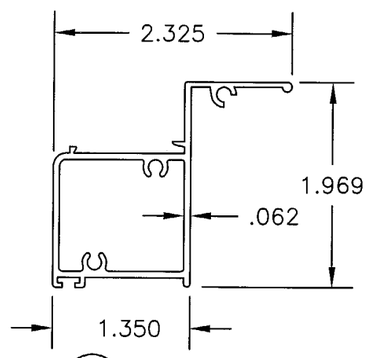

6 ALUM. 6063–T5

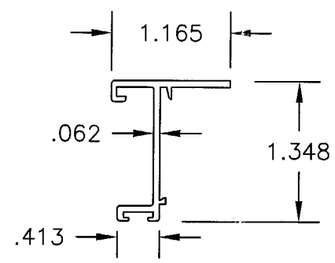

7 ALUM. 6063–T5

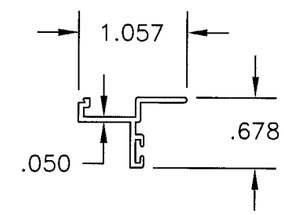

8 ALUM. 6063–T5

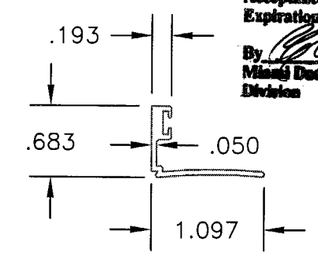

30 ALUM. 6063–T5

PRODUCT REVISED
as complying with the Florida Building Code
Acceptance No. 03-0514.01
Expiration Date 11/01/06
By [signature]
Miami-Dade Product Control Division

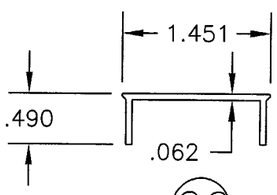

26 ALUM. 6063–T5

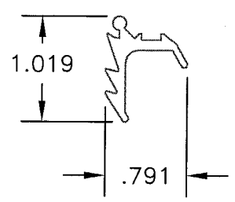

33 ALUM. 6063–T5

REFERENCE TEST REPORTS: FTL–1889 & FTL–3739

Robert L. Clark
6/19/03

Robert L. Clark, P.E.
PE #39712
Structural

PGT INDUSTRIES

1070 TECHNOLOGY DRIVE
NOKOMIS, FL 34275

P.O. BOX 1529
NOKOMIS, FL 34274

Revsd By:	Date:	Revisions:
F.K.	6/3/03	D–NO CHG THIS SHT
F.K.	03/26/03	C–ADD 130,33 CHG 14,5
F.K.	10/11/01	TB, TABLE, EXTR.
D.B.	8/18/98	
Drawn By: D.B.	Date: 2/9/98	

Description: EXTRUSIONS

Title: ALUMINUM SINGLE HUNG WINDOW

Series/Model:	Scale:	Sheet:	Drawing No.	Rev:
SH–701	NTS	4 of 5	4040	D

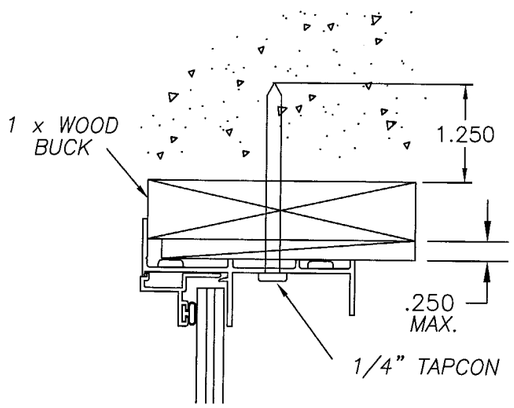

TYP. HEAD

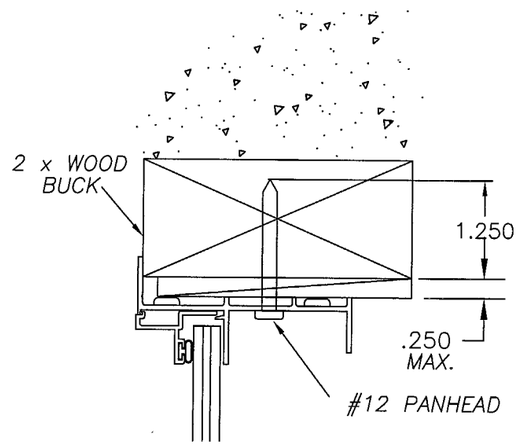

TYP. HEAD

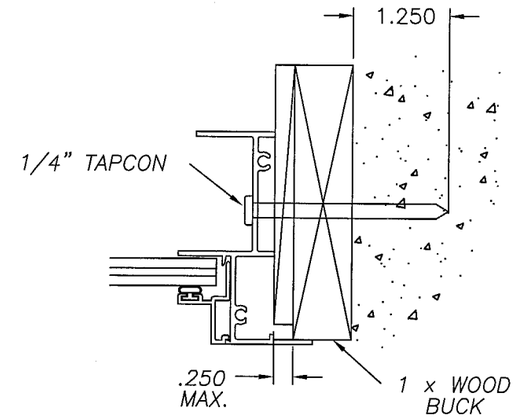

TYP. JAMB

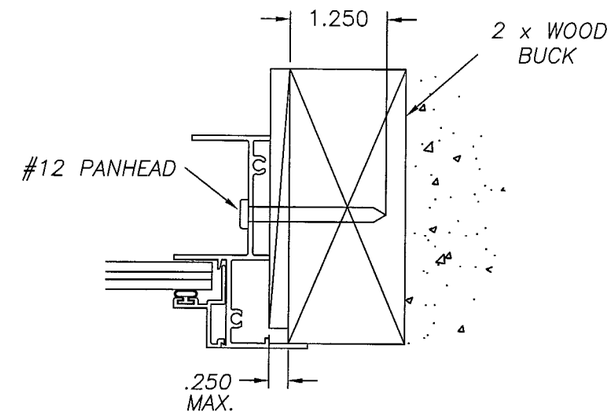

TYP. JAMB

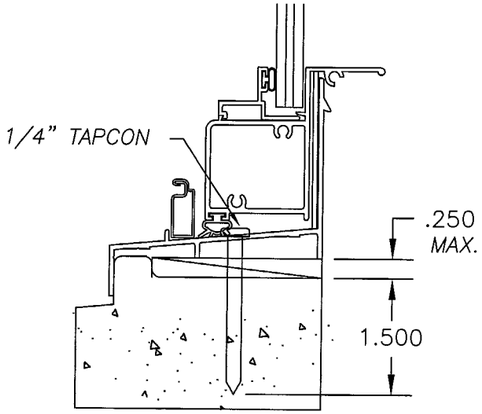

TYP. SILL

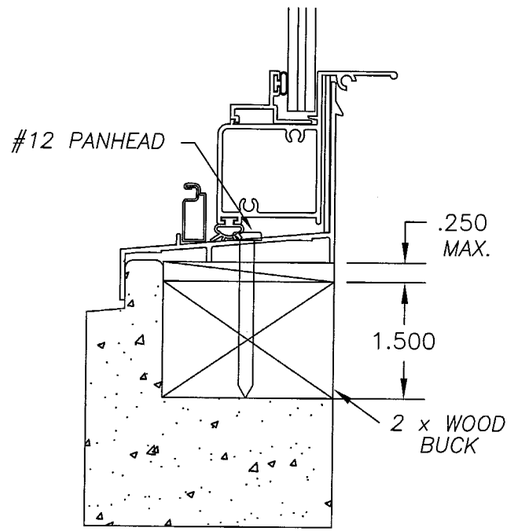

TYP. SILL

REFERENCE TEST REPORTS: FTL-1889 & FTL-3739

PRODUCT REVISED
as complying with the Florida Building Code
Acceptance No. 03-0514.01
Expiration Date 11/01/06
By Miami Dade Product Control Division

Revsd By:	Date:	Revisions:
F.K.	6/3/03	D-NO CHG THIS SHT
F.K.	03/26/03	C-NO CHG THIS SHT.
F.K.	10/11/01	TB, TABLE, EXTR.
D.B.	8/18/98	
Drawn By: D.B.	Date: 2/9/98	

Robert L. Clark
6/19/03
Robert L. Clark, P.E.
PE #39712
Structural

PGT INDUSTRIES
1070 TECHNOLOGY DRIVE
NOKOMIS, FL 34275
P.O. BOX 1529
NOKOMIS, FL 34274

Description: ANCHORAGE

Title: ALUMINUM SINGLE HUNG WINDOW

Series/Model:	Scale:	Sheet:	Drawing No.	Rev:
SH-701	NTS	5 of 5	4040	D