MIAMI-DADE

BUILDING CODE COMPLIANCE OFFICE (BCCO)
PRODUCT CONTROL DIVISION

MIAMI-DADE COUNTY, FLORIDA
METRO-DADE FLAGLER BUILDING
140 WEST FLAGLER STREET, SUITE 1603
MIAMI, FLORIDA 33130-1563
(305) 375-2901 FAX (305) 375-2908

NOTICE OF ACCEPTANCE (NOA)

Caradco Windows & Doors
201 Evans Road
Rantoul, IL 61866

SCOPE:
This NOA is being issued under the applicable rules and regulations governing the use of construction materials. The documentation submitted has been reviewed by Miami-Dade County Product Control Division and accepted by the Board of Rules and Appeals (BORA) to be used in Miami Dade County and other areas where allowed by the Authority Having Jurisdiction (AHJ).

This NOA shall not be valid after the expiration date stated below. The Miami-Dade County Product Control Division (In Miami Dade County) and/or the AHJ (in areas other than Miami Dade County) reserve the right to have this product or material tested for quality assurance purposes. If this product or material fails to perform in the accepted manner, the manufacturer will incur the expense of such testing and the AHJ may immediately revoke, modify, or suspend the use of such product or material within their jurisdiction. BORA reserves the right to revoke this acceptance, if it is determined by Miami-Dade County Product Control Division that this product or material fails to meet the requirements of the applicable building code.

This product is approved as described herein, and has been designed to comply with the High Velocity Hurricane Zone of the Florida Building Code.

DESCRIPTION: Series "Carclad" Aluminum Clad Wood Fixed Window

APPROVAL DOCUMENT Drawing No. **W03-29,** titled " 'Car Clad' Alum Clad Wood Fixed Casement Win. (Impact)", sheets 1 through 5 of 5, prepared by Al Farooq Corporation, dated 11/2/98 with revision on 4/23/03, signed and sealed by Humayoun Farooq, P.E., bearing the Miami-Dade County Product Control Revision stamp with the Notice of Acceptance number and expiration date by the Miami-Dade County Product Control Division.

MISSILE IMPACT RATING: None

LABELING: Each unit shall bear a permanent label with the manufacturer's name or logo, city, state and following statement: "Miami-Dade County Product Control Approved", unless otherwise noted herein.

RENEWAL of this NOA shall be considered after a renewal application has been filed and there has been no change in the applicable building code negatively affecting the performance of this product.

TERMINATION of this NOA will occur after the expiration date or if there has been a revision or change in the materials, use, and/or manufacture of the product or process. Misuse of this NOA as an endorsement of any product, for sales, advertising or any other purposes shall automatically terminate this NOA. Failure to comply with any section of this NOA shall be cause for termination and removal of NOA.

ADVERTISEMENT: The NOA number preceded by the words Miami-Dade County, Florida, and followed by the expiration date may be displayed in advertising literature. If any portion of the NOA is displayed, then it shall be done in its entirety.

INSPECTION: A copy of this entire NOA shall be provided to the user by the manufacturer or its distributors and shall be available for inspection at the job site at the request of the Building Official.
This NOA **revises NOA # 01-0814.01** and, consists of this page 1 as well as approval document mentioned above.
The submitted documentation was reviewed by **Theodore Berman, P.E.**

5/30/2003

PRODUCT CONTROL ACCEPTED

Caradco Windows & Doors

NOTICE OF ACCEPTANCE: EVIDENCE SUBMITTED

(For File ONLY. Not part of NOA)

A. DRAWINGS

1. Manufacturer's die drawings and sections.
2. Drawing No. **W98-90,** titled " 'Car Clad' Alum Clad Wood Fixed Casement Win. (Impact)", sheets 1 through 5 of 5, prepared by Al Farooq Corporation, dated 11/2/98 with revision on 4/23/03, signed and sealed by Humayoun Farooq, P.E.

B. TESTS

Submitted under NOA# 98-1226.03

1. Test reports on 1) Air Infiltration Test, per FBC, TAS 202-94
   2) Uniform Static Air Pressure Test, Loading per FBC, TAS 202-94
   3) Water Resistance Test, per FBC, TAS 202-94
   4) Forced Entry Test, per FBC 2411 3.2.1 and TAS 202-94

   along with marked-up drawings and installation diagram of an aluminum clad wood awning window, prepared by National Certified Testing Laboratories, Test Report No. **NCTL-210-1732-7S, 8S & 9S**, dated April 24, 1995 revised and reissued on September 7, 1995, Test Report No. **NCTL-210-1628-7S, 8S & 9S**, dated September 4, 1994, both signed and sealed by Barry Portnoy, P.E.
2. Test reports on 1) Air Infiltration Test, per FBC, TAS 202-94
   2) Uniform Static Air Pressure Test, Loading per FBC, TAS 202-94
   3) Water Resistance Test, per FBC, TAS 202-94
   4) Large Missile Impact Test per FBC, TAS 201-94
   5) Cyclic Wind Pressure Loading per FBC, TAS 203-94
   6) Forced Entry Test, per FBC 2411 3.2.1 and TAS 202-94

   along with marked-up drawings and installation diagram of an aluminum clad wood fixed, casement and awning windows, prepared by National Certified Testing Laboratory, Inc., Test Report No. **NCTL-210-2058-3, 5, 6, 7 (S)(I)(C)**, dated 06/12/98, signed and sealed by Barry D. Portnoy, P.E.
3. Test reports on 1) Air Infiltration Test, per FBC, TAS 202-94
   2) Uniform Static Air Pressure Test, Loading per FBC, TAS 202-94
   3) Water Resistance Test, per FBC, TAS 202-94
   4) Large Missile Impact Test per FBC, TAS 201-94
   5) Cyclic Wind Pressure Loading per FBC, TAS 203-94
   6) Forced Entry Test, per FBC 2411 3.2.1 and TAS 202-94

   along with marked-up drawings and installation diagram of an aluminum clad wood fixed, and casement windows side-by-side configuration, prepared by National Certified Testing Laboratory, Inc., Test Report No. **NCTL-210-2058-1 (S)(I)(C)**, dated 06/12/98, signed and sealed by Barry D. Portnoy, P.E.

Theodore Berman

Theodore Berman, P.E.
Deputy Director, Product Control Division
NOA No 03-0521.02
Expiration Date: July 31, 2006
Approval Date: June 19, 2003

NOTICE OF ACCEPTANCE: EVIDENCE SUBMITTED

(For File ONLY. Not part of NOA)

C. CALCULATIONS

1. Anchor Calculations and structural analysis, prepared by Al-Farooq Corporation, dated 10/25/02, signed and sealed by Humayoun Farooq, P.E.

Submitted under NOA# 98-1226.03

2. Anchor Calculations and structural analysis, prepared by Al-Farooq Corporation, dated July 19, 1995, signed and sealed by Humayoun Farooq, P.E.
3. Anchor Calculations and structural analysis, prepared by Al-Farooq Corporation, dated October 20, 1998, signed and sealed by Humayoun Farooq, P.E.

D. MATERIAL CERTIFICATIONS

Submitted under NOA# 98-1226.03

1. Notice of Acceptance No. **00-0524.06** issued to Nebula Glass International, Inc. for "Glasslam Safety-Plus Laminated Glass" dated 09/21/00, expiring on 09/09/03.
2. Notice of Acceptance No. **02-0115.03** issued to Globe Amerada Glass Co. for "Glass Clad Polycarbonate" dated 02/0702, expiring on 09/03/06.
3. Notice of Acceptance No. **03-0417.01** issued to Cardinal LG for "Cardinal Sea-Storm Type B" dated 5/15/03, expiring on 12/30/07.

E. STATEMENTS

None

F. OTHER

1. Notice of Acceptance No. **01-0814.01**, issued to Caradco Windows & Doors, Series "Carclad" Aluminum Clad Wood Fixed Window, approved on 11/29/01 and expiring on 7/31/06.

Theodore Berman

Theodore Berman, P.E.
Deputy Director, Product Control Division
NOA No 03-0521.02
Expiration Date: July 31, 2006
Approval Date: June 19, 2003

DESIGN LOAD CAPACITY - PSF					
		NON-IMPACT WINDOWS DADE COUNTY APPD. IMPACT RESISTANT SHUTTERS REQD.			
WINDOW DIMENSIONS		GLASS TYPE 'A'		GLASS TYPE 'B'	
WIDTH	HEIGHT	EXT. (+)	INT. (−)	EXT. (+)	INT. (−)
36"	40"	77.9	77.9	100.0	136.4
40"		71.3	71.3	100.0	128.9
48"		58.9	58.9	100.0	107.4
56"		50.9	50.9	92.4	105.0
60"		46.8	46.8	89.1	101.3
64"		43.7	43.7	86.4	98.2
72"		38.9	38.9	82.2	93.5
36"	48"	65.0	65.0	100.0	119.3
40"		58.9	58.9	100.0	107.4
48"		50.0	50.0	89.5	89.5
56"		44.8	44.8	86.6	95.9
60"		41.6	41.6	82.5	89.5
64"		38.0	38.0	79.2	90.0
72"		32.9	32.9	74.3	84.4
36"	56"	54.0	54.0	97.3	110.5
40"		50.9	50.9	92.4	105.0
48"		44.8	44.8	86.6	95.9
56"		37.1	37.1	82.2	82.2
60"		34.0	34.0	76.7	76.7
64"		31.9	31.9	75.4	85.7
72"		28.4	28.4	69.4	76.7
36"	60"	50.0	50.0	94.3	107.1
40"		46.8	46.8	89.1	101.3
48"		41.6	41.6	82.5	89.5
56"		34.0	34.0	76.7	76.7
60"		31.7	31.7	71.6	71.6
64"		29.7	29.7	74.5	80.6
72"		26.6	26.6	67.9	71.6
36"	64"	46.6	46.6	91.8	104.3
40"		43.7	43.7	86.4	98.2
48"		38.0	38.0	79.2	90.0
56"		31.9	31.9	75.4	85.7
60"		29.7	29.7	74.5	80.6
64"		28.1	28.1	74.3	75.5
72"		25.2	25.2	66.8	67.1
36"	72"	38.2	38.2	88.0	100.0
40"		38.9	38.9	82.2	93.5
48"		32.9	32.9	74.3	84.4
56"		28.4	28.4	69.4	76.7
60"		26.6	26.6	67.9	71.6
64"		25.2	25.2	66.8	67.1
72"		–	–	59.7	59.7

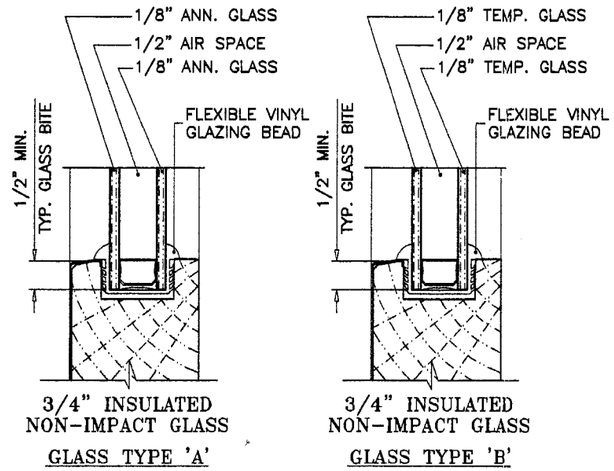

GLASS OPTIONS

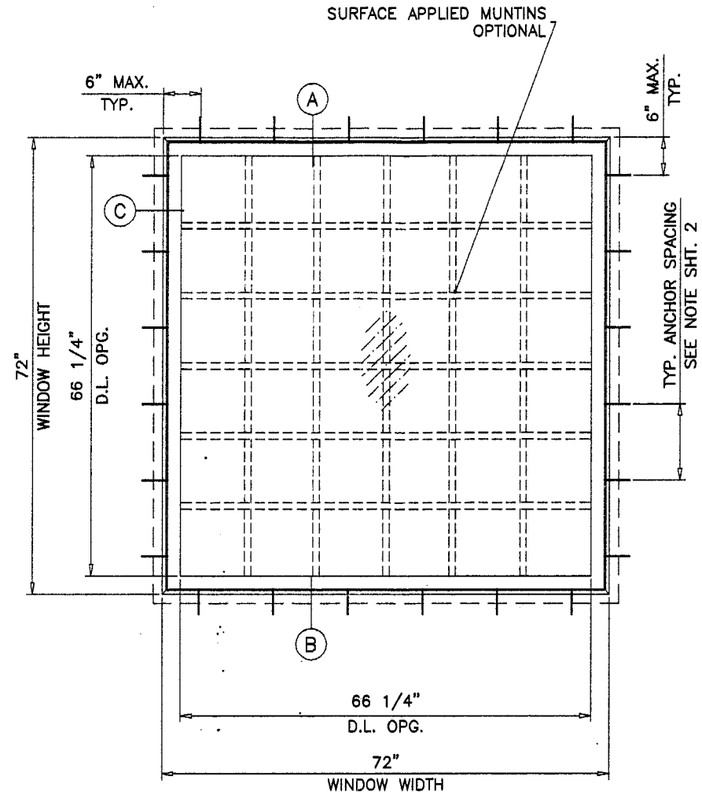

TYPICAL ELEVATION
TESTED UNIT

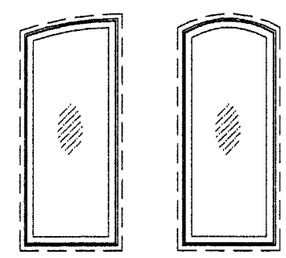

SEGMENT HEAD WINDOWS

WINDOWS NOT RATED FOR IMPACT.
MIAMI–DADE COUNTY APPROVED IMPACT RESISTANT SHUTTERS ARE REQUIRED.

NOTES

1. THIS PRODUCT IS DESIGNED TO COMPLY WITH THE HIGH VELOCITY HURRICANE ZONE OF THE 2001 FLORIDA BUILDING CODE. ALSO FOR WIND LOADS AS PER ASCE 7–88. ASCE 7–93, ASCE 7–95 OR ASCE 7–98 AS REQUIRED BY PREVAILING BUILDING CODE.
2. WOOD BUCKS BY OTHERS, MUST BE ANCHORED PROPERLY TO TRANSFER LOADS TO THE STRUCTURE.
3. ANCHORS SHALL BE AS LISTED, SPACED AS SHOWN ON DETAILS. ANCHOR EMBEDMENT TO BASE MATERIAL SHALL BE BEYOND WALL DRESSING OR STUCCO.
4. ANCHORING OR LOADING CONDITIONS NOT SHOWN IN THESE DETAILS ARE NOT PART OF THIS APPROVAL.

Engr: DR. HUMAYOUN FAROOQ
STRUCTURES
FLA. PE # 16557
C.A.N. 3538
MAY 08 2003

PRODUCT REVISED
as complying with the Florida Building Code
Acceptance No. 03-0521.02
Expiration Date 02/31/06
By Theodore Berner
Miami Dade Product Control Division

AL-FAROOQ CORPORATION
ENGINEERS, PLANNERS & PRODUCT DESIGN
1235 SW 87 AVE
MIAMI, FLORIDA 33174
TEL. (305) 264-8100 FAX. (305) 262-6978
COMP-ANL\W03-29CO

'CAR CLAD' ALUM CLAD WOOD FIXED CASEMENT WDW. (N.I.)

CARADCO WOOD WINDOWS & PATIO DOORS
201 EVANS ROAD
RANTOUL, ILLINOIS 61866
TEL. (217) 893-4444 FAX (217) 893-0921

revisions:			
no	date	by	description

date: 04-24-03
scale: 1/2" = 1"
dr. by: HAMID
chk. by:

drawing no.
W03-29

WOOD BUCKS NOT BY CARADCO, MUST SUSTAIN LOADS IMPOSED BY GLAZING SYSTEM AND TRANSFER THEM TO THE BUILDING STRUCTURE.

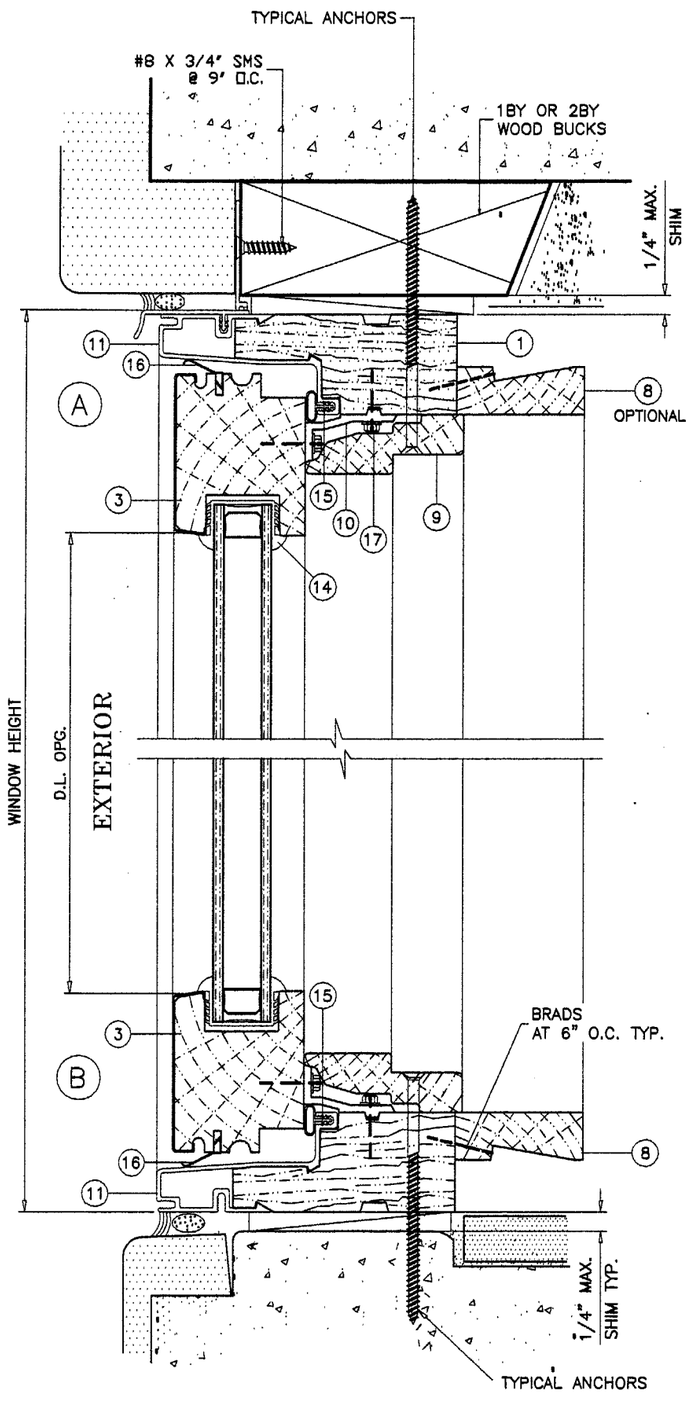

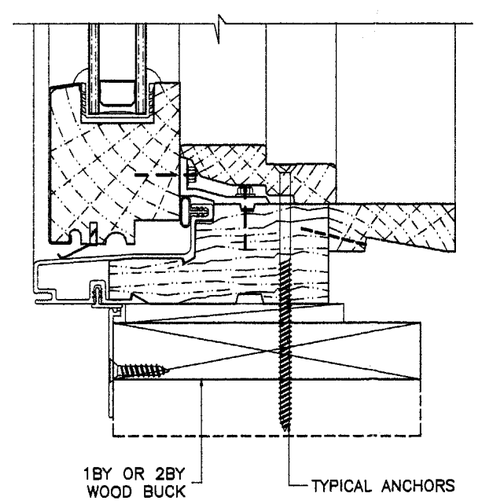

TYPICAL ANCHORS:

A. INTO 2BY WOOD BUCKS OR WOOD STRUCTURE
10 SMS WITH 1-3/8" MIN. PENETRATION INTO WOOD AT 6" FROM ENDS AND 8" O.C.

B. INTO 1BY WOOD BUCKS OR INTO MASONRY
3/16" DIA. TAPCONS WITH 1-1/4" MIN. EMBED INTO MASONRY AT 6" FROM ENDS AND 12" O.C.

Engr: DR. HUMAYOUN FAROOQ
STRUCTURES
FLA. PE # 16557
C.A.N. 3538

MAY 08 2003

PRODUCT REVISED
as complying with the Florida Building Code
Acceptance No 03-0521.02
Expiration Date 07/31/06
By Gheordne Demay
Miami Dade Product Control Division

AL-FAROOQ CORPORATION
ENGINEERS, PLANNERS & PRODUCT DESIGN
1235 SW 87 AVE
MIAMI, FLORIDA 33174
TEL (305) 264-8100 FAX. (305) 262-6978
COMP-ANL\W03-29CO

'CAR CLAD' ALUM CLAD WOOD FIXED CASEMENT WDW. (N.L)

CARADCO WOOD WINDOWS & PATIO DOORS
201 EVANS ROAD
RANTOUL, ILLINOIS 61866
TEL. (217) 893-4444 FAX (217) 893-0921

revisions:			
no	date	by	description

date: 04-24-03
scale: 1/2" = 1"
dr. by: HAMID
chk. by:

drawing no. W03-29

ITEM #	REQD.	PART NO.	DESCRIPTION	MATERIAL	MANF./SUPPLIER/REMARKS
1	AS REQD.	CA-03/04	HEAD/SILL/JAMB	TIMBERSTRAND	CARADCO
3	2/SASH	–	SASH RAIL (INSUL. GLASS)	WOOD	CARADCO
5	2/ SASH	–	SASH STILE (INSUL. GLASS)	WOOD	CARADCO
8	4	CA-18/19	X-JAMB (OPTIONAL)	WOOD	CARADCO
9	4	CA-10	VERTICAL/HORIZONTAL STOP	WOOD	CARADCO
10	AS REQD.	–	VENT BRACKET, 7/8" LONG	NYLON	AT 6" FROM ENDS & 12" O.C.
11	AS REQD.	P-14	FRAME NOSING	6063-T5	–
12	1/MULLION	CA-13	MULLION CASING	WOOD	CARADCO
13	1/ MULLION	PP25	MULLION CONNECTOR	6063-T5	CARADCO
14	AS REQD.	P52	3/4" GLAZING GASKET (INSUL. GLASS ONLY)	VINYL	CARADCO
15	AS REQD.	S90-078	BULB WEATHERSTRIP	PVC	AT EACH FRAME MEMBER
16	AS REQD.	PPO	LEAF WEATHERSTRIP	POLYPROPYLENE	AT EACH SASH MEMBER
17	AS REQD.	2/BRACKET	# 8 X 1" HEX HEAD WOOD SCREWS	–	–

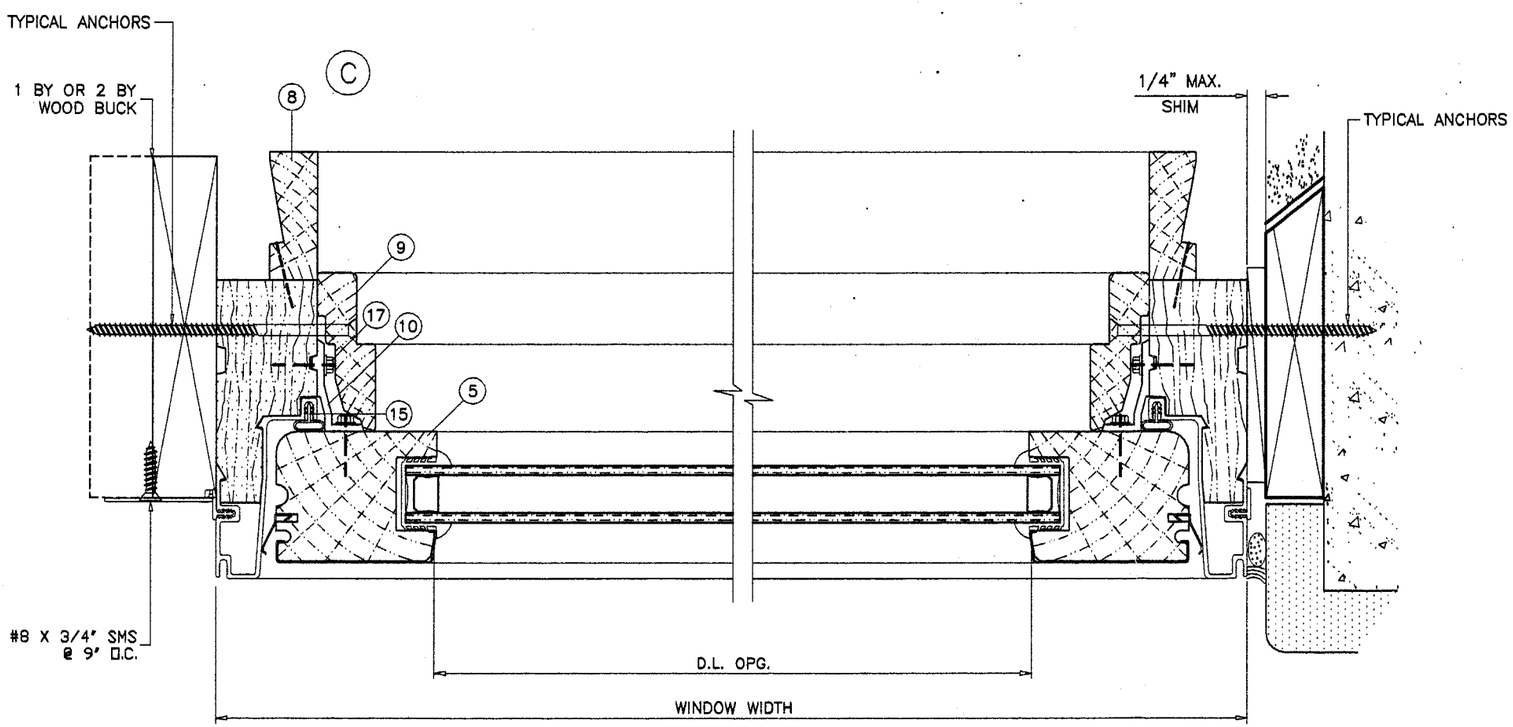

EXTERIOR

PRODUCT REVISED
as complying with the Florida Buiding Code
Acceptance No 03-0521.02
Expiration Date 07/31/06
By Theodore Berman
Miami Dade Product Control Division

Engr: DR. HUMAYOUN FAROOQ
STRUCTURES
FLA. PE # 16557
C.A.N. 3538

AL-FAROOQ CORPORATION
ENGINEERS, PLANNERS & PRODUCT DESIGN
1235 SW 87 AVE
MIAMI, FLORIDA 33174
TEL. (305) 264-8100 FAX. (305) 262-6978

COMP-ANL\W03-29CO

'CAR CLAD' ALUM CLAD WOOD FIXED CASEMENT WDW. (N.L.)

CARADCO WOOD WINDOWS & PATIO DOORS
201 EVANS ROAD
RANTOUL, ILLINOIS 61866
TEL (217) 893-4444 FAX (217) 893-0921

revisions:			
no	date	by	description

date: 04-24-03
scale: 1/2" = 1"
dr. by: HAMID
chk. by:

drawing no.
W03-29

sheet 3 of 5

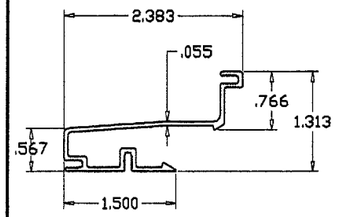

FRAME NOSING

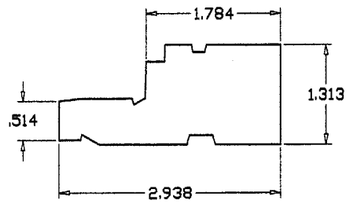

HEAD/SILL/JAMB

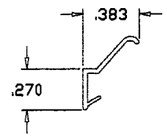

LEAF WEATHERSTRIP

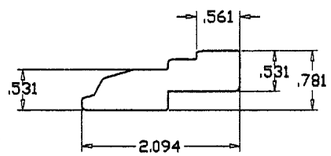

VENT STOP

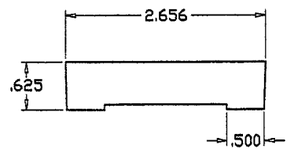

INT. MULLION CASING

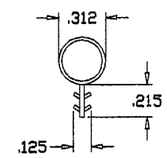

BULB WEATHERSTRIP

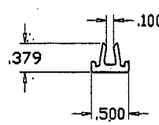

MULLION CONNECTOR

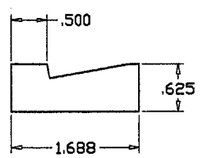

X–JAMB

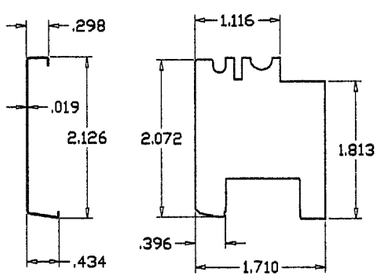

SASH RAIL (INSULATED GLASS)

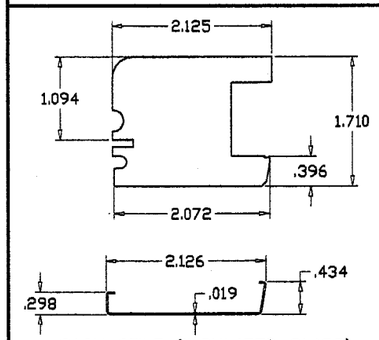

SASH STILE (INSULATED GLASS)

SASH AND OTHER WOOD COMPONENTS TO BE WHITE PINE OR PONDEROSA PINE. FRAME MEMBERS TO BE TIMBERSTRAND.

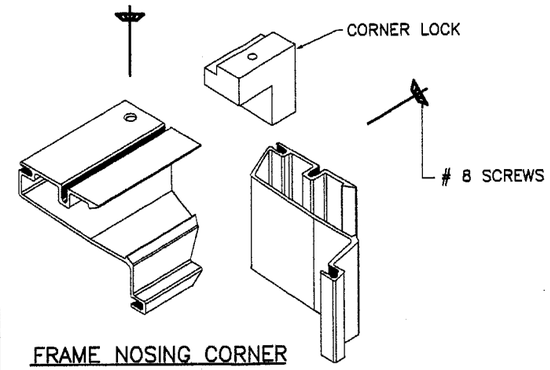

FRAME NOSING CORNER

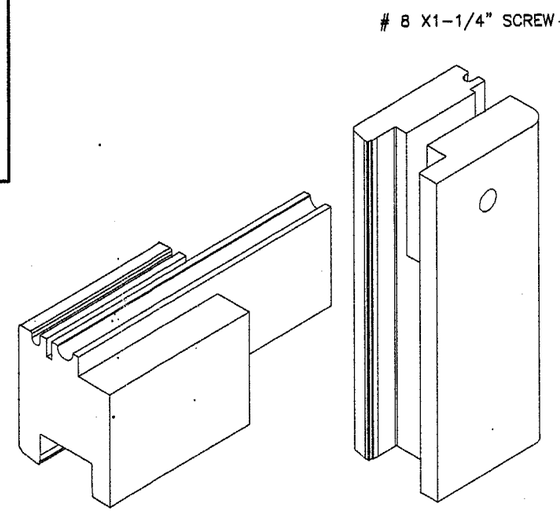

VENT CORNER

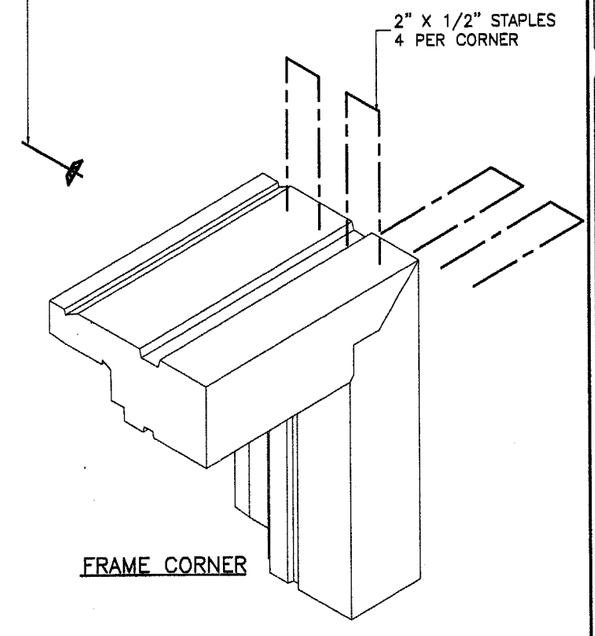

FRAME CORNER

FRAME AND VENT CORNERS SEALED WITH BUTYL TAPE SEALANT. BUTYL CAULK USED IN BETWEEN ALUMINUM/WOOD JOINTS.

PRODUCT REVISED
as complying with the Florida Building Code
Acceptance No 03-0521.02
Expiration Date 07/31/06
By [signature]
Miami Dade Product Control Division

Engr: DR. HUMAYOUN FAROOQ
STRUCTURES
FLA. PE # 16557
C.A.N. 3538

MAY 08 2003

AL–FAROOQ CORPORATION
ENGINEERS, PLANNERS & PRODUCT DESIGN
1235 SW 87 AVE
MIAMI, FLORIDA 33174
TEL. (305) 264–8100 FAX. (305) 262–6978
COMP–ANL\W03–29CO

'CAR CLAD' ALUM CLAD WOOD FIXED CASEMENT WDW. (N.I.)

CARADCO WOOD WINDOWS & PATIO DOORS
201 EVANS ROAD
RANTOUL, ILLINOIS 61866
TEL. (217) 893–4444 FAX (217) 893–0921

revisions:			
no	date	by	description

date: 04–24–03
scale: 1/2" = 1"
dr. by: HAMID
chk. by:

drawing no.
W03–29

sheet 4 of 5

DESIGN LOAD CAPACITY – PSF
(SIDE/SIDE OR TOP/BOTTOM WINDOWS)
OPERATING CASEMENT, FIXED CASEMENT, AWNING OR ANY COMBINATION THEREOF

WINDOW DIMENSIONS		NON-IMPACT WINDOWS (IMPACT RESISTANT SHUTTERS REQUIRED) GLASS TYPE 'A' & 'B'	
WIDTH (W)	HEIGHT (H)	EXT. (+)	INT. (–)
15"	40"	140.0	140.0
20"		140.0	140.0
25"		140.0	140.0
30"		140.0	140.0
35"		140.0	140.0
40"		140.0	140.0
45"		140.0	140.0
50"		140.0	140.0
55"		140.0	140.0
15"	48"	140.0	140.0
20"		140.0	140.0
25"		140.0	140.0
30"		140.0	140.0
35"		127.1	127.1
40"		115.3	115.3
45"		114.5	114.5
50"		114.5	114.5
55"		114.5	114.5
15"	56"	140.0	140.0
20"		140.0	140.0
25"		115.2	115.2
30"		99.0	99.0
35"		88.3	88.3
40"		81.0	81.0
45"		76.2	76.2
50"		73.4	73.4
55"		72.2	72.2
15"	60"	140.0	140.0
20"		117.7	117.7
25"		96.6	96.6
30"		83.2	83.2
35"		74.2	74.2
40"		68.0	68.0
45"		63.8	63.8
50"		61.0	61.0
55"		59.3	59.3
15"	64"	126.4	126.4
20"		96.5	96.5
25"		78.9	78.9
30"		67.7	67.7
35"		60.0	60.0
40"		54.7	54.7
45"		50.9	50.9
50"		48.3	48.3
55"		46.6	46.6
15"	72"	88.4	88.4
20"		67.2	67.2
25"		54.7	54.7
30"		46.6	46.6
35"		41.0	41.0

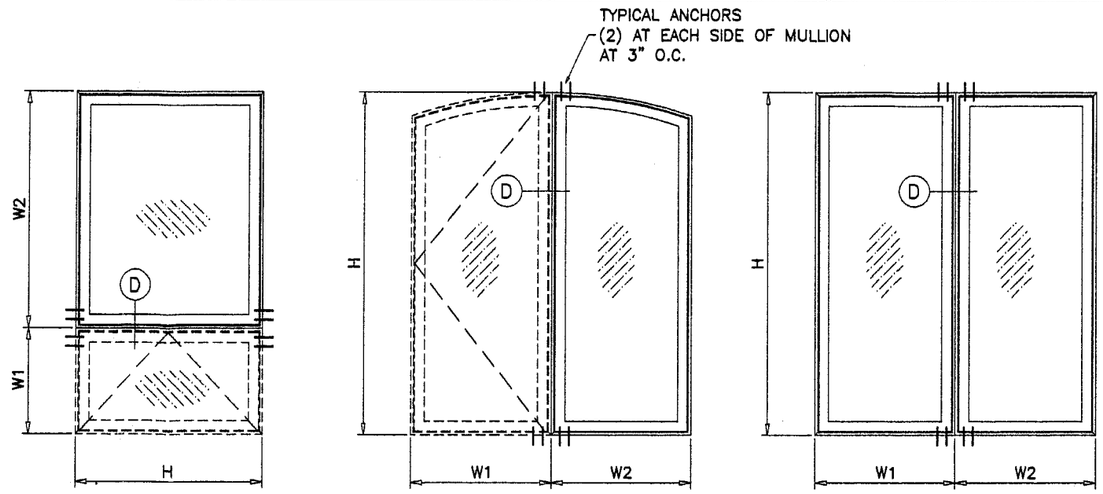

TYPICAL ELEVATIONS
SIDE BY SIDE WINDOWS
SIDE BY SIDE APPLIES TO TWO OR MORE WINDOWS

$$\text{AVG. WINDOW WIDTH} = \frac{W1 + W2}{2}$$

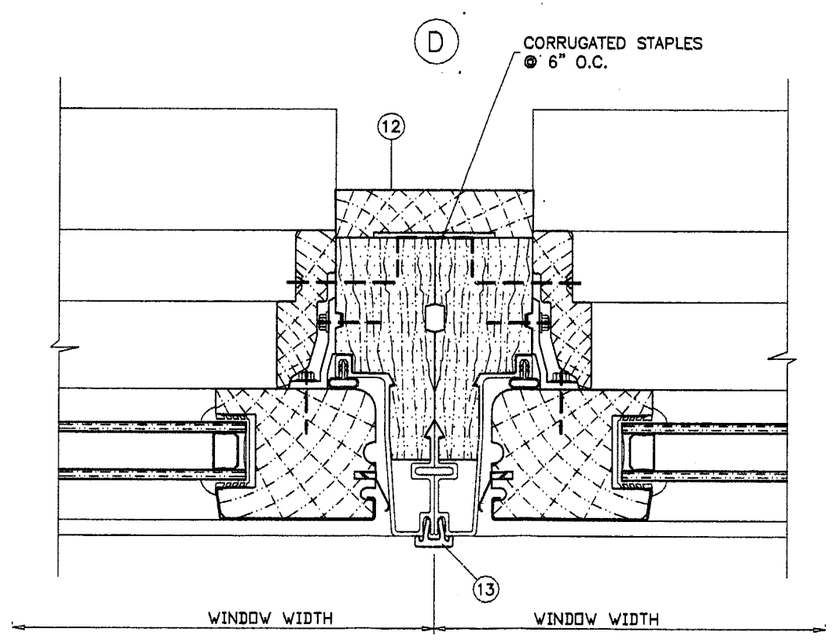

EXTERIOR
VERTICAL OR HORIZONTAL SECTION

NOTES:

1. USE CHART ON THIS SHEET FOR SIDE BY SIDE CONNECTION CAPACITY OF FIXED CASEMENT, OPERATING CASEMENT, AWNING TYPE WINDOW OR ANY COMBINATION OF ABOVE. (WINDOWS WITH IDENTICAL FRAME MEMBERS)
2. FOR FIXED CASEMENT WINDOW CAPACITY SEE SHEET 1. FOR OPERATING CASEMENT OR AWNING TYPE WINDOW CAPACITY SEE THEIR CORRESPONDING NOA.
3. USE SMALLER DESIGN LOAD CAPACITY OF 1 OR 2 ABOVE.

PRODUCT REVISED
as complying with the Florida Building Code
Acceptance No. 03-0521.02
Expiration Date 02/31/06
By
Miami Dade Product Control Division

Engr: DR. HUMAYOUN FAROOQ
STRUCTURES
FLA. PE # 16557
C.A.N. 3538

MAY 8 2003

AL-FAROOQ CORPORATION
ENGINEERS, PLANNERS & PRODUCT DESIGN
1235 SW 87 AVE
MIAMI, FLORIDA 33174
TEL. (305) 264-8100 FAX. (305) 262-6978
COMP-ANL\W03-29CO

'CAR CLAD' ALUM CLAD WOOD FIXED CASEMENT WDW. (N.L.)

CARADCO WOOD WINDOWS & PATIO DOORS
201 EVANS ROAD
RANTOUL, ILLINOIS 61866
TEL. (217) 893-4444 FAX (217) 893-0921

revisions:			
no	date	by	description

date: 04-24-03
scale: 1/2" = 1"
dr. by: HAMID
chk. by:

drawing no.
W03-29