MIAMI-DADE

BUILDING CODE COMPLIANCE OFFICE (BCCO)
PRODUCT CONTROL DIVISION

MIAMI-DADE COUNTY, FLORIDA
METRO-DADE FLAGLER BUILDING
140 WEST FLAGLER STREET, SUITE 1603
MIAMI, FLORIDA 33130-1563
(305) 375-2901 FAX (305) 375-2908

NOTICE OF ACCEPTANCE (NOA)

Best Rolling Doors, Inc.
9780 NW 79th Ave.
Hialeah Gardens, FL 33016

Scope. This NOA is being issued under the applicable rules and regulations governing the use of construction materials. The documentation submitted has been reviewed by Miami-Dade County Product Control Division and accepted by the Board of Rules and Appeals (BORA) to be used in Miami Dade County and other areas where allowed by the Authority Having Jurisdiction (AHJ).

This NOA shall not be valid after the expiration date stated below. The Miami-Dade County Product Control Division (In Miami Dade County) and/or the AHJ (in areas other than Miami Dade County) reserve the right to have this product or material tested for quality assurance purposes. If this product or material fails to perform in the accepted manner, the manufacturer will incur the expense of such testing and the AHJ may immediately revoke, modify, or suspend the use of such product or material within their jurisdiction. BORA reserves the right to revoke this acceptance, if it is determined by Miami-Dade County Product Control Division that this product or material fails to meet the requirements of the applicable building code.

This product is approved as described herein, and has been designed to comply with the High Velocity Hurricane Zone of the Florida Building Code.

DESCRIPTION: 22' Wide Roll-Up Door.

APPROVAL DOCUMENT: Drawing No. 03-099, dated 05/09/03, with last revision on 10/30/03, titled "Roll-Up Door", sheets 1 through 3 of 3, prepared by Tilteco, Inc signed and sealed by W. A. Tillit Jr, PE, bearing the Miami-Dade County Product Control Revision stamp with the Notice of Acceptance number and expiration date by the Miami-Dade County Product Control Division.

MISSILE IMPACT RATING: Large and Small Missile Impact

LIMITATIONS: This approval requires the manufacturer to do testing of all coils used to fabricate door slats under this Notice of Acceptance. A minimum of 2 specimens shall be cut from each coil and tensile tested according to ASTM E-8 by a Miami-Dade County Certified Laboratory selected and paid by the manufacturer. Every 3 months, 4 times a year the manufacturer shall mail to this office a copy of the Test Reports with confirmation that the specimens were selected from coils at the manufacturer's production facilities and a notarized statement from that manufacturer that only coils with yield of 50 ksi or more shall be used to make panels for Miami-Dade County under this Notice of Acceptance.

LABELING: Each unit shall bear a permanent label with the manufacturer's name or logo, city, state and following statement: "Miami-Dade County Product Control Approved", unless otherwise noted herein.

RENEWAL of this NOA shall be considered after a renewal application has been filed and there has been no change in the applicable building code negatively affecting the performance of this product.

TERMINATION of this NOA will occur after the expiration date or if there has been a revision or change in the materials, use, and/or manufacture of the product or process. Misuse of this NOA as an endorsement of any product, for sales, advertising or any other purposes shall automatically terminate this NOA. Failure to comply with any section of this NOA shall be cause for termination and removal of NOA.

ADVERTISEMENT: The NOA number preceded by the words Miami-Dade County, Florida, and followed by the expiration date may be displayed in advertising literature. If any portion of the NOA is displayed, then it shall be done in its entirety.

INSPECTION: A copy of this entire NOA shall be provided to the user by the manufacturer or its distributors and shall be available for inspection at the job site at the request of the Building Official.

This NOA **revises NOA # 01-0129.05** and, consists of this page, evidence page as well as approval document mentioned above.

The submitted documentation was reviewed by **Candido F. Font PE.**

01/15/04

PRODUCT CONTROL ACCEPTED

NOA No 03-0521.04
Expiration Date: March 22, 2006
Approval Date: January 15, 2004
Page 1

Best Rolling Doors, Inc.

NOTICE OF ACCEPTANCE: EVIDENCE PAGE

A DRAWINGS:

1. Drawing prepared by Tilteco, Inc., titled "Roll-Up Door", Drawing No.03-099, dated 05/09/03 with latest revision on 10/30/03, sheets 1 to 3 of 3, signed and sealed by W. A. Tillit Jr. PE.

B TEST:

1 Test report on Large Missile Impact Test, Cyclic Wind Pressure Test and Uniform Static Air Pressure Test for a "Steel Garage Door", prepared by Fenestration Testing Laboratory, Inc., laboratory # 2072, dated 08/26/98, signed and sealed by G. Diamond, PE.

C CALCULATIONS:

1 Calculations for the Attachment of Guide Angles to Wall or Jamb, dated 08/10/98, sheets 1 through 34 of 34, (For 16'-0", 18'-0", 20'-0" & 22'-7" wide doors), signed and sealed by W. A. Tillit Jr, PE.

D STATEMENTS:

1 Test compliance letter, issued by Fenestration Testing Laboratory, Inc. on 09/03/98 and signed by G. Diamond PE.

2 Code compliance letter, issued by Tilteco, Inc. on 09/11/98, signed and sealed by W. A. Tillit Jr. PE.

3 No-financial interest letter, issued by Tilteco, Inc. on 09/11/98, signed and sealed by W. A. Tillit Jr. PE.

E MATERIAL CERTIFICATION:

1. Test report on Tensile Test for flat reduced section of galvanized steel, prepared by ATC Associates, Inc., project No. 13974.0001, dated 08/06/98, signed and sealed by P. Read, PE.
2. Notice of Acceptance # 98-0904.04, issued to Apache Products Company, and expiring on 01/11/2002.
3. Tensile test and affidavit complying with section 5 of the NOA, signed by S. A. Suarez and notarized by M.E. Rivera.

01/15/04

Candido F. Font PE
Senior Product Control Examiner
NOA No 03-0521.04
Expiration Date: March 22, 2006
Approval Date: January 15, 2004

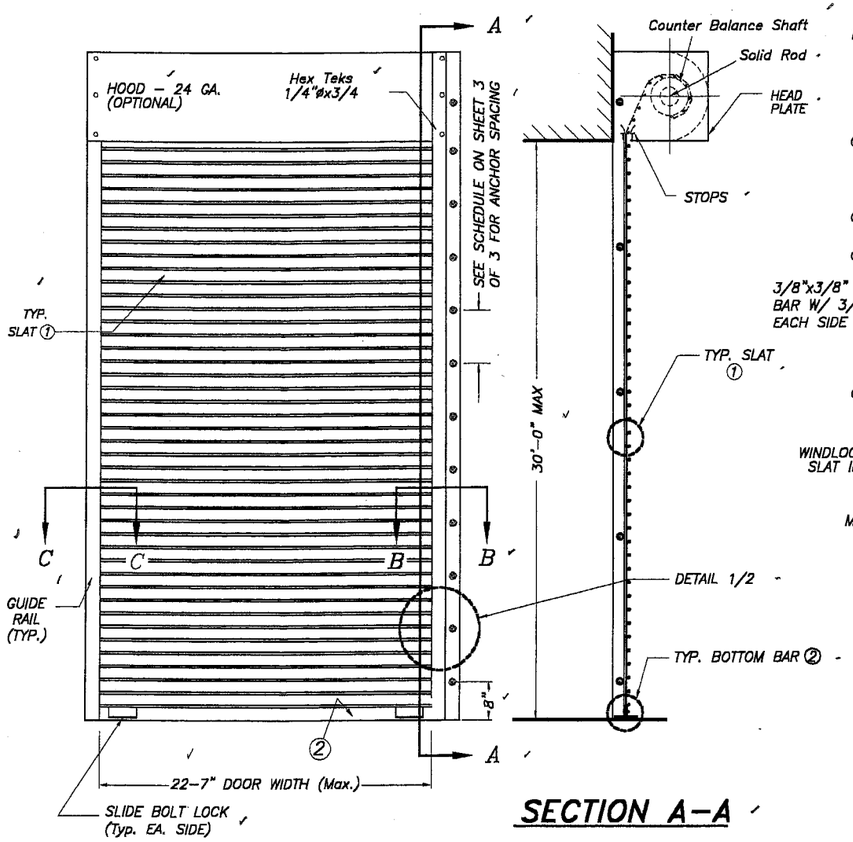

TYPICAL DOOR ELEVATION

N. T. S.

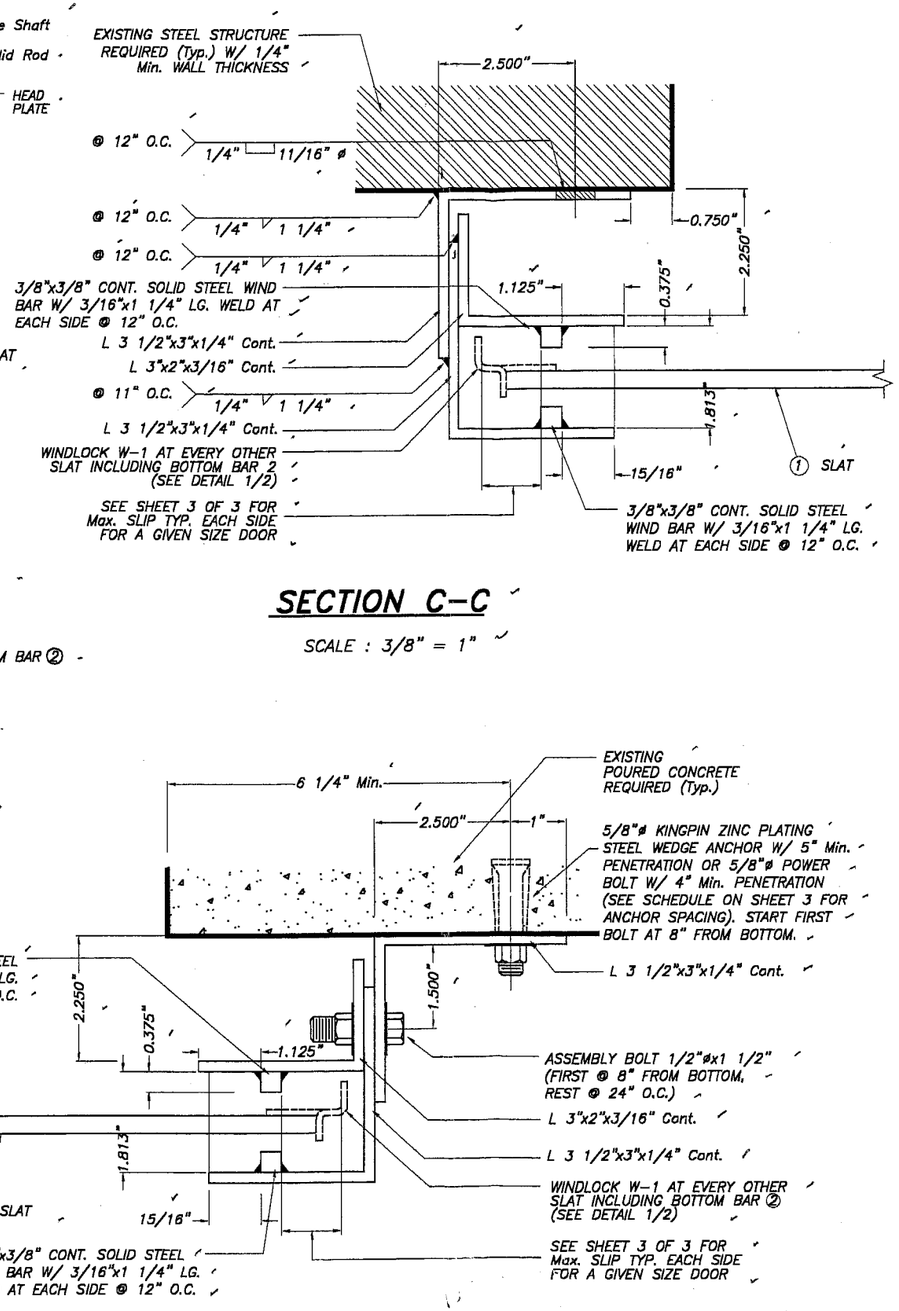

SECTION A–A

N. T. S.

SECTION C–C

SCALE : 3/8" = 1"

SECTION B–B

SCALE : 3/8" = 1"

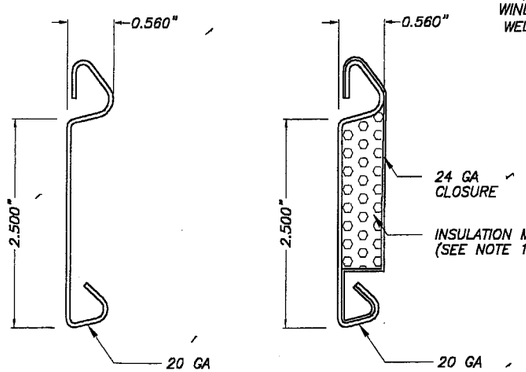

PLAIN **INSULATED**

① FLAT SLAT

SCALE : 1/2" = 1"

GENERAL NOTES:

1– ROLL–UP DOOR SHOWN ON THIS PRODUCT APPROVAL DOCUMENT (P.A.D.) HAS BEEN DESIGNED IN ACCORDANCE WITH THE 2001 EDITION OF THE FLORIDA BUILDING CODE. DESIGN WIND LOADS SHALL BE DETERMINED AS PER SECTION 1619 OF THE ABOVE MENTIONED CODE, FOR A BASIC WIND SPEED OF 146 M.P.H., AND IN ACCORDANCE W/ ASCE 7–98. STANDARD.
ROLL–UP DOOR'S ADEQUACY FOR IMPACT AND FATIGUE RESISTANCE HAS BEEN VERIFIED IN ACCORDANCE WITH SECTION 1606.1.4 OF THE ABOVE MENTIONED CODE AS PER FENESTRATION TESTING LABORATORY, INC. REPORT # 2072 AS PER PA–201, PA–202 & PA–203 STANDARD.

MAX. DESIGN LOADS ARE: +55.0, –55.0 PSF

2– SLAT TO BE A.S.T.M. A–653 GR 50 STRUCTURAL QUALITY STEEL WITH MIN FY = 50.0 KSI AND G–90 GALVANIZING PER A.S.T.M. A–653, OR A.I.S.I. 304 SERIES STAINLESS STEEL MANUFACTURED WITH A MINIMUM YIELD STRENGTH OF FY = 50.0 KSI.

3– ALL STEEL ANGLES TO BE A.S.T.M. A–36 DESIGNATION, SHOP PRIMED AGAINST CORROSION PRIOR TO INSTALLATION.

4– WINDLOCKS TO BE "MALLEABLE IRON" FY=42 KSI OR A.I.S.I. DESIGNATION STEEL WITH FY= 40 KSI.

5– ALL ASSEMBLY BOLTS TO BE S.A.E. GRADE 2 CADMIUM PLATED OR GALVANIZED STEEL.

6– STEEL WINDBARS TO BE A.S.T.M. A–36 DESIGNATION, SHOP PRIMED PRIOR TO INSTALLATION.

7– HOOD TO BE 24 GA. A.S.T.M. A–653 DESIGNATION G–90 FINISH TYPE COATING.

8– ALL RIVETS TO BE A.I.S.I. 1006 STEEL, ZINC PLATED, W/ 48.42 KSI MINIMUM TENSILE STRENGTH.

9– CONCRETE ANCHORS TO BE AS MANUFACTURED BY U. S. ANCHORS CORPORATION OR POWERS FASTENING, INC AND SHALL BE INSTALLED FOLLOWING ALL OF THE RECOMMENDATIONS AND SPECIFICATIONS OF THE ANCHOR'S MANUFACTURER.

10– ALL WELDING TO CONFORM TO AMERICAN WELDING SOCIETY'S AWS D1.1 REGULATIONS. USE A.W.S A5.1 OR A5.5 E60XX ELECTRODES MIN. 3/16" FILLET SIZE.

11– INSULATION MATERIAL SHALL BE EPS–EXPANDED POLYSTYRENE INSULATION, MANUFACTURED BY APACHE PRODUCTS COMPANY, NOTICE OF ACCEPTANCE # 01–1108.09.

12– IT SHALL BE THE RESPONSIBILITY OF THE CONTRACTOR TO VERIFY THAT THE EXISTING STRUCTURE IS DESIGNED TO SUPPORT Vx AND Vy FORCES AT BOTH JAMBS. SEE SHEET 3 OF 3, TABLE 1 FOR Vx & Vy VALUES.

13– ROLL–UP MECHANISM NOT PART OF THIS APPROVAL, BUT SHALL BE CERTIFIED BY AN INDEPENDENT TESTING AGENCY.

14– (A) THIS P.A.D. PREPARED BY THIS ENGINEER IS GENERIC AND DOES NOT PROVIDE INFORMATION FOR A SITE SPECIFIC PROJECT; I.E. WHERE THE SITE CONDITIONS DEVIATE FROM THE P.A.D.

(B) CONTRACTOR TO BE RESPONSIBLE FOR THE SELECTION, PURCHASE AND INSTALLATION OF THIS PRODUCT BASED ON THIS P.A.D. PROVIDED HE/SHE DOES NOT DEVIATE FROM THE CONDITIONS DETAILED ON THIS DOCUMENT. CONSTRUCTION SAFETY AT SITE IS THE CONTRACTOR'S RESPONSIBILITY.

(C) THIS P.A.D. WILL BE CONSIDERED INVALID IF MODIFIED.

(D) SITE SPECIFIC PROJECTS SHALL BE PREPARED BY A FLORIDA REGISTERED ENGINEER OR ARCHITECT WHICH WILL BECOME THE PROFESSIONAL OF RECORD (P.O.R) FOR THE PROJECT AND WHO WILL BE RESPONSIBLE FOR THE PROPER USE OF THE P.A.D.

(E) THIS P.A.D. SHALL COMPLY WITH SECTION 2: 61G15 OF THE FLORIDA ADMINISTRATIVE CODE.

PRODUCT REVISED
as complying with the Florida Building Code
Application No. 03-0521.04
Expiration Date 03/22/06
By
Miami Dade Product Control Division

F.B.C.(H.V.H.Z.)/MIAMI–DADE COUNTY

11/25/03

TILTECO INC.
TILLIT TESTING & ENGINEERING COMPANY
6595 N.W. 36th. St., Ste. 217, VIRGINIA GARDENS, Fl. 33166
Phone : (305)871–1530 . Fax : (305)871–1531
EB–0006719
WALTER A. TILLIT Jr. P. E.
FLORIDA Lic. # 44167

ROLL–UP DOOR

BEST ROLLING DOORS, INC.
9780 N.W. 79th AVENUE
HIALEAH GARDENS, FLORIDA 33016

AS SHOWN SCALE

5/9/03 DATE

03–099 DRAWING No.

REV. NO	DESCRIPTION	DATE	REV. No	DESCRIPTION	DATE
1	OLD 98–199	5/9/03	3	30' Max HEIGHT	12/2/03
2	GENERAL NOTE 13	10/30/03	4		

SHEET 1 OF 3

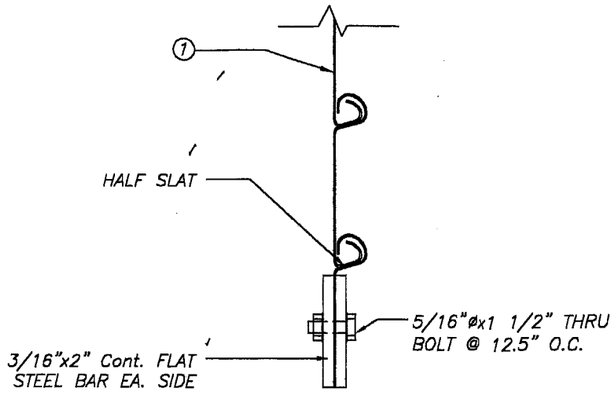

SECTION X1

② BOTTOM BAR DETAIL

SCALE : 3/8" = 1"

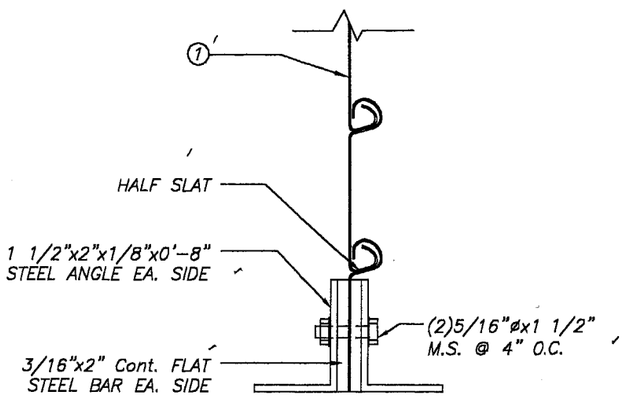

SECTION X2

BOTTOM BAR ② W/ BRACKET DETAIL

SCALE : 3/8" = 1"

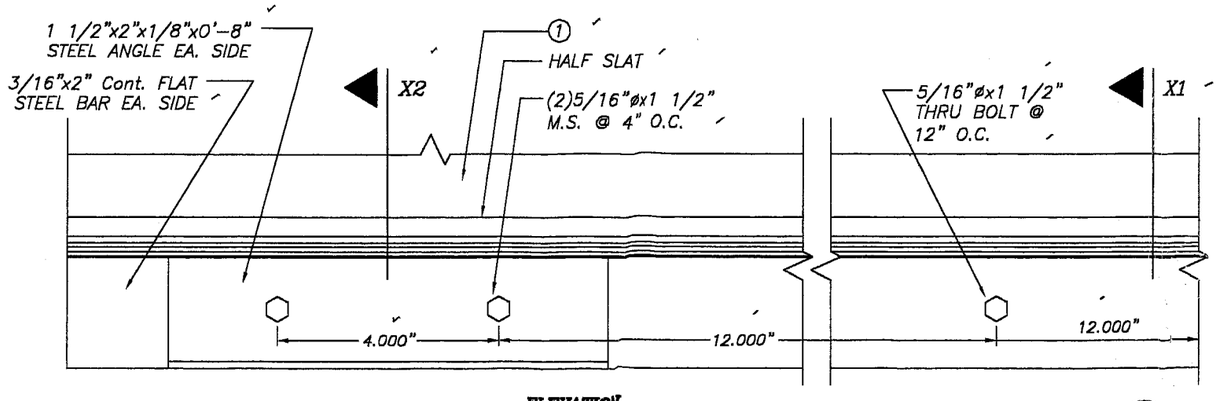

ELEVATION

BOTTOM BAR ② W/ BRACKET

SCALE : 3/8" = 1"

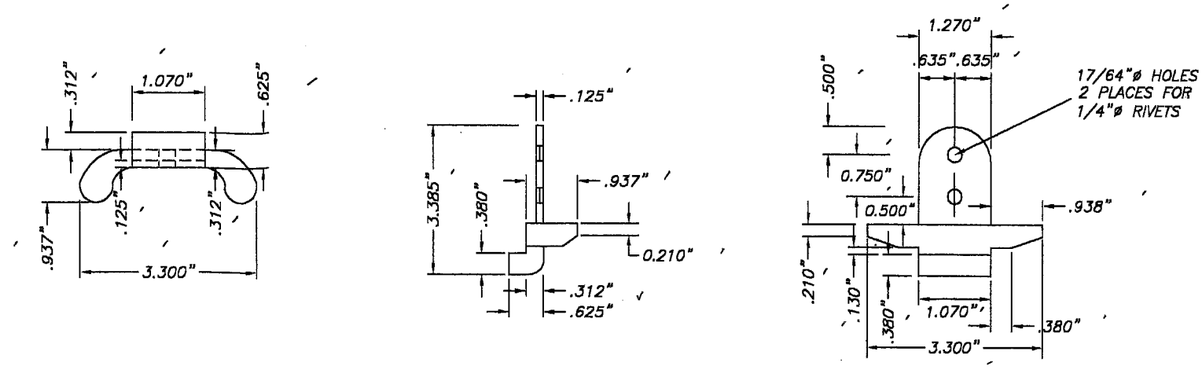

TYPICAL WINDLOCKS W – 1 DETAIL

SCALE : 3/8" = 1"

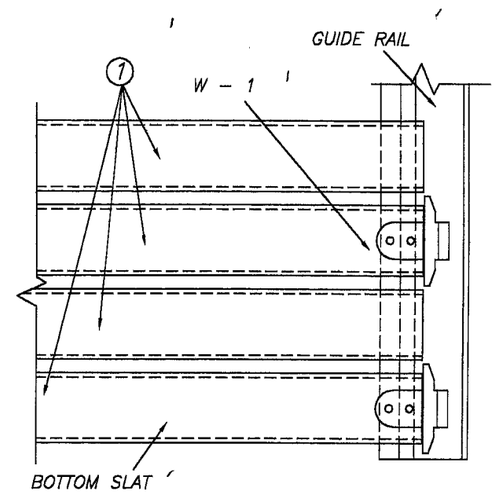

DETAIL 1 (elevation)

N. T. S.

PRODUCT REVISED as complying with the Florida Building Code Acceptance No. 03-0521.04 Expiration Date 03/22/06 By Miami Dade Product Control Division

F.B.C.(H.V.H.Z.)/MIAMI–DADE COUNTY

11/25/03

TILTECO INC.
TILLIT TESTING & ENGINEERING COMPANY
6595 N.W. 36th. St., Ste. 217, VIRGINIA GARDENS, FL 33166
Phone : (305)871–1530 . Fax : (305)871–1531
EB–0006719
WALTER A. TILLIT Jr. P. E.
FLORIDA Lic. # 44167

ROLL–UP DOOR

BEST ROLLING DOORS, INC.
9780 N.W. 79th AVENUE
HIALEAH GARDENS, FLORIDA 33016

REV. NO	DESCRIPTION	DATE	REV. No	DESCRIPTION	DATE
1	OLD 98–199	5/9/03	3	–	–
2	–	–	4	–	–

AS SHOWN SCALE

5/9/03 DATE

03–099 DRAWING No

SHEET 2 OF 3

Vx & Vy REACTIONS & ANCHOR SCHEDULE

MAXIMUM DESIGN LOAD (PSF)	DOOR WIDTH (Ft.)	SLIP (In)	Vx (Lb/Ft)	Vy (Lb/Ft)	ANCHOR SPACING			
					FOR Min. f'c = 2000 psi CONCRETE		FOR Min. f'c = 4000 psi CONCRETE	
					TYPE 1 *	TYPE 2 **	TYPE 1 *	TYPE 2 **
+45.0, −45.0	16–0"	3/4"	1451.7	360.	9"	12"	12"	12"
	18'–0"	1"	1551.5	405.	8 1/2"	12"	11"	12"
	20'–0"	1"	1877.4	450	7"	10 1/2"	9"	12"
	22'–7"	1"	2308.2	508.5	6"	8"	7"	9 1/2"
+50.0, −50.0	16–0"	3/4"	1636.5	400.	7"	11 1/2"	10"	12"
	18'–0"	1"	1742.4	450	6 1/2"	10 1/2"	9 1/2"	12"
	20'–0"	1"	2101	500	5 1/2"	9"	8"	10 1/2"
	22'–7"	1"	2576.4	564.2	4 1/2"	7 1/2"	6 1/2"	8 1/2"
+55.0, −55.0	16–0"	3/4"	1821.2	440	6 1/2"	10 1/2"	9"	12"
	18'–0"	1"	1933.3	495	6"	9 1/2"	8 1/2"	11"
	20'–0"	1"	2324.6	550	5"	8"	7"	9 1/2"
	22'–7"	1"	2844.7	620.95	4"	6 1/2"	6"	7 1/2"

* TYPE 1 ANCHOR : 5/8"ø KINGPIN ZINC PLATING W/ 5" MINIMUM EMBEDMENT.

** TYPE 2 ANCHOR : 5/8"ø POWER BOLT W/ 4" MINIMUM EMBEDMENT.

MAXIMUM SPACINGS FOR f'c = 3000 psi CONCRETE MAY BE INTERPOLATED IN BETWEEN f'c = 2000 psi AND f'c = 4000 psi.

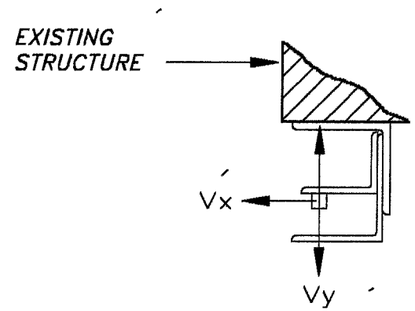

LOAD DIAGRAM

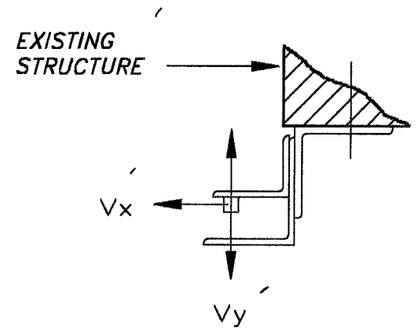

LOAD DIAGRAM

PRODUCT REVISED
as complying with the Florida
Building Code
Acceptance No. 03-0521.04
Expiration Date 03/22/08
By
Miami Dade Product Control
Division

F.B.C.(H.V.H.Z.)/MIAMI–DADE COUNTY

11/25/03

TILTECO INC.
TILLIT TESTING & ENGINEERING COMPANY
6595 N.W. 36th. St., Ste. 217, VIRGINIA GARDENS, Fl. 33166
Phone : (305)871–1530 . Fax : (305)871–1531
EB–0006719
WALTER A. TILLIT Jr. P. E.
FLORIDA Lic. # 44167

ROLL–UP DOOR

BEST ROLLING DOORS, INC.
9780 N.W. 79th AVENUE
HIALEAH GARDENS, FLORIDA 33016

REV. NO	DESCRIPTION	DATE	REV. No	DESCRIPTION	DATE
1	OLD 98–199	5/9/03	3	–	–
2	–	–	4	–	–

AS SHOWN
SCALE

5/9/03
DATE

03–099
DRAWING No

SHEET 3 OF 3