MIAMI-DADE

BUILDING CODE COMPLIANCE OFFICE (BCCO)
PRODUCT CONTROL DIVISION

MIAMI-DADE COUNTY, FLORIDA
METRO-DADE FLAGLER BUILDING
140 WEST FLAGLER STREET, SUITE 1603
MIAMI, FLORIDA 33130-1563
(305) 375-2901 FAX (305) 375-2908

NOTICE OF ACCEPTANCE (NOA)

Robico Shutters, Inc.
4800 S.W. 51st Street
Davie, Florida 33314

SCOPE:

This NOA is being issued under the applicable rules and regulations governing the use of construction materials. The documentation submitted has been reviewed by Miami-Dade County Product Control Division and accepted by the Board of Rules and Appeals (BORA) to be used in Miami Dade County and other areas where allowed by the Authority Having Jurisdiction (AHJ).

This NOA shall not be valid after the expiration date stated below. The Miami-Dade County Product Control Division (In Miami Dade County) and/or the AHJ (in areas other than Miami Dade County) reserve the right to have this product or material tested for quality assurance purposes. If this product or material fails to perform in the accepted manner, the manufacturer will incur the expense of such testing and the AHJ may immediately revoke, modify, or suspend the use of such product or material within their jurisdiction. BORA reserves the right to revoke this acceptance, if it is determined by Miami-Dade County Product Control Division that this product or material fails to meet the requirements of the applicable building code.

This product is approved as described herein, and has been designed to comply with the High Velocity Hurricane Zone of the Florida Building Code.

DESCRIPTION: 0.039" (min.) Galvanized Steel Storm Panel Shutter

APPROVAL DOCUMENT: Drawing No. 03-095, titled " 20 gage Storm Panel ", sheets 1 through 16 of 16, including sheet 11A, total of 17 sheets, prepared by Tilteco, Inc., dated May 15, 2003, last revision #1 dated May 15, 2003, signed and sealed by Walter A. Tillit Jr., P.E. bearing the Miami-Dade County Product Control Revision stamp with the Notice of Acceptance number and expiration date by Miami-Dade County Product Control Division

MISSILE IMPACT RATING: Large and Small Missile Impact

LABELING: Each panel shall bear a permanent label with the manufacturer's name or logo, city, state and the following statement: "Miami-Dade County Product Control Approved", unless otherwise noted herein.

RENEWAL of this NOA shall be considered after a renewal application has been filed and there has been no change in the applicable building code negatively affecting the performance of this product.

TERMINATION of this NOA will occur after the expiration date or if there has been a revision or change in the materials, use, and/or manufacture of the product or process. Misuse of this NOA as an endorsement of any product, for sales, advertising or any other purposes shall automatically terminate this NOA. Failure to comply with any section of this NOA shall be cause for termination and removal of NOA.

ADVERTISEMENT: The NOA number preceded by the words Miami-Dade County, Florida, and followed by the expiration date may be displayed in advertising literature. If any portion of the NOA is displayed, then it shall be done in its entirety.

INSPECTION: A copy of this entire NOA shall be provided to the user by the manufacturer or its distributors and shall be available for inspection at the job site at the request of the Building Official.

This NOA **revises & renews NOA # 00-0307.04** & consists of this page 1 & approval document mentioned above
The submitted documentation was reviewed by **Helmy A. Makar, P.E.**

Helmy A. Makar
07/17/03

PRODUCT CONTROL ACCEPTED

NOA No 03-0521.07
Expiration Date: 06/26/2008
Approval Date: 07/17/2003
Page 1

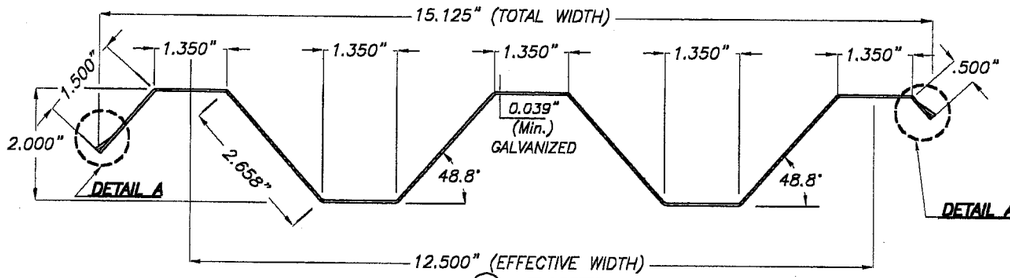

① PANEL

SCALE: 3/8" = 1"

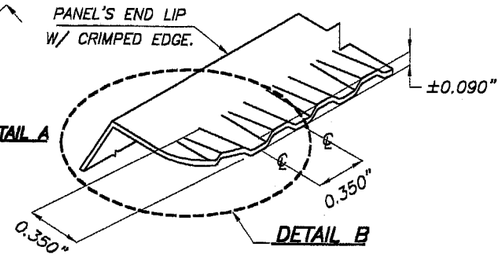

ISOMETRIC VIEW DETAIL A

(N.T.S.)

COMPONENTS

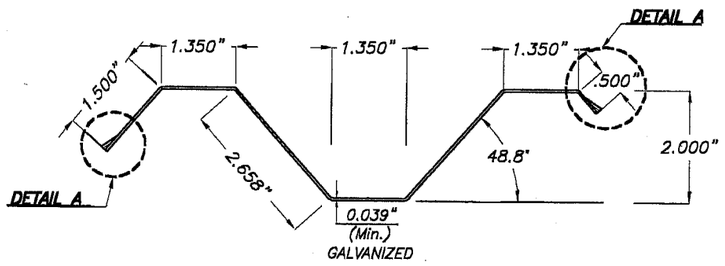

1A END PANEL

SCALE: 3/8" = 1"

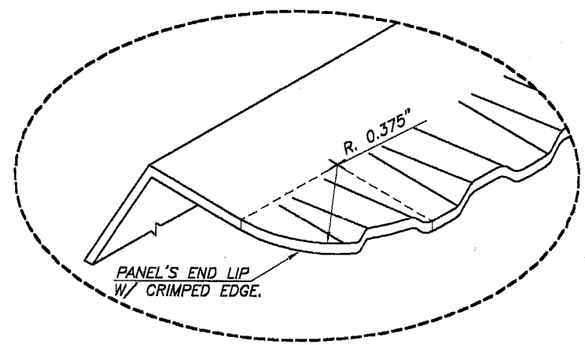

DETAIL B

ROUNDED CORNER @ ENDS OF PANEL'S END LIP W/ CRIMPED EDGE.

(N.T.S.)

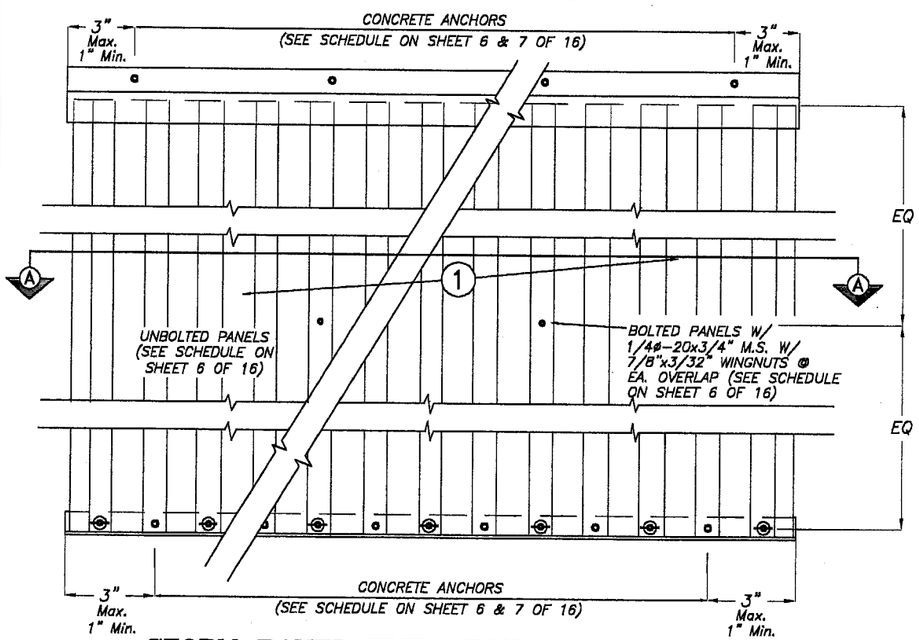

STORM PANEL ELEVATION

SCALE 1/4" = 1"

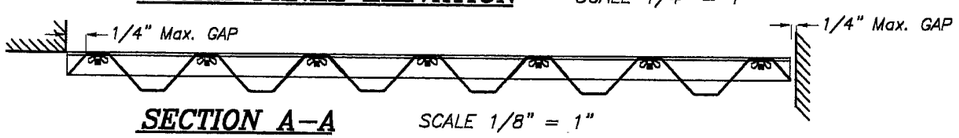

SECTION A-A

SCALE 1/8" = 1"

GENERAL NOTES : VALID FOR 20 GAGE STORM PANEL

1. STORM PANEL SHOWN ON THIS PRODUCT APPROVAL DOCUMENT HAS BEEN VERIFIED FOR CODE COMPLIANCE IN ACCORDANCE WITH THE 2001 EDITION OF THE FLORIDA BUILDING CODE.
DESIGN WIND LOADS SHALL BE DETERMINED AS PER SECTION 1619 OF THE ABOVE MENTIONED CODE, FOR A BASIC WIND SPEED OF 146 m.p.h., AND IN ACCORDANCE W/ ASCE 7-98 STANDARD.
STORM PANEL'S ADEQUACY FOR IMPACT AND FATIGUE RESISTANCE HAS BEEN VERIFIED IN ACCORDANCE WITH SECTIONS 1606.1.4 OF THE ABOVE MENTIONED CODE AS PER PA-201, PA-202 AND PA-203 AS PER HURRICANE ENGINEERING & TESTING INC. REPORTS # 96-569, 96-570 & 96-T30 AND FENESTRATION TESTING LAB. INC., REPORT # 2126.

2. ALL ALUMINUM EXTRUSIONS TO BE 6063-T6 ALLOY. (UNLESS OTHERWISE NOTED)

3. ALL ALUMINUM SHEET METAL USED AT CLOSURES SHALL HAVE 3105-H14 ALLOY.

4. ALL STEEL SHEET METAL PANELS SHALL HAVE STRUCTURAL QUALITY STEEL, ASTM A-653 GRADE 40 MINIMUM, G-60 GALVANIZED STEEL DESIGNATION W/FY= 42.9 ksi (AFTER ROLLED).

5. ALL SCREWS TO BE STAINLESS STEEL 304 OR 316 SERIES OR CORROSION RESISTANT COATED CARBON STEEL AS PER DIN 50018 W/ 50 ksi YIELD POINT AND 90 ksi TENSILE STRENGTH.

6. BOLTS TO BE 2024-T4 ALUMINUM ALLOY, GALVANIZED OR STAINLESS STEEL WITH 36 Ksi MINIMUM YIELD POINT.

7. ANCHORS TO WALL SHALL BE AS FOLLOWS:
(A) TO EXISTING POURED CONCRETE:
- 1/4" ø TAPCON ANCHORS AS MANUFACTURED BY I. T. W. BUILDEX OR ELCO TEXTRON.
- 1/4" ø CF TAP-GRIP ANCHORS, AS MANUFACTURED BY TRU-FAST CORPORATION.
- 1/4" ø x 7/8" CALK-IN ANCHORS OR ELCO male/female PANELMATES AS MANUFACTURED BY POWERS FASTENING INC. AND ELCO TEXTRON, RESPECTIVELY.

NOTES:
A.1) MINIMUM EMBEDMENT OF TAPCON ANCHORS INTO POURED CONCRETE SHALL BE 1 3/4", 1 7/8" FOR ELCO PANELMATES AND FOR CF TAP-GRIP ANCHORS IS 1 1/4".

A.2) 7/8" CALK-IN ANCHORS SHALL BE ENTIRELY EMBEDDED INTO THE POURED CONCRETE. NO EMBEDMENT INTO STUCCO SHALL BE PERMITTED. 1/4" ø-20 SCREWS USED SHALL BE 1 1/2" LONG MINIMUM SHOULD STUCCO EXIST, AND 1" MINIMUM FOR WALLS WITH NO STUCCO, AND MAY BE HEADED SCREWS OR ALL THREADED SCREWS W/O HEAD, BUT WITH WING NUTS.

A.3) IN CASE THAT PRECAST STONE, PRECAST CONCRETE PANELS, PAVERS, STUCCO OR WOOD BANS BE FOUND ON THE EXISTING WALL OR FLOOR, ANCHORS SHALL BE LONG ENOUGH TO REACH THE MAIN STRUCTURE BEHIND SUCH PANELS. ANCHORAGE SHALL BE AS MENTIONED IN A.1) AND IN A.2).

(B) TO EXISTING CONCRETE BLOCK WALL:
- 1/4" ø TAPCON ANCHORS, AS MANUFACTURED BY I. T. W. BUILDEX OR ELCO TEXTRON.
- 1/4" ø CF TAP-GRIP ANCHORS, AS MANUFACTURED BY TRU-FAST CORPORATION.
- 1/4" ø x 7/8" CALK-IN ANCHORS OR ELCO male/female PANELMATES AS MANUFACTURED BY POWERS FASTENING INC. AND ELCO TEXTRON, RESPECTIVELY.

NOTES:
B.1) MINIMUM EMBEDMENT OF TAPCON ANCHORS, ELCO PANELMATES AND CF TAP-GRIP, INTO THE CONCRETE BLOCK UNIT SHALL BE 1 1/4".

B.2) 7/8" CALK-IN ANCHORS SHALL BE ENTIRELY EMBEDDED INTO THE CONCRETE BLOCK UNIT. NO EMBEDMENT INTO STUCCO SHALL BE PERMITTED. 1/4" ø-20 SCREWS USED SHALL BE 1 1/2" LONG MINIMUM SHOULD STUCCO EXIST, AND 1" MINIMUM FOR WALLS WITH NO STUCCO, AND MAY BE HEADED SCREWS OR ALL THREADED SCREWS W/O HEAD, BUT WITH WING NUTS.

B.3) IN CASE THAT PRECAST STONE, OR PRECAST CONCRETE PANELS, STUCCO OR WOOD BANS BE FOUND ON THE EXISTING WALL, ANCHORS SHALL BE LONG ENOUGH TO REACH THE MAIN STRUCTURE BEHIND SUCH PANELS. ANCHORAGE SHALL BE AS MENTIONED IN B.1) AND IN B.2).

(C) ANCHORS SHALL BE INSTALLED FOLLOWING ALL OF THE RECOMMENDATIONS AND SPECIFICATIONS OF THE ANCHOR'S MANUFACTURER.

8. PANELS MAY ALSO BE INSTALLED HORIZONTALLY FOLLOWING INSTALLATION DETAILS SHOWN ON SECTION 1, 2, 2A (BUT ONLY W/ STUDDED ANGLE (4A) & (4B) EA. SIDE) AND 3, 4, 5, 6 & 7 ON SHEET 3 & 4 OF 16, EXCEPT THAT STUDDED ANGLE (4A) SHALL BE USED INSTEAD ON CEILING HEADER (3).

9. IT SHALL BE THE RESPONSIBILITY OF THE CONTRACTOR TO VERIFY THE SOUNDNESS OF THE STRUCTURE WHERE SHUTTER IS TO BE ATTACHED TO INSURE PROPER ANCHORAGE.

10. EACH PANEL W/ LENGTHS OVER 104" SHALL HAVE A LEGIBLE AND READILY VISIBLE MARKING INSTRUCTING OWNER OR TENANT TO SECURE PANELS WITH APPLICABLE REINFORCEMENT DURING PERIODS OF HURRICANE WARNING.

11. (a) THIS PRODUCT APPROVAL DOUCMENT (P.A.D.) PREPARED BY THIS ENGINEER IS GENERIC AND DOES NOT PROVIDE INFORMATION FOR A SITE SPECIFIC PROJECT; i.e. WHERE THE SITE CONDITIONS DEVIATE FROM THE P.A.D.

(b) CONTRACTOR TO BE RESPONSIBLE FOR THE SELECTION, PURCHASE AND INSTALLATION OF THIS PRODUCT BASED ON THIS PRODUCT APPROVAL PROVIDED HE/SHE DOES NOT DEVIATE FROM THE CONDITIONS DETAILED ON THIS DOCUMENT. CONSTRUCTION SAFETY AT SITE IS THE CONTRACTOR'S RESPONSIBILITY.

(c) THIS PRODUCT APPROVAL DOCUMENT WILL BE CONSIDERED INVALID IF MODIFIED.

(d) SITE SPECIFIC PROJECTS SHALL BE PREPARED BY A FLORIDA REGISTERED ENGINEER OR ARCHITECH WHICH WILL BECOME THE PROFESSIONAL OF RECORD (P.O.R.) FOR THE PROJECT AND WHO WILL BE RESPONSIBLE FOR THE PROPER USE OF THE P.A.D.
PROFESSIONAL OF RECORD, ACTING AS A DELEGATED ENGINEER TO THE P.A.D. ENGINEER, SHALL SUBMIT TO THIS THE SITE SPECIFIC DRAWINGS FOR REVIEW.

(e) THIS P.A.D. SHALL BEAR THE DATE AND ORIGINAL SEAL AND SIGNATURE OF THE PROFESSIONAL ENGINEER THAT PREPARED IT.

11. SHUTTER MANUFACTURER'S STAMP SHALL BE PLACED ON THE EXPOSED SURFACE OF THE CENTER FLANGE OF EVERY PANEL APPROXIMATELY 4" ABOVE THE BOTTOM OF SUCH PANEL.
STAMP SHALL READ AS FOLLOWS:
ROBICO SHUTTERS, Inc.
DAVIE, FLORIDA
MIAMI DADE COUNTY PRODUCT CONTROL APPROVED.

PRODUCT REVISED
as complying with the Florida Buiding Code
Acceptance No 03-0521.07
Expiration Date 06/26/2008
By Helmy A. Nelson
Miami Dade Product Control Division

F.B.C.(H.V.H.Z.)/MIAMI-DADE COUNTY

5/20/03

TILTECO INC.
TILLIT TESTING & ENGINEERING COMPANY
6595 N.W. 36th. St., Ste. 217, VIRGINIA GARDENS, FL. 33166
Phone : (305)871-1530 . Fax : (305)871-1531
EB-0006719
WALTER A. TILLIT Jr., P. E.
FLORIDA Lic. # 44167

20 GAGE STORM PANEL

ROBICO SHUTTERS, Inc.
4800 S.W. 51st STREET
DAVIE, FL. 33314

REV. No	DESCRIPTION	DATE	REV. No	DESCRIPTION	DATE
1	OLD 96-297	5/15/03	3	–	–
2	–	–	4	–	–

AS SHOWN SCALE
5/15/03 DATE
03-095 DRAWING No
SHEET 1 OF 16

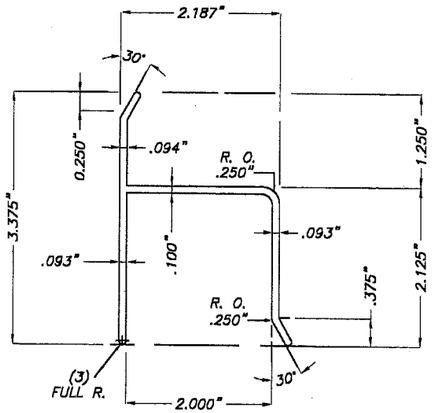

② **"h" HEADER**
SCALE: 1/2" = 1"

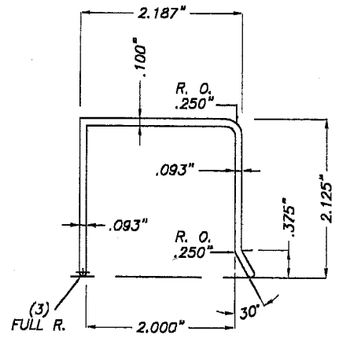

③ **"U" HEADER**
SCALE: 1/2" = 1"

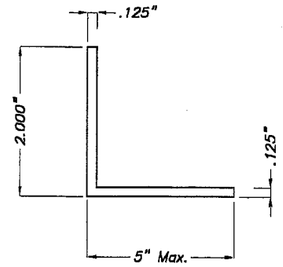

④ **ANGLE**
SCALE: 1/2" = 1"

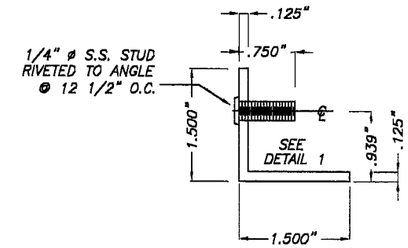

④A **ANGLE WITH STUD**
SCALE: 1/2" = 1"

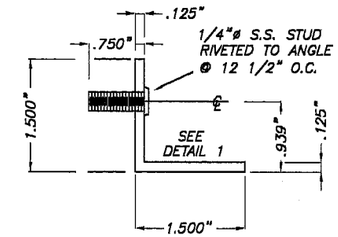

④B **ANGLE WITH REVERSED STUD**
SCALE: 1/2" = 1"

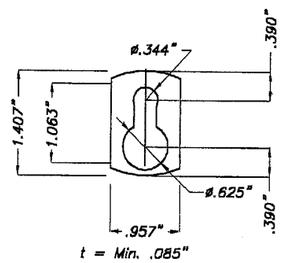

⑤ **KEY HOLE WASHER**
3105-H154 Alum. ALLOY
SCALE: 1/2" = 1"

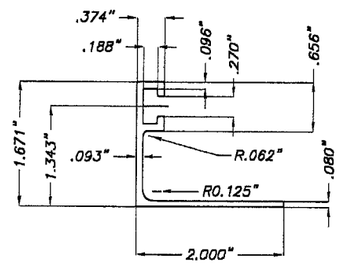

⑥ **"F" TRACK ANGLE**
SCALE : 1/2" = 1"

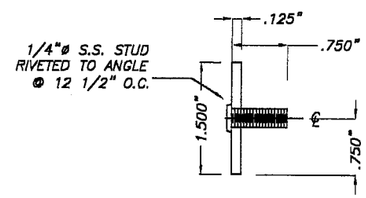

⑦ **FLAT PLATE WITH STUD**
SCALE: 1/2" = 1"

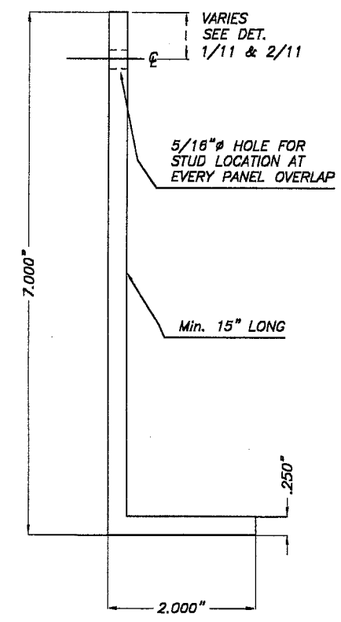

⑧ **2"x7"x1/4" ALUMINUM ANGLE**
SCALE : 1/2" = 1"

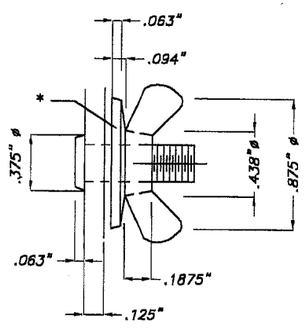

DETAIL 1
SCALE: 2" = 1"

* ALTERNATIVELY, USE WING NUT W/OUT MONOLITHIC WASHER W/ADDITIONAL 7/8"øx3/32" WASHER (STAINLESS STEEL OR NICKEL PLATED STEEL).

COMPONENTS

PRODUCT REVISED
as complying with the Florida Building Code
Acceptance No 03-0521.07
Expiration Date 06/26/2008
By Helena A. Weber
Miami Dade Product Control Division

F.B.C.(H.V.H.Z.)/MIAMI-DADE COUNTY

5/20/03

TILTECO INC.
TILLIT TESTING & ENGINEERING COMPANY
6595 N.W. 36th. St., Ste. 217, VIRGINIA GARDENS, FL. 33166
Phone : (305)871-1530 . Fax : (305)871-1531
EB-0006719
WALTER A. TILLIT Jr., P. E.
FLORIDA Lic. # 44167

20 GAGE STORM PANEL

ROBICO SHUTTERS, Inc.
4800 S.W. 51st STREET
DAVIE, FL. 33314

REV. No	DESCRIPTION	DATE	REV. No	DESCRIPTION	DATE
1	OLD 98-297	5/15/03	3	–	–
2	–	–	4	–	–

AS SHOWN SCALE
5/15/03 DATE
03-095 DRAWING No
SHEET 2 OF 16

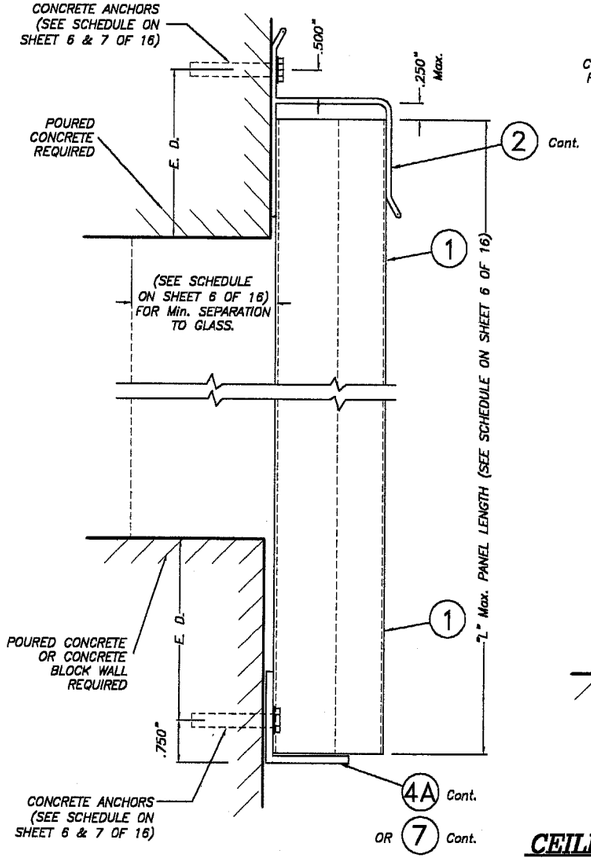

SECTION @ ANCHOR

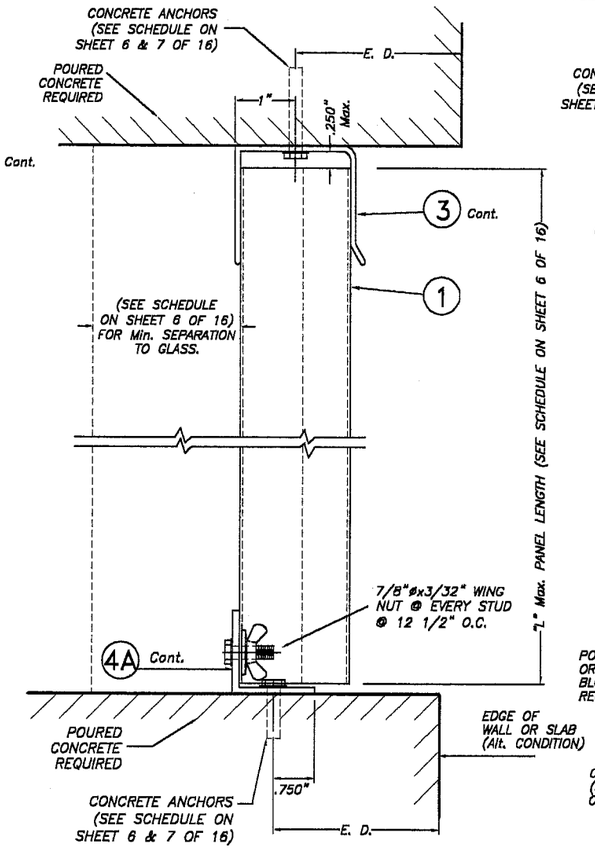

CEILING AND FLOOR MOUNT. INSTALLAT. – SECTION 2

SCALE: 3/8" = 1"

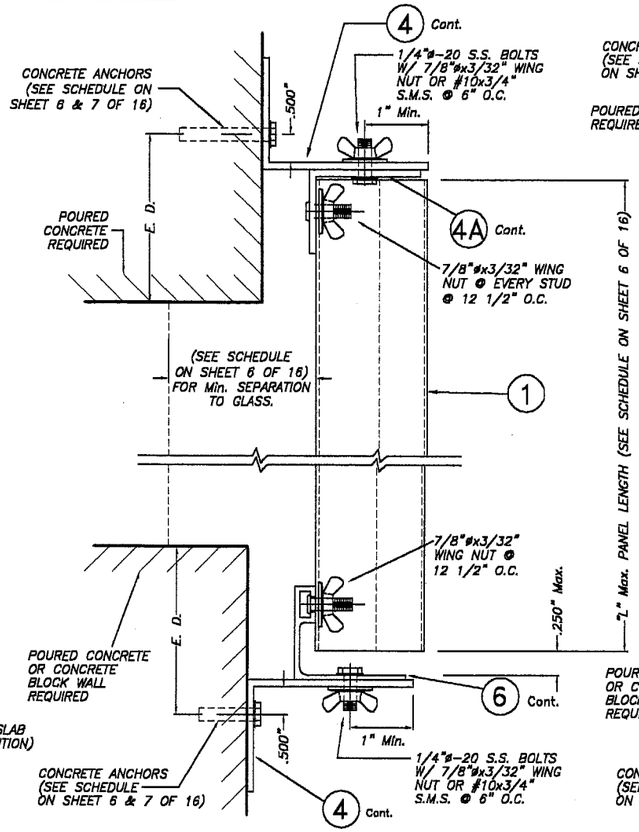

BUILD OUT MOUNTING INSTALLATION – SECTION 3

SCALE: 3/8" = 1"

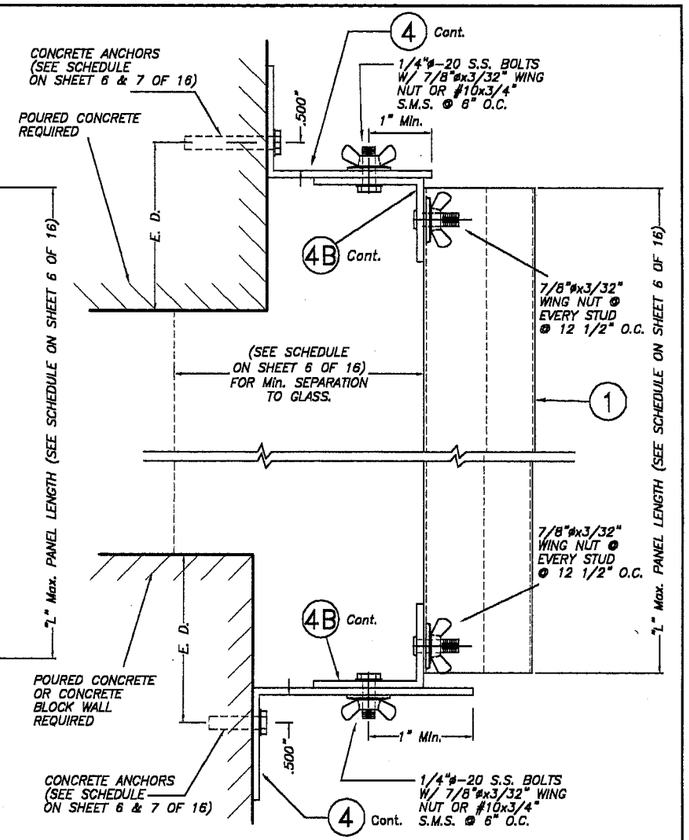

ALTERNATE BUILD-OUT MOUNT. INSTALLAT. – SECTION 4

SCALE: 3/8" = 1"

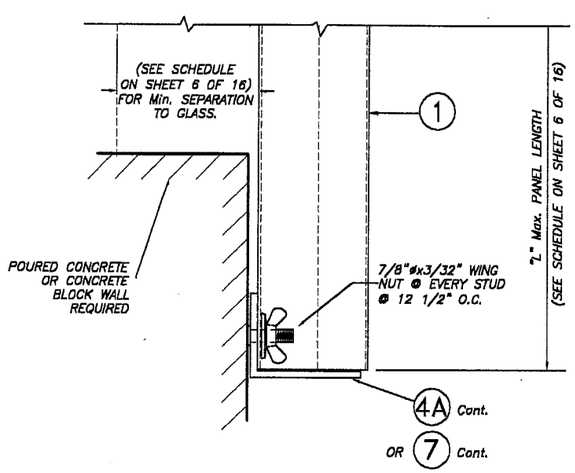

SECTION @ STUD

WALL MOUNTING INSTALLATION – SECTION 1

SCALE: 3/8" = 1"

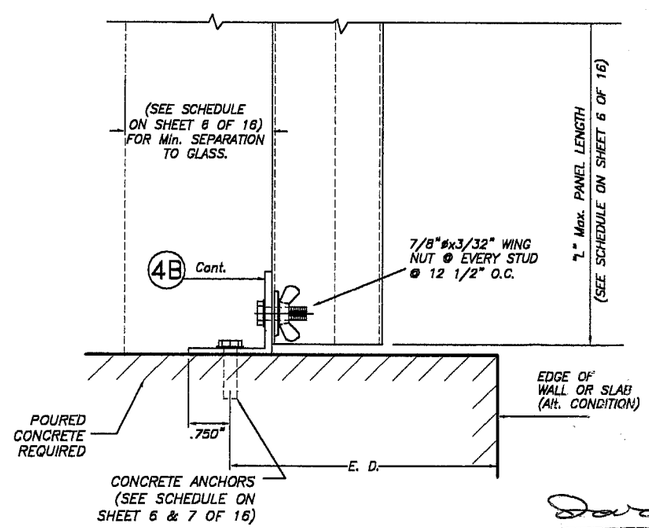

CEILING AND FLOOR MOUNTING INSTALLATION – SECTION 2A

SCALE: 3/8" = 1"

5/20/03

E. D. = EDGE DISTANCE (SEE SCHEDULE ON SHEET 6 OF 16)

NOTE FOR COMBINATION OF SECTIONS :

MOUNTING SHOWN ON SECTIONS 1 THROUGH 4 CAN BE COMBINED IN ANY WAY TO SUIT ANY INSTALLATION.

PRODUCT REVISED
as complying with the Florida Buiding Code
Acceptance No 03-0521.07
Expiration Date 06/26/2008
By Helmy A. Nolan
Miami Dade Product Control Division

F.B.C.(H.V.H.Z.)/MIAMI-DADE COUNTY

TILTECO INC.
TILLIT TESTING & ENGINEERING COMPANY
6595 N.W. 36th. St., Ste. 217, VIRGINIA GARDENS, Fl. 33166
Phone : (305)871-1530 . Fax : (305)871-1531
EB-0006719
WALTER A. TILLIT Jr., P. E.
FLORIDA Lic. # 44167

20 GAGE STORM PANEL

ROBICO SHUTTERS, Inc.
4800 S.W. 51st STREET
DAVIE, FL. 33314

REV. No	DESCRIPTION	DATE	REV. No	DESCRIPTION	DATE
1	OLD 96-297	5/15/03	3	–	–
2	–	–	4	–	–

AS SHOWN SCALE
5/15/03 DATE
03-095 DRAWING No
SHEET 3 OF 16

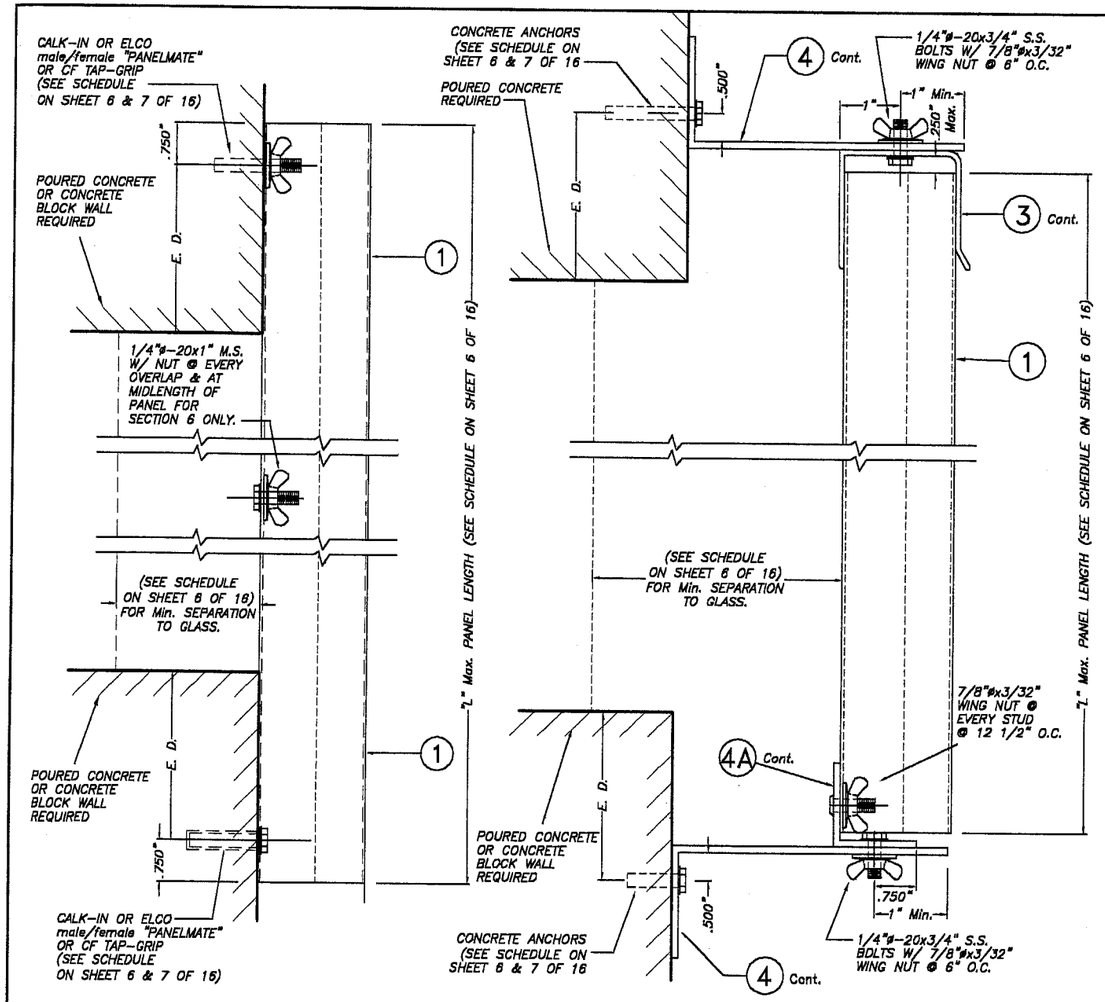

WALL MOUNTING INSTALLATION (D. M.) – SECTIONS 5 & 6

SCALE: 3/8" = 1"

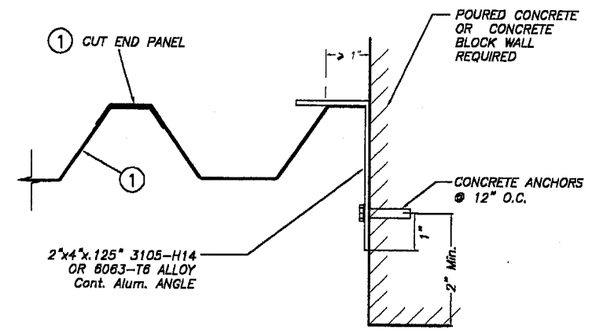

CASE A (Plan)

SCALE: 1/4" = 1"

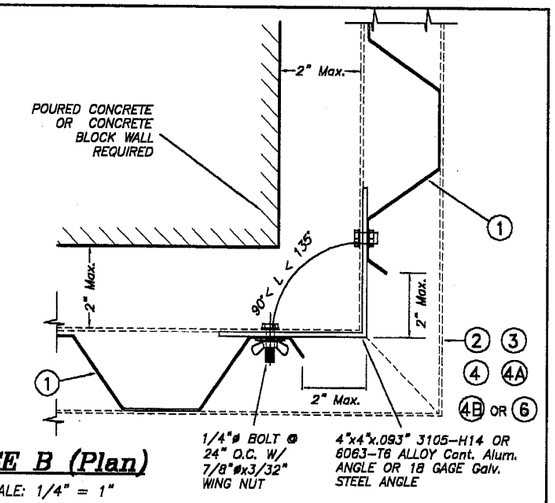

CASE B (Plan)

SCALE: 1/4" = 1"

END CLOSURES DETAILS

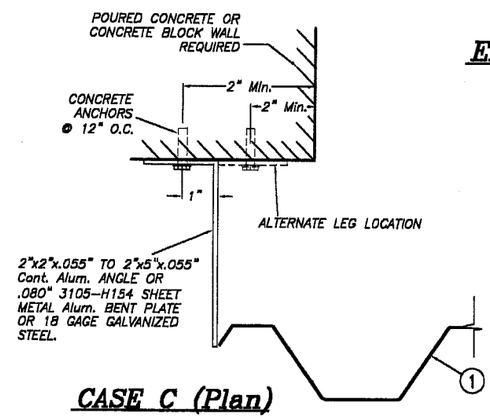

CASE C (Plan)

SCALE: 1/4" = 1"

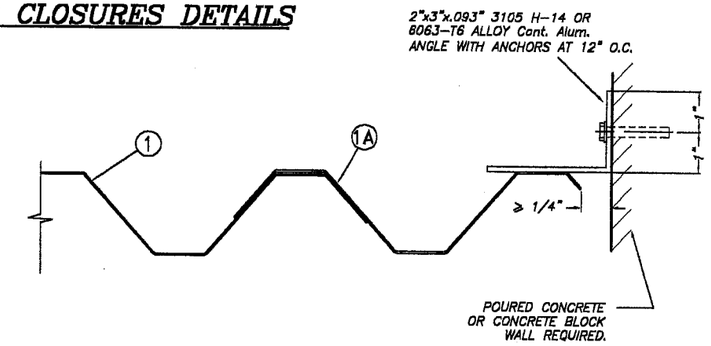

CASE D (Plan)

SCALE: 1/4" = 1"

WALL MOUNTING INSTALLATION BUILD-OUT- SECTION 7

SCALE: 3/8" = 1"

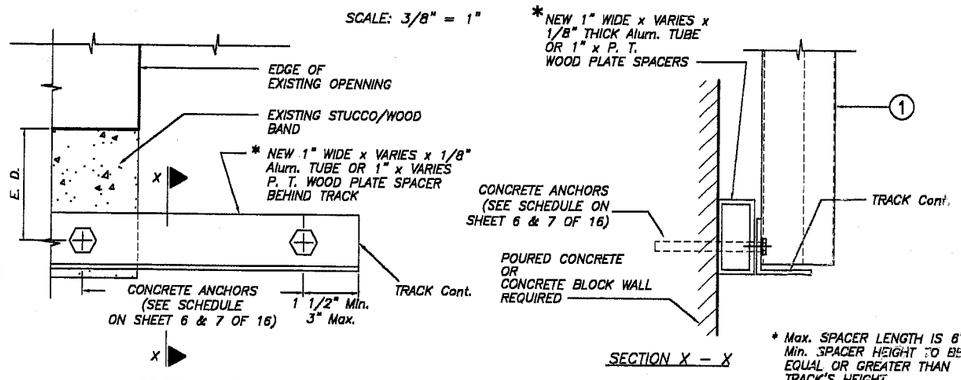

E. D. = EDGE DISTANCE (SEE SCHEDULE ON SHEET 6 OF 16)

NOTE FOR COMBINATION OF SECTIONS :

MOUNTINGS SHOWN ON SECTIONS 5 THROUGH 7 CAN BE COMBINED IN ANY WAY TO SUIT ANY INSTALLATION.

DETAIL FOR SPACERS REQUIRED AT TOP OR BOTTOM TRACKS ADJACENT TO STUCCO/WOOD BANDS

* Max. SPACER LENGTH IS 6". Min. SPACER HEIGHT TO BE EQUAL OR GREATER THAN TRACK'S HEIGHT.

SCALE: 1/4" = 1"

5/20/03

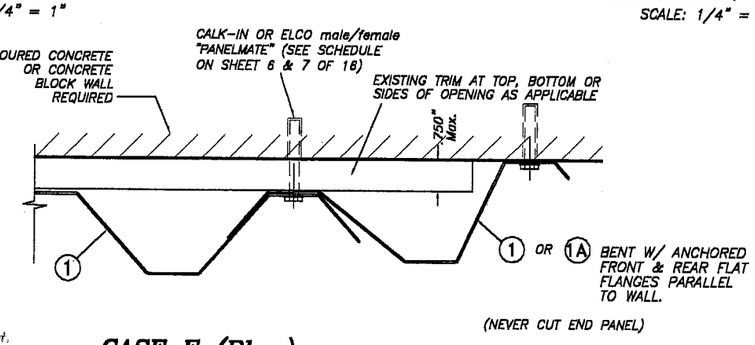

CASE E (Plan)

SCALE: 1/4" = 1"

VALID FOR DIRECT MOUNT INSTALLATION ONLY & CERTIFIED PANEL INSTALLATION AT WALLS W/ SURFACE LEVEL VARIATIONS WITHIN 3/4"

PRODUCT REVISED
as complying with the Florida Buiding Code
Acceptance No 03-0521.07
Expiration Date 06/26/2008
By Helena A. Molina
Miami Dade Product Control Division

F.B.C.(H.V.H.Z.)/MIAMI-DADE COUNTY

TILTECO INC.
TILLIT TESTING & ENGINEERING COMPANY
6595 N.W. 36th. St., Ste. 217, VIRGINIA GARDENS, FL 33166
Phone : (305)871-1530 . Fax : (305)871-1531
EB-0006719
WALTER A. TILLIT Jr., P. E.
FLORIDA Lic. # 44167

20 GAGE STORM PANEL

ROBICO SHUTTERS, Inc.
4800 S.W. 51st STREET
DAVIE, FL. 33314

REV. No	DESCRIPTION	DATE	REV. No	DESCRIPTION	DATE
1	OLD 06-297	5/15/03	3	–	–
2	–	–	4	–	–

AS SHOWN SCALE

5/15/03 DATE

03-095 DRAWING No

SHEET 4 OF 16

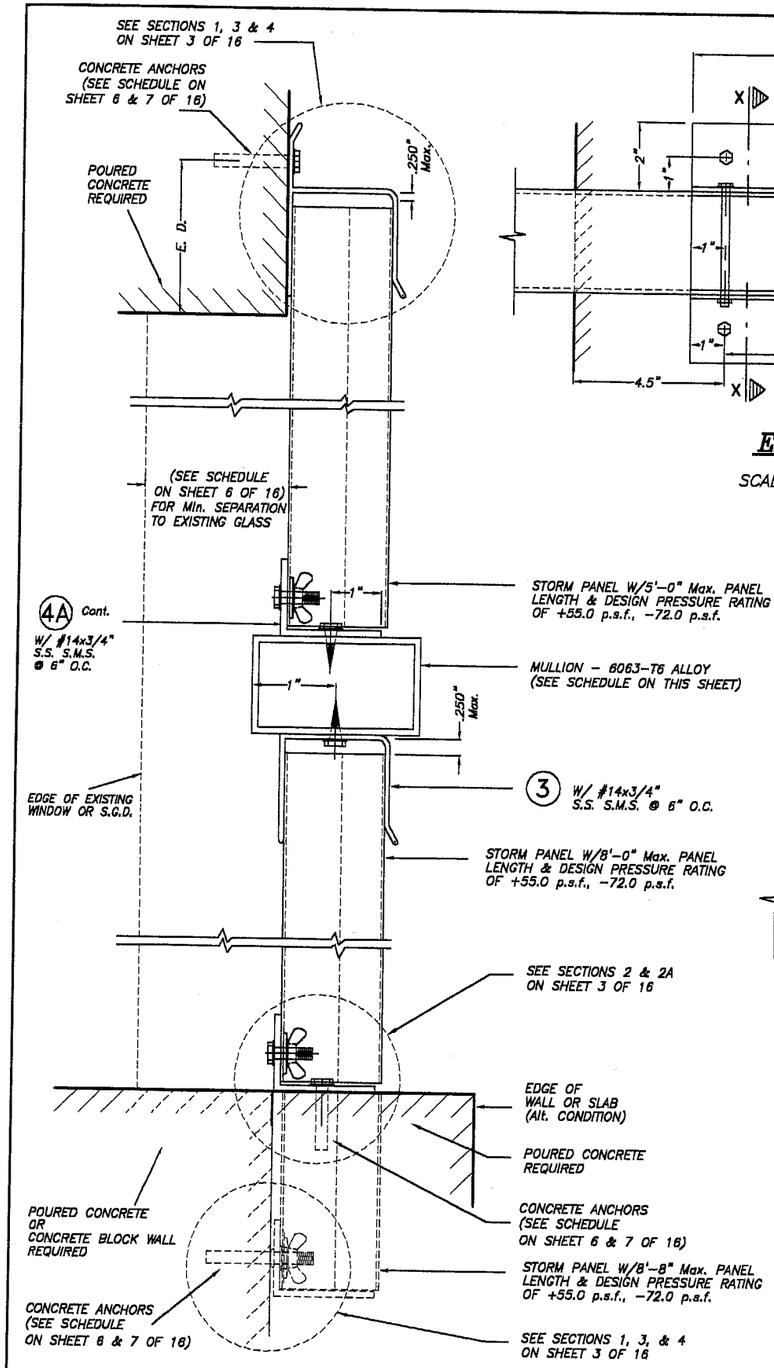

WALL AND FLOOR MOUNTING INSTALLATION FOR SPLIT PANELS – SECTION 1

SCALE: 3/8" = 1"

NOTE: MULLION CAN ALSO BE INSTALLED W/O STORM PANELS ON TOP OR BOTTOM SO THAT IT IS LOCATED AT TOP OR BOTTOM OF OPENING. (ONE PANEL OPENING W/ TUBE TOP & BOTTOM)

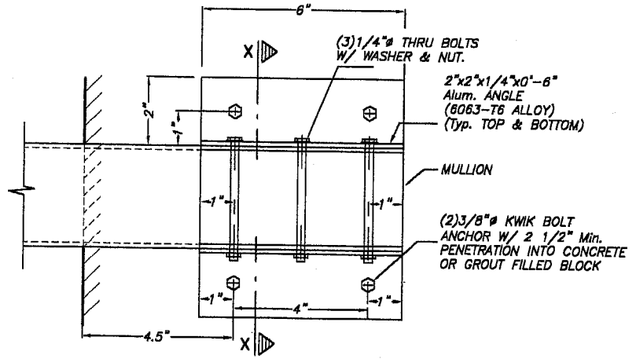

ELEVATION

SCALE: 1/4" = 1"

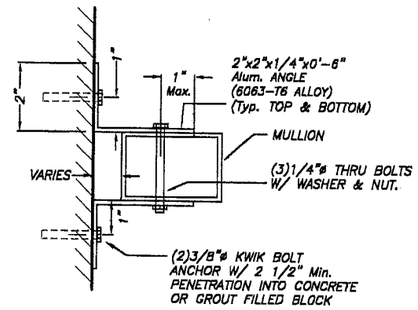

SECTION X-X

SCALE: 1/4" = 1"

DETAIL 1

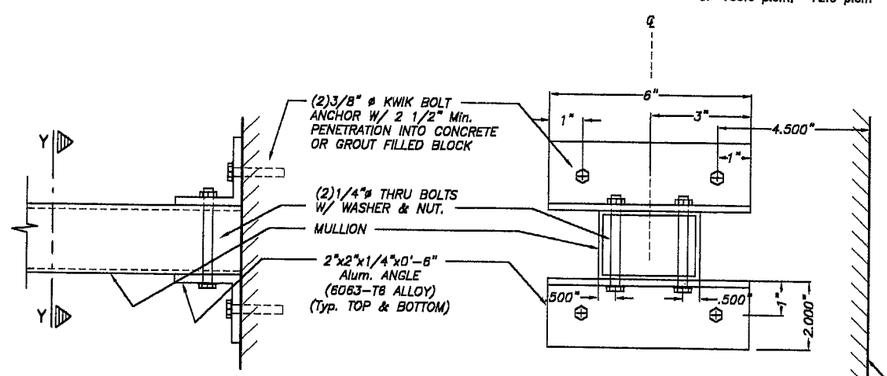

ELEVATION

SCALE: 1/4" = 1"

SECTION Y-Y

SCALE: 1/4" = 1"

DETAIL 2

MULLION SCHEDULE

Max. MULLION SPAN (Ft.) *	REQUIRED Min. TUBE MULLION **
≤ 4'-6"	2" x 3" x 1/8"
> 4'-6" TO 5'-8"	2" x 4" x 1/8"
≥ 5'-8" TO 6'-10"	2" x 5" x 1/8", 2" x 4" x 1/4"
≥ 6'-10" TO 8'-0"	2" x 6" x 1/8"

* SPANS VALID FOR DESIGN PRESSURE RATING LOADS OF +55.0 p.s.f., -72.0 p.s.f.

** MINIMUM TUBE'S DIMENSION SHALL BE ORIENTED PARALLEL TO STORM PANEL'S LENGTH.

5/20/03

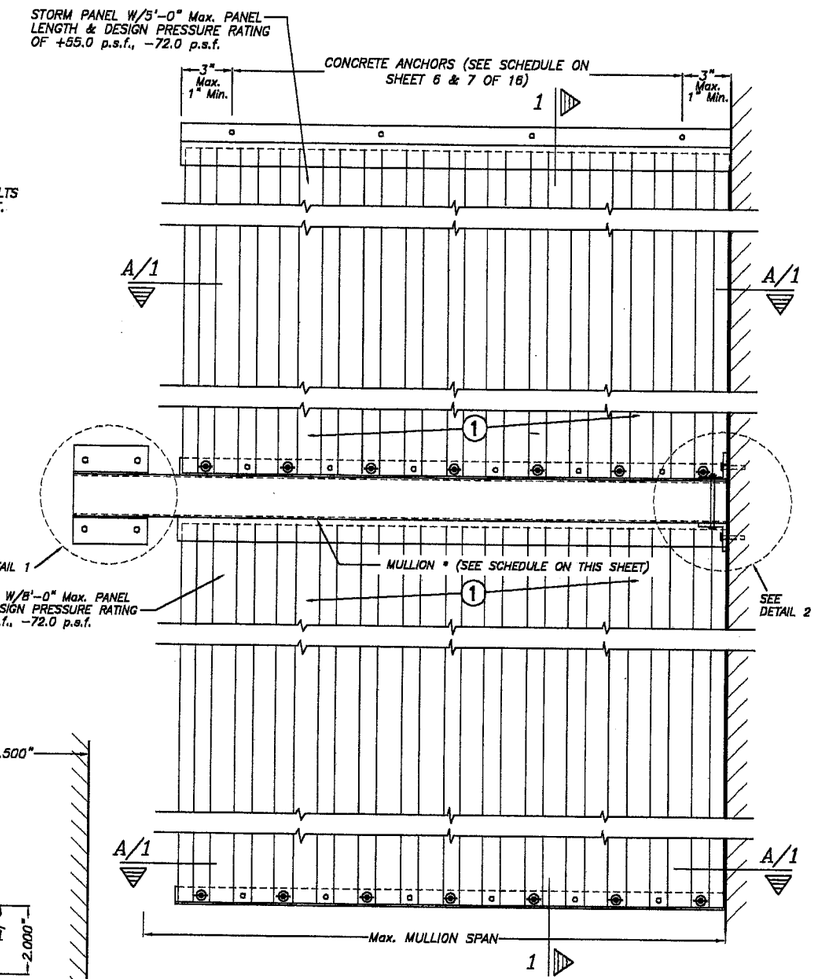

SPLIT STORM PANEL ELEVATION

SCALE 1/8" = 1"

PRODUCT REVISED
as complying with the Florida Building Code
Acceptance No 03-0521.07
Expiration Date 06/26/2008
By Helena A. Molina
Miami Dade Product Control Division

F.B.C.(H.V.H.Z.)/MIAMI-DADE COUNTY

TILTECO INC.
TILLIT TESTING & ENGINEERING COMPANY
8595 N.W. 36th. St., Ste. 217, VIRGINIA GARDENS, FL. 33166
Phone : (305)871-1530 . Fax : (305)871-1531
EB-0006719
WALTER A. TILLIT Jr., P. E.
FLORIDA Lic. # 44167

20 GAGE STORM PANEL

ROBICO SHUTTERS, Inc.
4800 S.W. 51st STREET
DAVIE, FL. 33314

REV. No	DESCRIPTION	DATE	REV. No	DESCRIPTION	DATE
1	OLD 96-297	5/15/03	3	–	–
2	–	–	4	–	–

AS SHOWN SCALE

5/15/03 DATE

03-095 DRAWING No

SHEET 5 OF 16

MAXIMUM DESIGN PRESSURE RATING "W" (p.s.f.) AND CORRESPONDING MAXIMUM PANEL LENGTH "L" SCHEDULE

(VALID ONLY FOR PANEL INSTALLATIONS AS PER SECTIONS 1 THRU 7, ON SHEETS 3 & 4 OF 16)

MAXIMUM DESIGN PRESSURE RATING W (p.s.f.)	Max. PANEL LENGTH L (ft.) (SEE SECTIONS)	MINIMUM SEPARATION TO GLASS	PANEL CONDITION	APPLICABLE TO SECTIONS # AND ANY COMBINATION OF THEM
+55.5, −72.0	7'−5" OR LESS	2 1/4"	UNBOLTED	1 THRU 5 & 7
+55.5, −72.0	>7'−5" TO 8'−8" Max.	2 3/4"	UNBOLTED	1 THRU 5 & 7
+55.0, −72.0	>8'−8" TO 11'−2" Max.	2 1/2"	* BOLTED AT MIDLENGTH AT OVERLAPS	6

* BOLTED W/ 1/4"ø−20x1" S.S. M.S. & WINGNUT AT OVERLAP & MIDLENGTH OF PANEL.

MAXIMUM DESIGN PRESSURE RATING "W" (p.s.f.) AND CORRESPONDING MAXIMUM ANCHOR SPACING SCHEDULE FOR INSTALLATIONS INTO CONCRETE AND C.B.S. STRUCTURES *

(VALID ONLY FOR PANEL INSTALLATIONS AS PER SECTIONS 1 THRU 7, ON SHEETS 3 & 4 OF 16)

MAXIMUM DESIGN LOAD W (p.s.f.)	MAXIMUM ANCHORS SPACING FOR E. D. = 3 1/2" **								APPLICABLE TO SECTIONS # & ANY COMBINATION OF THEM	MAXIMUM PANEL LENGTH "L" (ft.)
	TAPCONS		CF TAP−GRIP		CALK−IN		PANELMATES			
	TO CONCRETE	TO MASONRY	TO CONCRETE	TO MASONRY	TO CONCRETE	TO MASONRY	TO CONCRETE	TO MASONRY		
+55.5, −72.0	6"	N/A	N/A	N/A	6"	N/A	6"	N/A	1 (TOP)	7'−5" OR LESS
	6"	6"	N/A	N/A	6"	6"	6"	6"	1 (BOTTOM)	
	6"	N/A	N/A	N/A	6"	N/A	6"	N/A	2 (TOP)	
	6"	N/A	N/A	N/A	6"	N/A	5"	N/A	2 (BOTTOM)	
	6"	N/A	N/A	N/A	6"	N/A	6"	N/A	3 (TOP)	
	6"	6"	N/A	N/A	6"	6"	6"	6"	3 (BOTTOM)	
	6"	N/A	N/A	N/A	6"	N/A	6"	N/A	4 & 7 (TOP)	
	6"	6"	N/A	N/A	6"	6"	6"	6"	4 & 7 (BOTTOM)	
	N/A	N/A	6 1/4"	6 1/4"	12 1/2"	12 1/2"	6 1/4"	6 1/4"	5 (TOP/BOTTOM)	

— SEE SHEET 8 & 9 OF 16 FOR ANCHORS TYPE & SPACING FOR INSTALLATIONS INTO WOOD FRAME BUILDINGS.

** MAXIMUM ANCHOR SPACINGS ARE VALID FOR 3 1/2" EDGE DISTANCE. FOR E. D. LESS THAN 3 1/2", REDUCE ANCHOR SPACING BY MULTIPLYING SPACING SHOWN ON SCHEDULE BY THE FOLLOWING FACTORS. (NOTE : Min. E. D. FOR CALK−IN ANCHORS IS 2 1/2").
FOR THIS OPERATION TO BE POSIBLE, REDUCED SPACING OBTAINED USING FACTOR SHALL NOT BE LESS THAN MINIMUM SPACING INDICATED FOR EACH ANCHOR TYPE AT ANCHORS LEGEND.

ACTUAL E. D.	FACTOR		
	TAPCON/ PANELMATES	CALK−IN	CF TAP−GRIP
3"	.86	.75	1.00
2 1/2"	.71	.50	.80
2"	.50	–	–

ANCHORS LEGEND

ANCHORS TYPE	ANCHOR MIN. SPACING
TAPCON/ PANELMATES	3.0"
CALK−IN	2.5"
CF TAP−GRIP	3.0"

E. D. = EDGE DISTANCE

PRODUCT REVISED
as complying with the Florida Buiding Code
Acceptance No 03−0521.07
Expiration Date 06/26/2008
By Helena A. Molina
Miami Dade Product Control Division

5/20/03

F.B.C.(H.V.H.Z.)/MIAMI−DADE COUNTY

TILTECO INC.
TILLIT TESTING & ENGINEERING COMPANY
6595 N.W. 36th. St., Ste. 217, VIRGINIA GARDENS, Fl. 33166
Phone : (305)871−1530 . Fax : (305)871−1531
EB−0006719
WALTER A. TILLIT Jr., P. E.
FLORIDA Lic. # 44167

20 GAGE STORM PANEL

ROBICO SHUTTERS, Inc.
4800 S.W. 51st STREET
DAVIE, FL. 33314

REV. No	DESCRIPTION	DATE	REV. No	DESCRIPTION	DATE
1	OLD 96−297	5/15/03	3	–	–
2	–	–	4	–	–

AS SHOWN SCALE
5/15/03 DATE
03−095 DRAWING No
SHEET 6 OF 16

MAXIMUM DESIGN PRESSURE RATING "W" (p.s.f.) AND CORRESPONDING MAXIMUM ANCHOR SPACING SCHEDULE FOR INSTALLATIONS INTO CONCRETE AND C.B.S. STRUCTURES *

(VALID ONLY FOR PANEL INSTALLATIONS AS PER SECTIONS 1 THRU 7, ON SHEETS 3 & 4 OF 16)

MAXIMUM DESIGN LOAD W (p.s.f.)	MAXIMUM ANCHORS SPACING FOR E. D. = 3 1/2" **								APPLICABLE TO SECTIONS # & ANY COMBINATION OF THEM	MAXIMUM PANEL LENGTH "L" (ft.)
	TAPCONS		CF TAP-GRIP		CALK-IN		PANELMATES			
	TO CONCRETE	TO MASONRY	TO CONCRETE	TO MASONRY	TO CONCRETE	TO MASONRY	TO CONCRETE	TO MASONRY		
+55.5, -72.0	6"	N/A	N/A	N/A	6"	N/A	6"	N/A	1 (TOP)	>7'-5" TO 8'-8"
	6"	6"	N/A	N/A	6"	6"	6"	6"	1 (BOTTOM)	
	6"	N/A	N/A	N/A	6"	N/A	6"	N/A	2 (TOP)	
	6"	N/A	N/A	N/A	6"	N/A	5"	N/A	2 (BOTTOM)	
	6"	N/A	N/A	N/A	6"	N/A	6"	N/A	3 (TOP)	
	6"	6"	N/A	N/A	6"	6"	6"	6"	3 (BOTTOM)	
	6"	N/A	N/A	N/A	6"	N/A	6"	N/A	4 & 7 (TOP)	
	6"	6"	N/A	N/A	6"	6"	6"	6"	4 & 7 (BOTTOM)	
	N/A	N/A	12 1/2"	6 1/4"	12 1/2"	6 1/4"	6 1/4"	6 1/4"	5 (TOP/BOTTOM)	
+50.0, -53.3	N/A	N/A	12 1/2"	6 1/4"	12 1/2"	6 1/4"	6 1/4"	6 1/4"	6 (TOP/BOTTOM)	>8'-8" TO 11'-2"
+55.0, -72.0	N/A	N/A	6 1/4"	N/A	6 1/4"	6 1/4"	6 1/4"	6 1/4"	6 (TOP/BOTTOM)	>8'-8" TO 11'-2"

— SEE SHEET 8 & 9 OF 16 FOR ANCHORS TYPE & SPACING FOR INSTALLATIONS INTO WOOD FRAME BUILDINGS.

** MAXIMUM ANCHOR SPACINGS ARE VALID FOR 3 1/2" EDGE DISTANCE. FOR E. D. LESS THAN 3 1/2", REDUCE ANCHOR SPACING BY MULTIPLYING SPACING SHOWN ON SCHEDULE BY THE FOLLOWING FACTORS. (NOTE : Min. E. D. FOR CALK-IN ANCHORS IS 2 1/2").
FOR THIS OPERATION TO BE POSIBLE, REDUCED SPACING OBTAINED USING FACTOR SHALL NOT BE LESS THAN MINIMUM SPACING INDICATED FOR EACH ANCHOR TYPE AT ANCHORS LEGEND.

ACTUAL E. D.	FACTOR		
	TAPCON/ PANELMATES	CALK-IN	CF TAP-GRIP
3"	.86	.75	1.00
2 1/2"	.71	.50	.80
2"	.50	–	–

ANCHORS LEGEND

ANCHORS TYPE	ANCHOR MIN. SPACING
TAPCON/ PANELMATES	3.0"
CALK-IN	2.5"
CF TAP-GRIP	3.0"

E. D. = EDGE DISTANCE

PRODUCT REVISED
as complying with the Florida
Buiding Code
Acceptance No 03-0521.07
Expiration Date 06/26/2008
By Helena A. Molina
Miami Dade Product Control
Division

5/2/03

F.B.C.(H.V.H.Z.)/MIAMI-DADE COUNTY

TILTECO INC.
TILLIT TESTING & ENGINEERING COMPANY
6595 N.W. 36th. St., Ste. 217, VIRGINIA GARDENS, Fl. 33166
Phone : (305)871-1530 . Fax : (305)871-1531
EB-0006719
WALTER A. TILLIT Jr., P. E.
FLORIDA Lic. # 44167

20 GAGE STORM PANEL

ROBICO SHUTTERS, Inc.
4800 S.W. 51st STREET
DAVIE, FL. 33314

REV. No	DESCRIPTION	DATE	REV. No	DESCRIPTION	DATE
1	OLD 98-297	5/13/03	3	–	–
2	–	–	4	–	–

AS SHOWN SCALE
5/15/03 DATE
03-095 DRAWING No
SHEET 7 OF 16

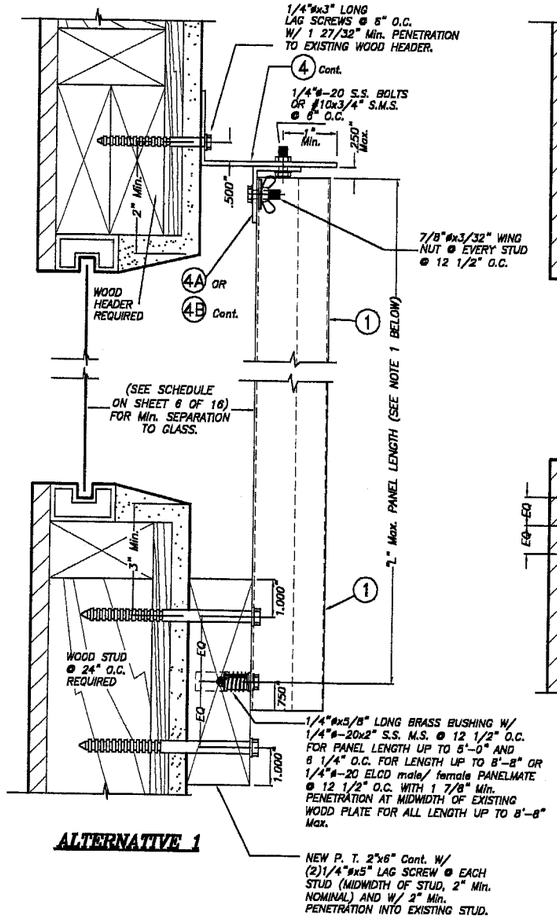

ALTERNATIVE 1

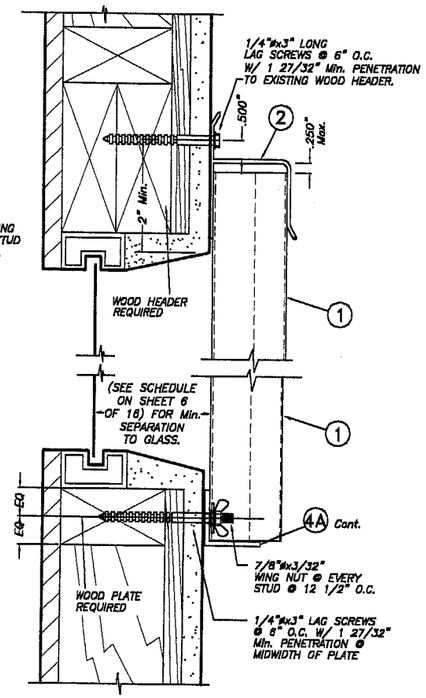

ALTERNATIVE 2

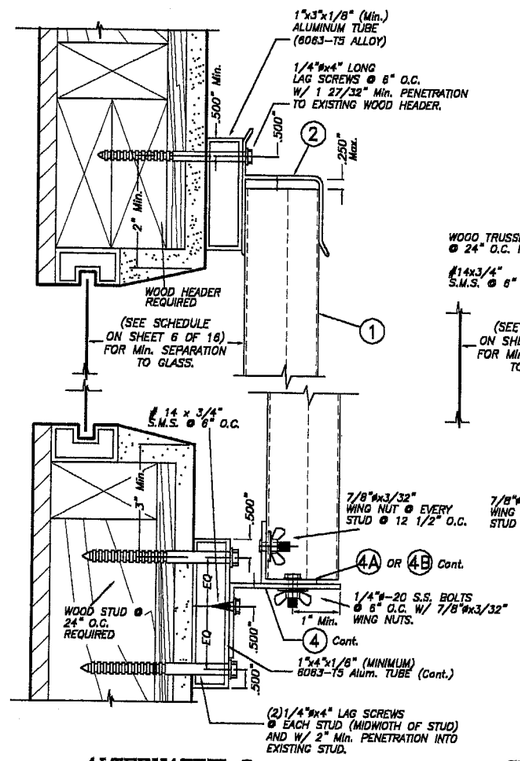

ALTERNATIVE 3

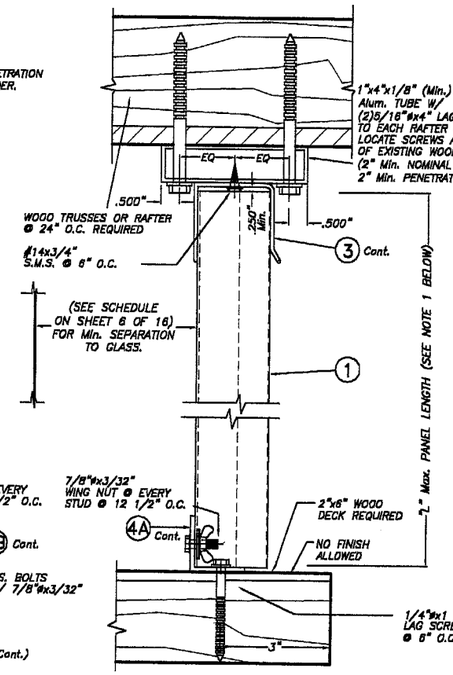

CEILING & FLOOR MOUNTING INSTALLATION – SECTION 2

SCALE: 1/4" = 1"

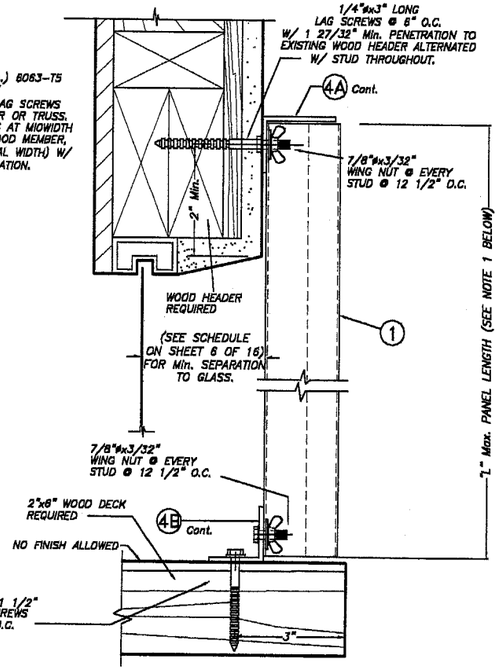

WALL MOUNTING & FLOOR MOUNTING INSTALLATIONS – SECTION 2A

SCALE: 1/4" = 1"

WALL MOUNTING INSTALLATIONS – SECTION 1

SCALE: 1/4" = 1"

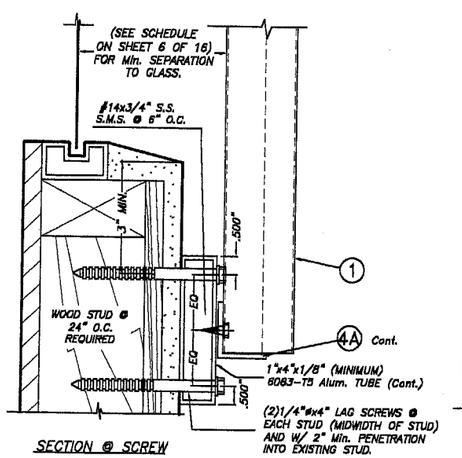

SECTION @ SCREW

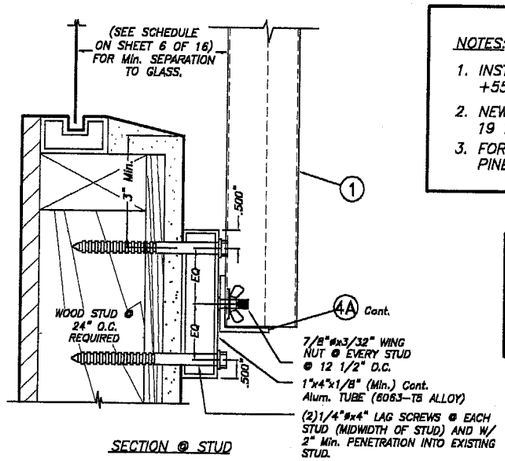

SECTION @ STUD

ALTERNATIVE 4

NOTES:

1. INSTALLATIONS ARE ONLY VALID FOR BUILDINGS WITH DESIGN LOADS UP TO +55.5, – 72.0 psf AND PANEL'S LENGTH UP TO 8'-8".
2. NEW 2" x 6" P. T. TO BE SOUTHERN PINE No. 2, SURFACED DRY WITH 19 % M. M. C. W/ SPECIFIC DENSITY OF 0.55.
3. FOR NEW WOOD FRAME CONSTRUCTION: WOOD MEMBERS TO BE SOUTHERN PINE No. 2, W/ SPECIFIC DENSITY OF 0.55 OR EQUAL.

NOTE FOR COMBINATION OF SECTIONS:

FLOOR/ WALL/ CEILING MOUNTING SECTIONS CAN BE COMBINED IN ANY WAY TO SUIT ANY INSTALLATION.

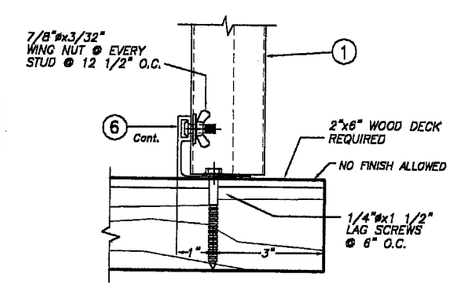

FLOOR MOUNTING INSTALLATION – SECTION 2B

SCALE: 1/4" = 1"

PRODUCT REVISED
as complying with the Florida
Buiding Code
Acceptance No 03-0521.07
Expiration Date 06/26/2008
By Helmy A. Melar
Miami Dade Product Control
Division

F.B.C.(H.V.H.Z.)/MIAMI–DADE COUNTY

5/20/03

TILTECO INC.
TILLIT TESTING & ENGINEERING COMPANY
6595 N.W. 36th. St., Ste. 217, VIRGINIA GARDENS, Fl. 33166
Phone : (305)871-1530 . Fax : (305)871-1531
EB-0006719
WALTER A. TILLIT Jr., P. E.
FLORIDA Lic. # 44167

20 GAGE STORM PANEL

ROBICO SHUTTERS, Inc.
4800 S.W. 51st STREET
DAVIE, FL. 33314

REV. No	DESCRIPTION	DATE	REV. No	DESCRIPTION	DATE
1	OLD 96-297	5/15/03	3	–	–
2	–	–	4	–	–

AS SHOWN SCALE
5/15/03 DATE
03-095 DRAWING No
SHEET 8 OF 16

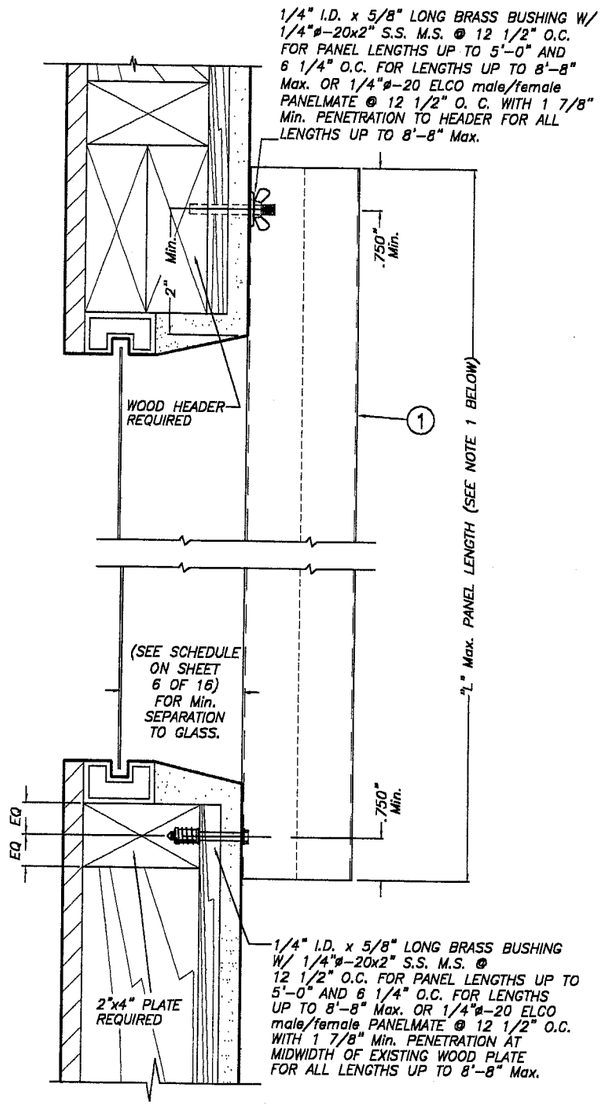

ALTERNATIVE 5

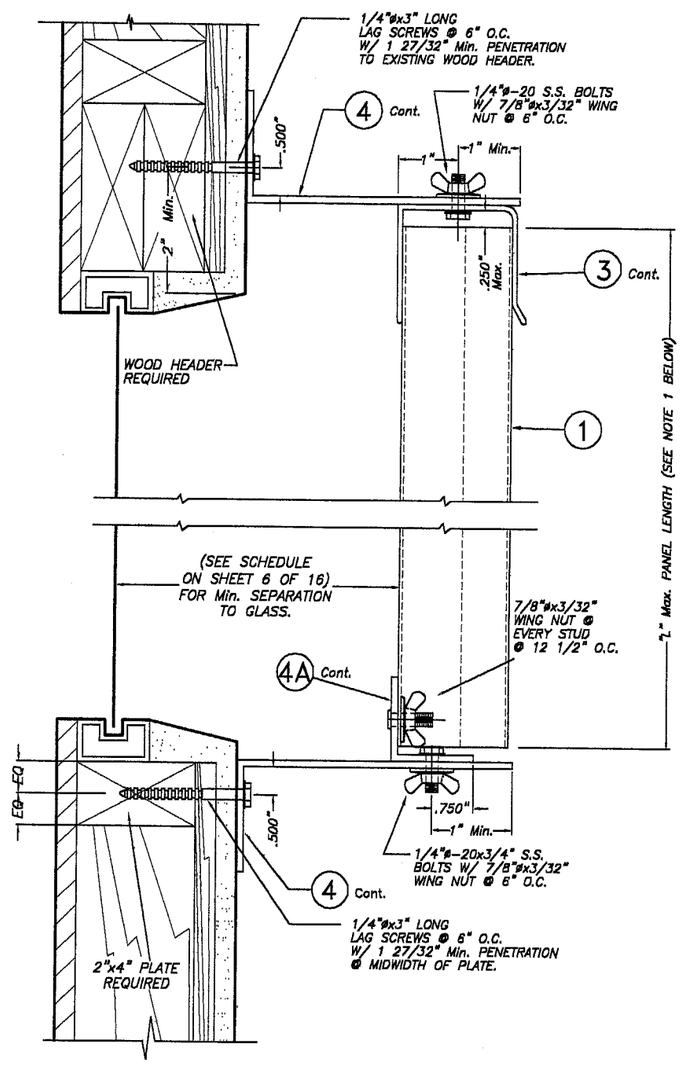

ALTERNATIVE 6

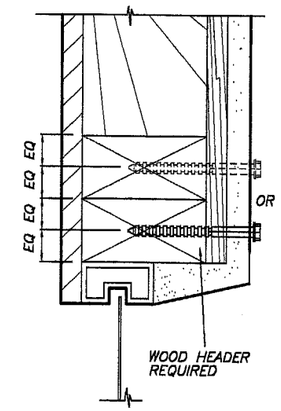

ALTERNATIVE 1

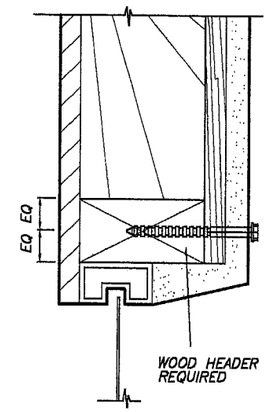

ALTERNATIVE 2

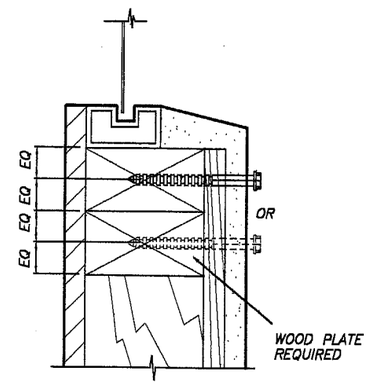

ALTERNATIVE 3

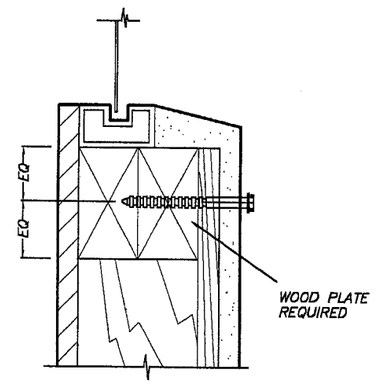

ALTERNATIVE 4

ALTERNATIVE WOOD FRAME CONDITIONS & ANCHOR LOCATIONS

SCALE: 3/8" = 1"

NOTE : SHUTTER TRACKS NOT SHOWN FOR CLARITY

WALL MOUNTING INSTALLATION – SECTION 1

SCALE: 3/8" = 1"

NOTES:

1. INSTALLATIONS ARE ONLY VALID FOR BUILDINGS WITH DESIGN LOADS UP TO +55.5, -72.0 psf AND PANEL'S LENGTH UP TO 8'-8".
2. NEW 2" x 6" P. T. TO BE SOUTHERN PINE No. 2, SURFACED DRY WITH 19 % M. M. C. W/ SPECIFIC DENSITY OF 0.55.
3. FOR NEW WOOD FRAME CONSTRUCTION: WOOD MEMBERS TO BE SOUTHERN PINE No. 2, W/ SPECIFIC DENSITY OF 0.55 OR EQUAL.

NOTE FOR COMBINATION OF SECTIONS:

FLOOR/ WALL/ CEILING MOUNTING SECTIONS CAN BE COMBINED IN ANY WAY TO SUIT ANY INSTALLATION.

5/20/03

PRODUCT REVISED
as complying with the Florida Building Code
Acceptance No 03-0521.07
Expiration Date 06/26/2008
By Helena A. Molina
Miami Dade Product Control Division

F.B.C.(H.V.H.Z.)/MIAMI-DADE COUNTY

INSTALLATION DETAILS ON EXISTING WOOD BUILDINGS

TILTECO INC.
TILLIT TESTING & ENGINEERING COMPANY
6595 N.W. 36th. St. Ste. 217, VIRGINIA GARDENS, Fl. 33166
Phone : (305)871-1530 . Fax : (305)871-1531
EB-0008719
WALTER A. TILLIT Jr., P. E.
FLORIDA Lic. # 44167

20 GAGE STORM PANEL

ROBICO SHUTTERS, Inc.
4800 S.W. 51st STREET
DAVIE, FL. 33314

REV. No	DESCRIPTION	DATE	REV. No	DESCRIPTION	DATE
1	OLD 96-297	5/15/03	3	–	–
2	–	–	4	–	–

AS SHOWN SCALE
5/15/03 DATE
03-095 DRAWING No
SHEET 9 OF 16

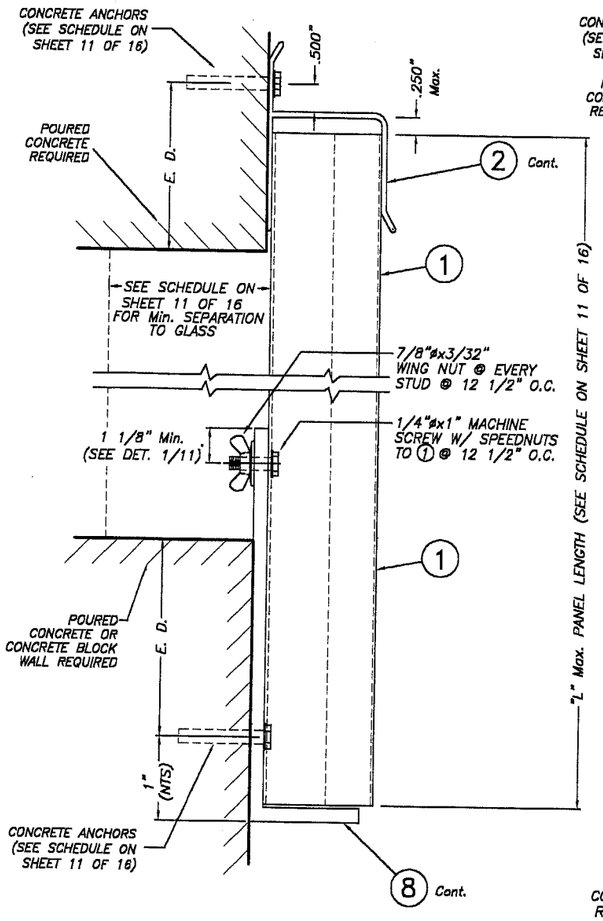

WALL MOUNTING INSTALLATION – SECTION 1

SCALE: 3/8" = 1"

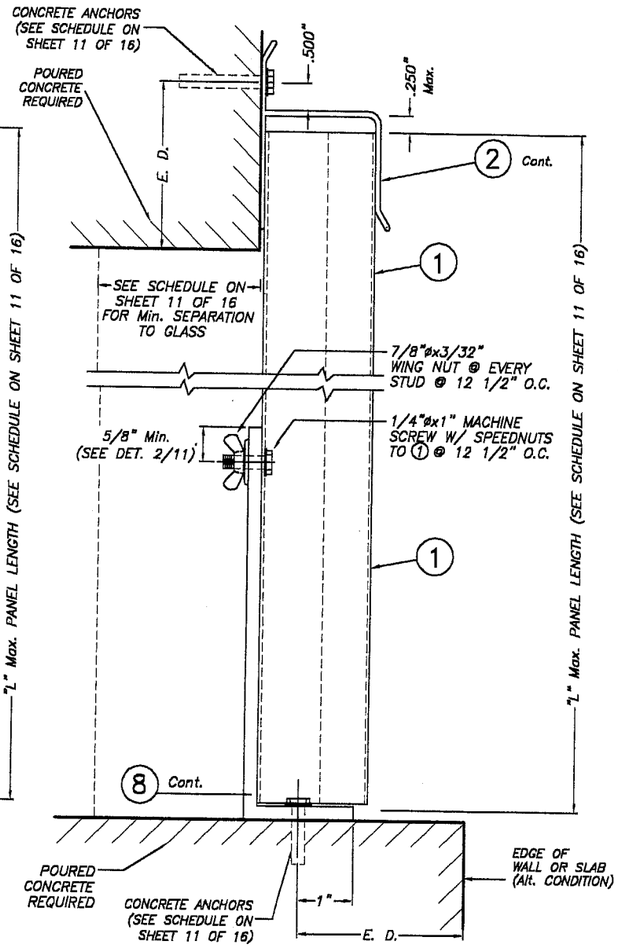

WALL AND FLOOR MOUNTING INSTALLATION – SECTION 2

SCALE: 3/8" = 1"

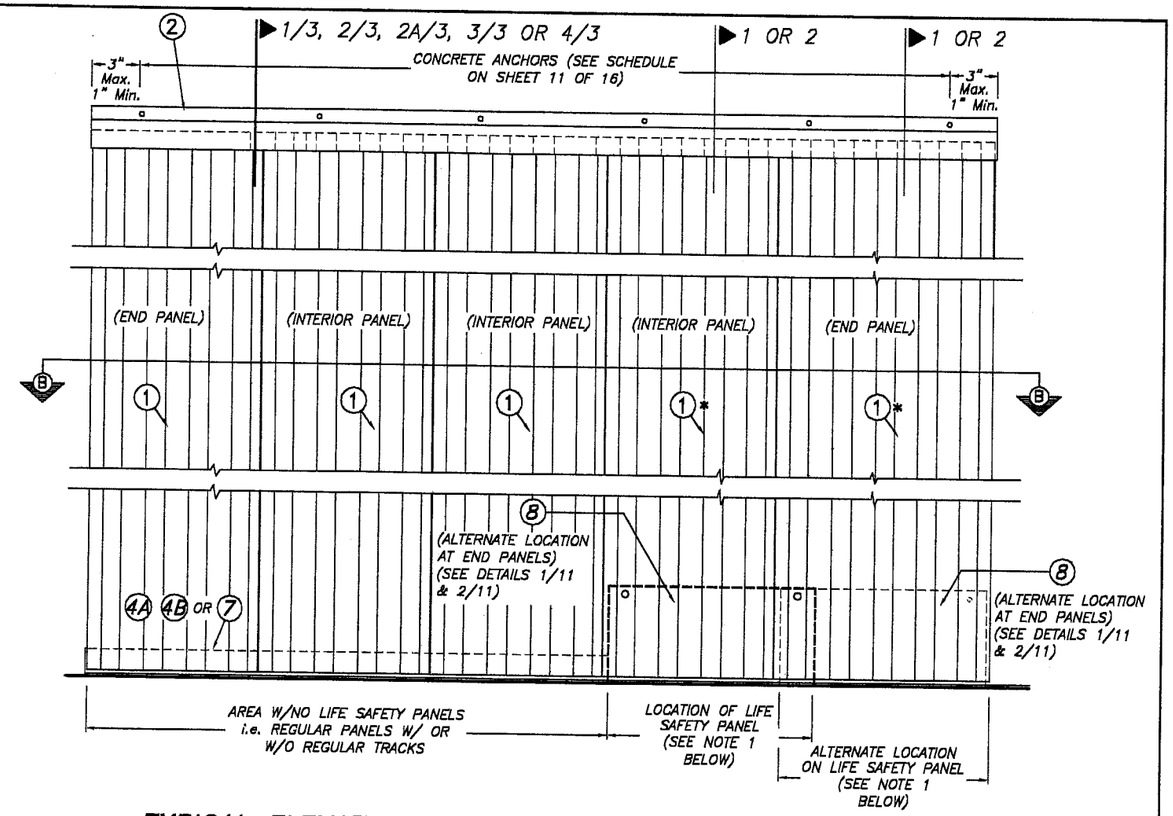

TYPICAL ELEVATION

SCALE 3/32" = 1"

* LAST PANEL 1 TO BE INSTALLED AS LIFE SAFETY STORM PANEL OPENING SHALL ALWAYS BE PROVIDED W/ REAR HANDLE TO FACILITATE INSTALLATION IF INTENDED TO BE INSTALLED OR REMOVED FROM INSIDE OF STRUCTURE.

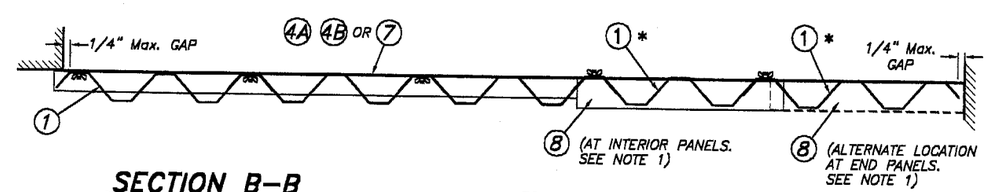

SECTION B–B

PRODUCT REVISED
as complying with the Florida Buiding Code
Accepitance No 03-0521.07
Expiration Date 06/26/2008
By Helmy A. Mahar
Miami Dade Product Control Division

NOTES ON LIFE SAFETY STORM PANEL SYSTEM INSTALLATION :

1. LIFE SAFETY STORM PANEL CAN BE LOCATED AS AN END PANEL (FIRST OR LAST PANEL) OR AS AN INTERIOR PANEL. (ANY PANEL LOCATION IN BETWEEN END PANELS). LIFE SAFETY PANELS MAY OR MAY NOT BE INSTALLED ADJACENT TO REGULAR PANELS (W/ OR W/O REGULAR TRACKS.)
2. LIFE SAFETY STORM PANEL CONSISTS OF 20 GAGE GALVANIZED STORM PANEL AS PER COMPONENT 1, SHEET 1 OF 16 OF DRAWING. THIS PANEL ALLOWS ITSELF TO BE REMOVED OR INSTALLED FROM THE INSIDE OF STRUCTURE.
3. LIFE SAFETY PANEL REQUIRES TOP TRACK TO BE COMPONENT 2 & BOTTOM TRACK TO BE COMPONENT 8 AS PER SHEET 2 OF 16 OF THIS DRAWING. COMPONENT 8 MAY BE INSTALLED WALL OR FLOOR MOUNTED FOLLOWING SECTIONS 1 & 2 ON THIS SHEET, AS WELL AS DETAILS 1 & 2 ON SHEET 11 OF 16.
4. Min. LENGTH FOR COMPONENT 8 IS 15". Max. ANCHOR SPACING FOR COMPONENT 8 ANCHORAGE AT BOTTOM IS GIVEN ON SCHEDULES 1 & 2, SHEET 11 OF 16. COMPONENT 8 MAY BE PERMANENT OR REMOVABLE.
5. SEE DETAILS FOR INSTALLATION INTO WOOD FRAME BUILDINGS ON SHEET 11A OF 16.
6. SEE SHEET 3 OF 16 FOR DETAIL APPLICABLE TO THE NECESSITY FOR THE INSTALLATION OF SPACERS AT TRACKS INSTALLED ADJACENT AND BEYOND TO STUCCO/WOOD BANDS.

5/20/03

TILLECO INC.
TILLIT TESTING & ENGINEERING COMPANY
6595 N.W. 36th. St., Ste. 217, VIRGINIA GARDENS, FL. 33166
Phone : (305)871-1530 . Fax : (305)871-1531
EB-0006719
WALTER A. TILLIT Jr., P. E.
FLORIDA Lic. # 44167

F.B.C.(H.V.H.Z.)/MIAMI-DADE COUNTY

LIFE SAFETY STORM PANEL SYSTEM T.M.
(20 GAGE GALVANIZED STEEL)

ROBICO SHUTTERS, Inc.
4800 S.W. 51st STREET
DAVIE, FL 33314

REV. No	DESCRIPTION	DATE	REV. No	DESCRIPTION	DATE
1	OLD 98-297	5/15/03	3	–	–
2	–	–	4	–	–

AS SHOWN SCALE
5/15/03 DATE
03-095 DRAWING No
SHEET 10 OF 16

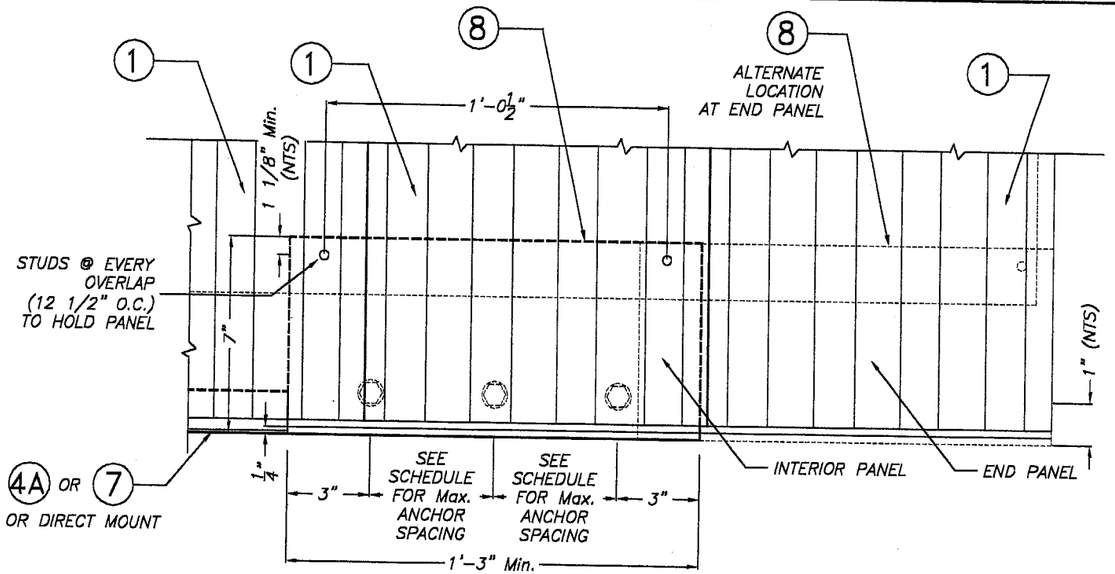

DETAIL 1 : WALL MOUNTING INSTALLATION (APPLICABLE TO SCHEDULE 1)

SCALE: 3/16" = 1"

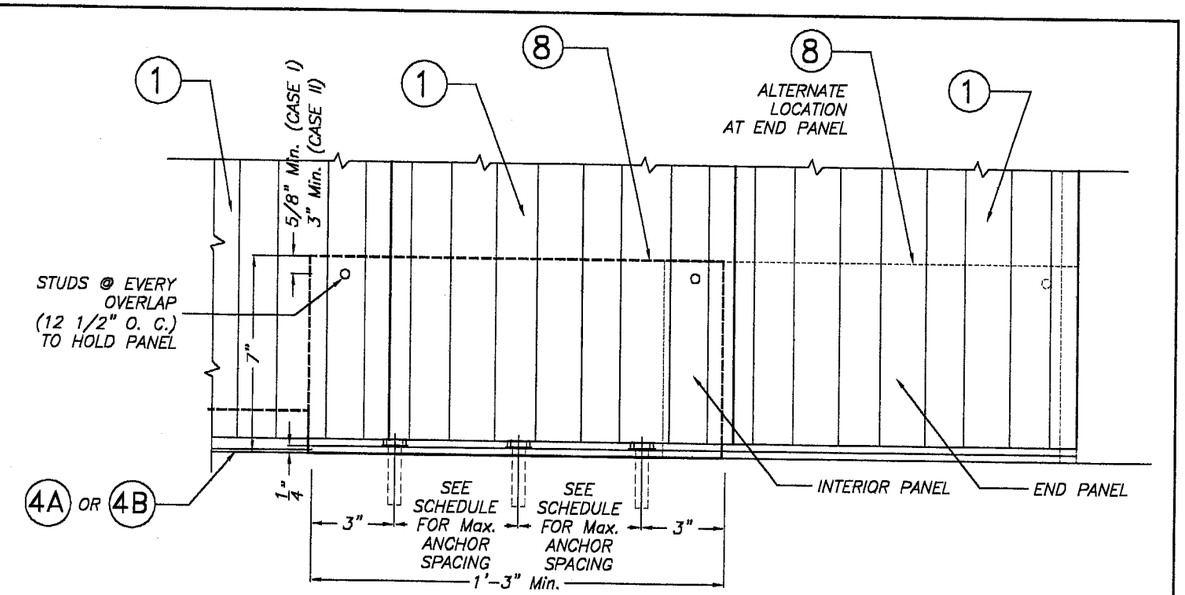

DETAIL 2 : FLOOR MOUNTING INSTALLATION (APPLICABLE TO SCHEDULE 2)

SCALE: 3/16" = 1"

MAXIMUM DESIGN PRESSURE RATING "W" (p.s.f.) AND CORRESPONDING MAXIMUM ANCHOR SPACING SCHEDULE AT (8) FOR INSTALLATIONS INTO CONCRETE AND C.B.S. STRUCTURES

E. D. = EDGE DISTANCE

SCHEDULE # 1 : (8) W/ WALL MOUNT CONDITIONS TOP & BOTTOM W/ E. D. = 3 1/2" *

MAXIMUM DESIGN LOAD W (p.s.f.)	TAPCONS		CF TAP-GRIP		CALK-IN		PANELMATES		APPLICABLE TO SECTIONS # & ANY COMBINATION OF THEM	MAXIMUM PANEL LENGTH "L" (ft.)
	TO CONCRETE	TO MASONRY	TO CONCRETE	TO MASONRY	TO CONCRETE	TO MASONRY	TO CONCRETE	TO MASONRY		
+55.0, -72.0	6"	N/A	N/A	N/A	6"	N/A	6"	N/A	1 & 2 (TOP)	5'-0" OR LESS
	9"	9"	9"	9"	9"	9"	9"	9"	1 (BOTTOM)	
+55.0 -72.0	6"	N/A	N/A	N/A	6"	N/A	6"	N/A	1 & 2 (TOP)	>5'-0" TO 7'-6"
	9"	6"	9"	6"	9"	9"	9"	9"	1 (BOTTOM)	
+55.0 -72.0	6"	N/A	N/A	N/A	6"	N/A	6"	N/A	1 & 2 (TOP)	>7'-6" TO 8'-8"
	9"	6"	9"	6"	9"	6"	6"	6"	1 (BOTTOM)	

SCHEDULE # 2 : (8) W/ FLOOR MOUNT CONDITIONS AT BOTTOM W/ E. D. = 3 1/2" *

MAXIMUM DESIGN LOAD W (p.s.f.)	CASE I (STUD @ 5/8" Min. FROM TOP OF ANGLE)		CASE II (STUD @ 3" Min. FROM TOP OF ANGLE)		APPLICABLE TO SECTIONS # & ANY COMBINATION OF THEM	MAXIMUM PANEL LENGTH "L" (ft.)
	TAPCONS	CALK-IN	TAPCONS	CALK-IN		
	TO CONCRETE	TO CONCRETE	TO CONCRETE	TO CONCRETE		
+49.2 -61.5	4"	4"	6"	6"	2 (BOTTOM)	7'-6" OR LESS
+52.8 -66.0	4"	4"	5 1/2"	5 1/2"	2 (BOTTOM)	7'-6" OR LESS
+55.0 -72.0	3 1/2"	3 1/2"	5"	5"	2 (BOTTOM)	7'-6" OR LESS
+55.0 -72.0	3"	3"	4 1/2"	4 1/2"	2 (BOTTOM)	>7'-6" TO 8'-8"

5/20/03

MAXIMUM DESIGN PRESSURE RATING "W" (p.s.f.) AND CORRESPONDING MAXIMUM PANEL LENGTH "L" SCHEDULE

(APPLICABLE ONLY TO SECTIONS 1 & 2 INDICATED FOR LIFE SAFETY STORM PANEL SYSTEM ON SHEET 9 OF 16).

MAXIMUM DESIGN PRESSURE RATING W (p.s.f.)	Max. PANEL LENGTH L (ft.) (SEE SECTIONS)	MINIMUM SEPARATION TO GLASS	PANEL CONDITION
+55.0, -72.0	8'-8"	2 3/4"	UNBOLTED

** MAXIMUM ANCHOR SPACINGS ARE VALID FOR 3 1/2" EDGE DISTANCE. FOR E. D. LESS THAN 3 1/2", REDUCE ANCHOR SPACING BY MULTIPLYING SPACING SHOWN ON SCHEDULE BY THE FOLLOWING FACTORS. (NOTE : Min. E. D. FOR CALK-IN ANCHORS IS 2 1/2").
FOR THIS OPERATION TO BE POSIBLE, REDUCED SPACING OBTAINED USING FACTOR SHALL NOT BE LESS THAN MINIMUM SPACING INDICATED FOR EACH ANCHOR TYPE AT ANCHORS LEGEND.

ACTUAL E. D.	FACTOR		
	TAPCON/ PANELMATES	CALK-IN	CF TAP-GRIP
3"	.86	.75	1.00
2 1/2"	.71	.50	.80
2"	.50	–	–

ANCHORS LEGEND

ANCHORS TYPE	ANCHOR MIN. SPACING
TAPCON/ PANELMATES	3.0"
CALK-IN	2.5"
CF TAP-GRIP	3.0"

PRODUCT REVISED
as complying with the Florida Building Code
Acceptance No 03-0521.07
Expiration Date 06/26/2008
By Helena A. Molina
Miami Dade Product Control Division

F.B.C.(H.V.H.Z.)/MIAMI-DADE COUNTY

TILLECO INC.
TILLIT TESTING & ENGINEERING COMPANY
6595 N.W. 36th. St., Ste. 217, VIRGINIA GARDENS, FL 33166
Phone : (305)871-1530 . Fax : (305)871-1531
EB-0006719
WALTER A. TILLIT Jr., P. E.
FLORIDA Lic. # 44167

LIFE SAFETY STORM PANEL SYSTEM™
(20 GAGE GALVANIZED STEEL)

ROBICO SHUTTERS, Inc.
4800 S.W. 51st STREET
DAVIE, FL. 33314

REV. No	DESCRIPTION	DATE	REV. No	DESCRIPTION	DATE
1	OLD 96-297	5/15/03	3	–	–
2	–	–	4	–	–

AS SHOWN
SCALE
5/15/03
DATE
03-095
DRAWING No
SHEET 11 OF 16

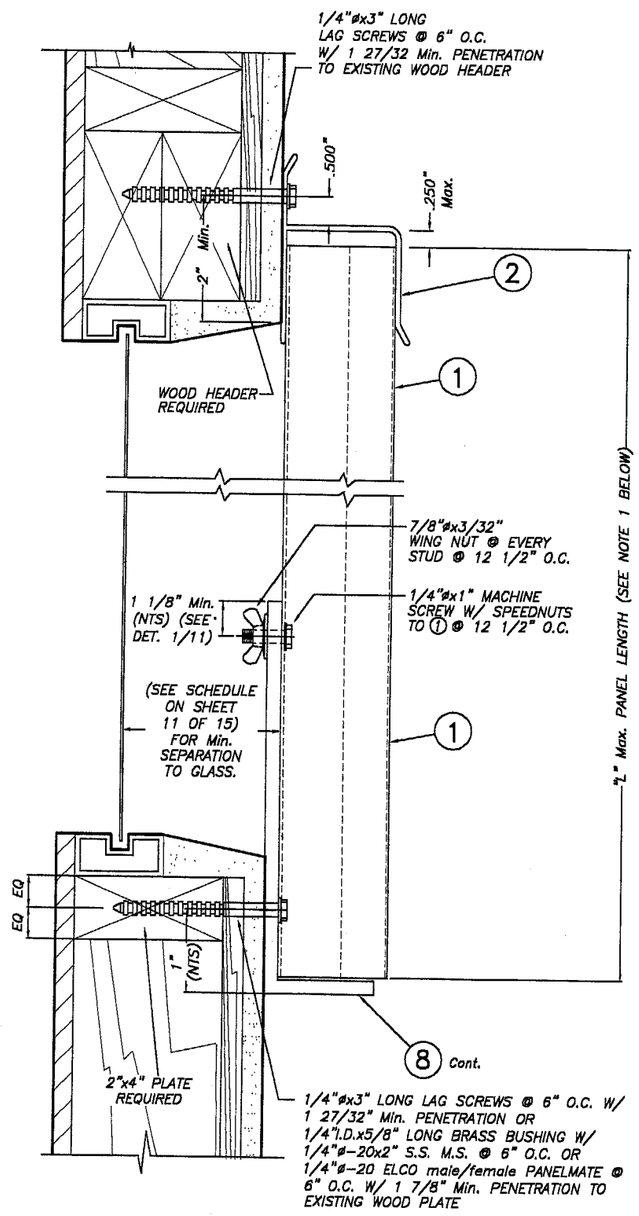

WALL MOUNTING INSTALLATION – SECTION 1

SCALE: 3/8" = 1"

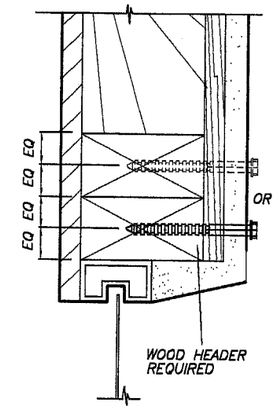

ALTERNATIVE 1

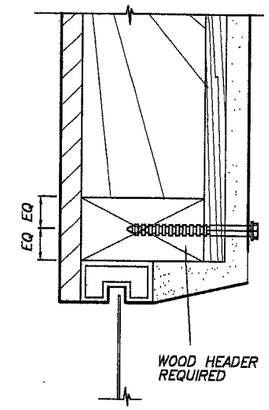

ALTERNATIVE 2

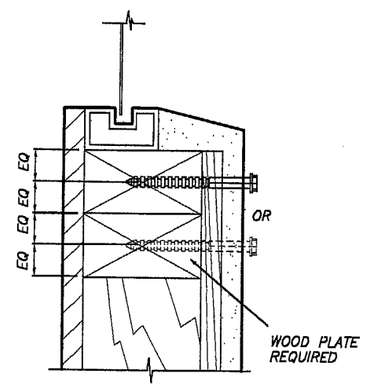

ALTERNATIVE 3

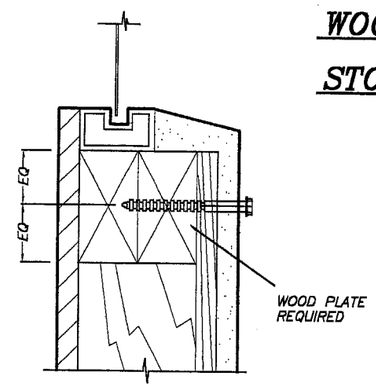

ALTERNATIVE 4

INSTALLATION DETAILS ON EXISTING WOOD BUILDINGS FOR LIFE SAFETY STORM PANEL SYSTEM

ALTERNATIVE WOOD FRAME CONDITIONS & ANCHOR LOCATIONS

SCALE: 3/8" = 1"

NOTE : SHUTTER TRACKS NOT SHOWN FOR CLARITY

NOTES:

1. INSTALLATIONS ARE ONLY VALID FOR BUILDINGS WITH DESIGN LOADS UP TO +55.5, −72.0 psf AND PANEL'S LENGTH UP TO 8'−8".
2. NEW 2" x 6" P. T. TO BE SOUTHERN PINE No. 2, SURFACED DRY WITH 19 % M. M. C. W/ SPECIFIC DENSITY OF 0.55.
3. FOR NEW WOOD FRAME CONSTRUCTION: WOOD MEMBERS TO BE SOUTHERN PINE No. 2, W/ SPECIFIC DENSITY OF 0.55 OR EQUAL.

5/20/03

PRODUCT REVISED
as complying with the Florida
Buiding Code
Acceptance No 03-0521.07
Expiration Date 06/26/2008
By
Miami Dade Product Control
Division

F.B.C.(H.V.H.Z.)/MIAMI-DADE COUNTY

TILLECO INC.
TILLIT TESTING & ENGINEERING COMPANY
6593 N.W. 36th. St., Ste. 217, VIRGINIA GARDENS, Fl. 33166
Phone : (305)871-1530 . Fax : (305)871-1531
EB-0008719
WALTER A. TILLIT Jr., P. E.
FLORIDA Lic. # 44167

LIFE SAFETY STORM PANEL SYSTEM™
(20 GAGE GALVANIZED STEEL)

ROBICO SHUTTERS, Inc.
4800 S.W. 51st STREET
DAVIE, FL. 33314

REV. No	DESCRIPTION	DATE	REV. No	DESCRIPTION	DATE
1	OLD 96-297	5/15/03	3	–	–
2	–	–	4	–	–

AS SHOWN
SCALE

5/15/03
DATE

03-095
DRAWING No

SHEET 11A OF 16

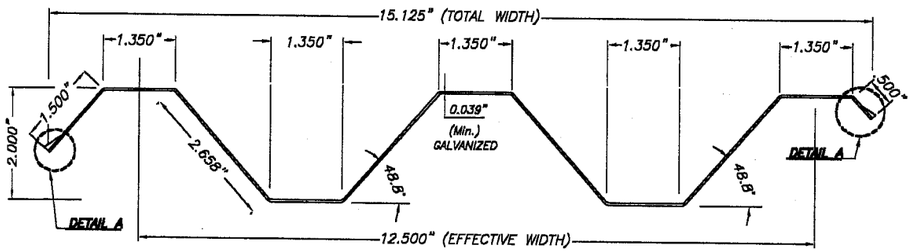

① PANEL

SCALE: 3/8" = 1"

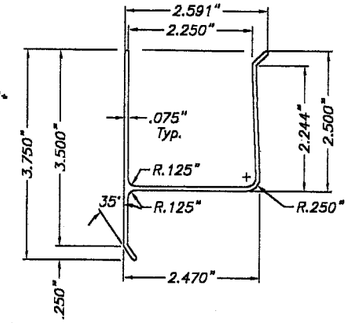

② REVERSED "h" TRACK

SCALE: 3/8" = 1"

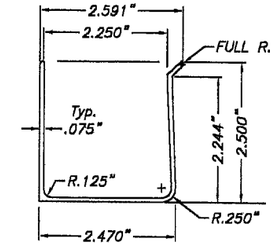

③ REVERSED "U" TRACK

SCALE: 3/8" = 1"

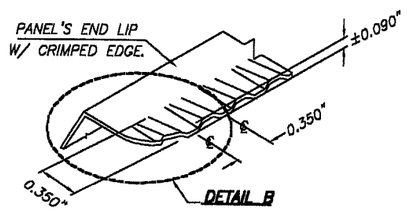

ISOMETRIC VIEW

DETAIL A

(N.T.S.)

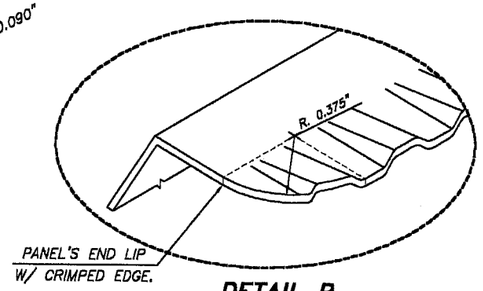

DETAIL B

ROUNDED CORNER @ ENDS OF PANEL'S END LIP W/ CRIMPED EDGE.
(N.T.S.)

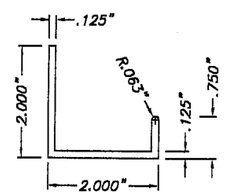

④ "J" TRACK

SCALE: 3/8" = 1"

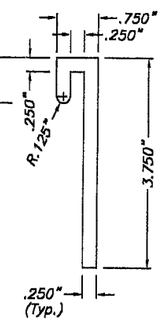

⑤ PANEL HANGER : 1 1/4" WIDE

6061-T6 Alum. ALLOY
SCALE: 3/8" = 1"

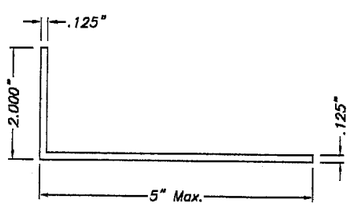

⑥ 2"x5"(Max.) Alum. ANGLE

SCALE: 3/8" = 1"

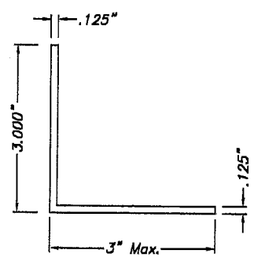

⑦ 3"x3"(Max.) Alum. ANGLE

SCALE: 3/8" = 1"

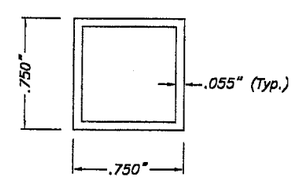

⑧ STOP BAR 11" LONG

6063-T5 Alum. ALLOY
SCALE: FULL

COMPONENTS

5/20/03

GENERAL NOTES: VALID FOR E-Z HANG STORM PANEL SYSTEM

1. E-Z HANG STORM PANEL SHOWN ON THIS PRODUCT APPROVAL DOCUMENT HAS BEEN VERIFIED FOR CODE COMPLIANCE IN ACCORDANCE WITH THE 2001 EDITION OF THE FLORIDA BUILDING CODE.
DESIGN WIND LOADS SHALL BE DETERMINED AS PER SECTION 1619 OF THE ABOVE MENTIONED CODE, FOR A BASIC WIND SPEED OF 146 m.p.h., AND IN ACCORDANCE W/ ASCE 7-98 STANDARD.
STORM PANEL'S ADEQUACY FOR IMPACT AND FATIGUE RESISTANCE HAS BEEN VERIFIED IN ACCORDANCE WITH SECTIONS 1606.1.4 OF THE ABOVE MENTIONED CODE AS PER PA-201, PA-202 AND PA-203 AS PER FENESTRATION TESTING LABORATORY, INC. REPORT # 2032.

2. THIS SYSTEM HAS BEEN DESIGNED TO BE INSTALLED ON THE OUTSIDE OF THE OPENING ACCESSING THE OPENING FROM THE INSIDE W/O THE USE OF A LADDER OR LIFT. THIS APPLICATION IS VALID WHEN INSTALLATION IS INTENDED TO BE PERFORMED FROM THE INSIDE OF STRUCTURE.

3. SERIES 1000 INSTALLATION IS APPLICABLE TO SINGLE AND DOUBLE HUNG STYLE WINDOWS WHEN INSTALLATION IS REQUIRED TO BE PERFORMED FROM THE INSIDE OF STRUCTURE.

4. SERIES 2000 INSTALLATION IS APPLICABLE TO SINGLE AND DOUBLE HUNG AND HORIZONTAL SLIDERS STYLE WINDOWS WHEN INSTALLATION IS REQUIRED TO BE PERFORMED FROM THE INSIDE OF STRUCTURE.

5. ALL ALUMINUM EXTRUSIONS TO BE 6063-T6 ALLOY. (UNLESS OTHERWISE NOTED)

6. ALL ALUMINUM SHEET METAL USED AT CLOSURES SHALL HAVE 3105-H14 ALLOY.

7. ALL STEEL SHEET METAL PANELS SHALL HAVE STRUCTURAL QUALITY STEEL, ASTM A-653 GRADE 40 Min., GALVANIZED STEEL DESIGNATION W/FY= 41.4 ksi (AFTER ROLLED).

8. ALL SCREWS TO BE STAINLESS STEEL 304 OR 316 SERIES OR CORROSION RESISTANT COATED CARBON STEEL AS PER DIN 50018 W/ 50 ksi YIELD POINT AND 90 ksi TENSILE STRENGTH.

9. BOLTS TO BE 2024-T4 ALUMINUM ALLOY, GALVANIZED OR STAINLESS STEEL WITH 36 Ksi Min. YIELD POINT.

10. ANCHORS TO WALL SHALL BE AS FOLLOWS:
(A) TO EXISTING POURED CONCRETE:
- 1/4"ø TAPCON ANCHORS AS MANUFACTURED BY I.T.W. BUILDEX OR ELCO TEXTRON.
- 1/4"øx7/8" CALK-IN ANCHORS OR ELCO male/female PANELMATES AS MANUFACTURED BY POWERS FASTENING INC. AND ELCO TEXTRON, RESPECTIVELY.

NOTES:
A.1) MINIMUM EMBEDMENT OF TAPCON ANCHORS INTO POURED CONCRETE SHALL BE 1 3/4" AND 1 7/8" FOR ELCO PANELMATES.

A2) 7/8" CALK-IN ANCHORS SHALL BE ENTIRELY EMBEDDED INTO THE POURED CONCRETE. NO EMBEDMENT INTO STUCCO SHALL BE PERMITTED. 1/4" #-20 SCREWS USED SHALL BE 1 1/2" LONG MINIMUM SHOULD STUCCO EXIST, AND 1" Min. FOR WALLS WITH NO STUCCO, AND MAY BE HEADED SCREWS OR ALL THREADED SCREWS W/O HEAD, BUT WITH WING NUTS.

A.3) IN CASE THAT PRECAST STONE, PRECAST CONCRETE PANELS, OR PAVERS BE FOUND ON THE EXISTING WALL OR FLOOR, ANCHORS SHALL BE LONG ENOUGH TO REACH THE MAIN STRUCTURE BEHIND SUCH PANELS. ANCHORAGE SHALL BE AS MENTIONED IN A.1) AND IN A.2).

(B) TO EXISTING CONCRETE BLOCK WALL:
- 1/4"ø TAPCON ANCHORS, AS MANUFACTURED BY I.T.W. BUILDEX OR ELCO TEXTRON.
- 1/4"øx7/8" CALK-IN ANCHORS OR ELCO male/female PANELMATES AS MANUFACTURED BY POWERS FASTENING INC. AND ELCO TEXTRON, RESPECTIVELY.

NOTES:
B.1) MINIMUM EMBEDMENT OF TAPCON ANCHORS AND ELCO PANELMATES INTO CONCRETE BLOCK SHALL BE 1 1/4".

B.2) 7/8" CALK-IN ANCHORS AND SHALL BE ENTIRELY EMBEDDED INTO THE CONCRETE BLOCK UNIT. NO EMBEDMENT INTO STUCCO SHALL BE PERMITTED. 1/4" #-20 SCREWS USED SHALL BE 1 1/2" LONG Min. SHOULD STUCCO EXIST, AND 1" Min. FOR WALLS WITH NO STUCCO, AND MAY BE HEADED SCREWS OR ALL THREADED SCREWS W/O HEAD, BUT WITH WING NUTS.

B.3) IN CASE THAT PRECAST STONE, OR PRECAST CONCRETE PANELS BE FOUND ON THE EXISTING WALL, ANCHORS SHALL BE LONG ENOUGH TO REACH THE MAIN STRUCTURE BEHIND SUCH PANELS. ANCHORAGE SHALL BE AS MENTIONED IN B.1) AND IN B.2).

(C) ANCHORS SHALL BE INSTALLED FOLLOWING ALL OF THE RECOMMENDATIONS AND SPECIFICATIONS OF THE ANCHOR'S MANUFACTURER.

11. IT SHALL BE THE RESPONSIBILITY OF THE CONTRACTOR TO VERIFY THE SOUNDNESS OF THE STRUCTURE WHERE SHUTTER IS TO BE ATTACHED TO INSURE PROPER ANCHORAGE.

12. ROBICO SHUTTER, Inc. E - Z HANG STORM PANEL SYSTEM™ IS PATENT PENDING.

11. (a) THIS PRODUCT APPROVAL DOUCMENT (P.A.D.) PREPARED BY THIS ENGINEER IS GENERIC AND DOES NOT PROVIDE INFORMATION FOR A SITE SPECIFIC PROJECT; i.e. WHERE THE SITE CONDITIONS DEVIATE FROM THE P.A.D.

(b) CONTRACTOR TO BE RESPONSIBLE FOR THE SELECTION, PURCHASE AND INSTALLATION OF THIS PRODUCT BASED ON THIS PRODUCT APPROVAL PROVIDED HE/SHE DOES NOT DEVIATE FROM THE CONDITIONS DETAILED ON THIS DOCUMENT. CONSTRUCTION SAFETY AT SITE IS THE CONTRACTOR'S RESPONSIBILITY.

(c) THIS PRODUCT APPROVAL DOCUMENT WILL BE CONSIDERED INVALID IF MODIFIED.

(d) SITE SPECIFIC PROJECTS SHALL BE PREPARED BY A FLORIDA REGISTERED ENGINEER OR ARCHITECH WHICH WILL BECOME THE PROFESSIONAL OF RECORD (P.O.R.) FOR THE PROJECT AND WHO WILL BE RESPONSIBLE FOR THE PROPER USE OF THE P.A.D.
PROFESSIONAL OF RECORD, ACTING AS A DELEGATED ENGINEER TO THE P.A.D. ENGINEER, SHALL SUBMIT TO THIS THE SITE SPECIFIC DRAWINGS FOR REVIEW.

(e) THIS P.A.D. SHALL BEAR THE DATE AND ORIGINAL SEAL AND SIGNATURE OF THE PROFESSIONAL ENGINEER THAT PREPARED IT.

13. SHUTTER MANUFACTURER'S STAMP SHALL BE PLACED ON THE EXPOSED SURFACE OF THE CENTER FLANGE OF EVERY PANEL APPROXIMATELY 4" ABOVE THE BOTTOM OF SUCH PANEL.
STAMP SHALL READ AS FOLLOWS:
ROBICO SHUTTERS, Inc.
DAVIE, FLORIDA
MIAMI-DADE COUNTY PRODUCT CONTROL APPROVED.

PRODUCT REVISED
as complying with the Florida Buiding Code
Acceptance No 03-0521.07
Expiration Date 06/26/2008
By Helmy A. Melek
Miami Dade Product Control Division

F.B.C.(H.V.H.Z.)/MIAMI-DADE COUNTY

TILTECO INC.
TILLIT TESTING & ENGINEERING COMPANY
6595 N.W. 36th. St., Ste. 217, VIRGINIA GARDENS, Fl. 33166
Phone : (305)871-1330 Fax : (305)871-1531
EB-0006719
WALTER A. TILLIT Jr., P. E.
FLORIDA Lic. # 44167

E - Z HANG STORM PANEL SYSTEM™
(20 GAGE GALVANIZED STEEL)

ROBICO SHUTTERS, Inc.
4800 S.W. 51st STREET
DAVIE, FL. 33314

REV. No	DESCRIPTION	DATE	REV. No	DESCRIPTION	DATE
1	OLD 96-297	5/15/03	3	–	–
2	–	–	4	–	–

AS SHOWN
SCALE

5/15/03
DATE

03-095
DRAWING No

SHEET 12 OF 16

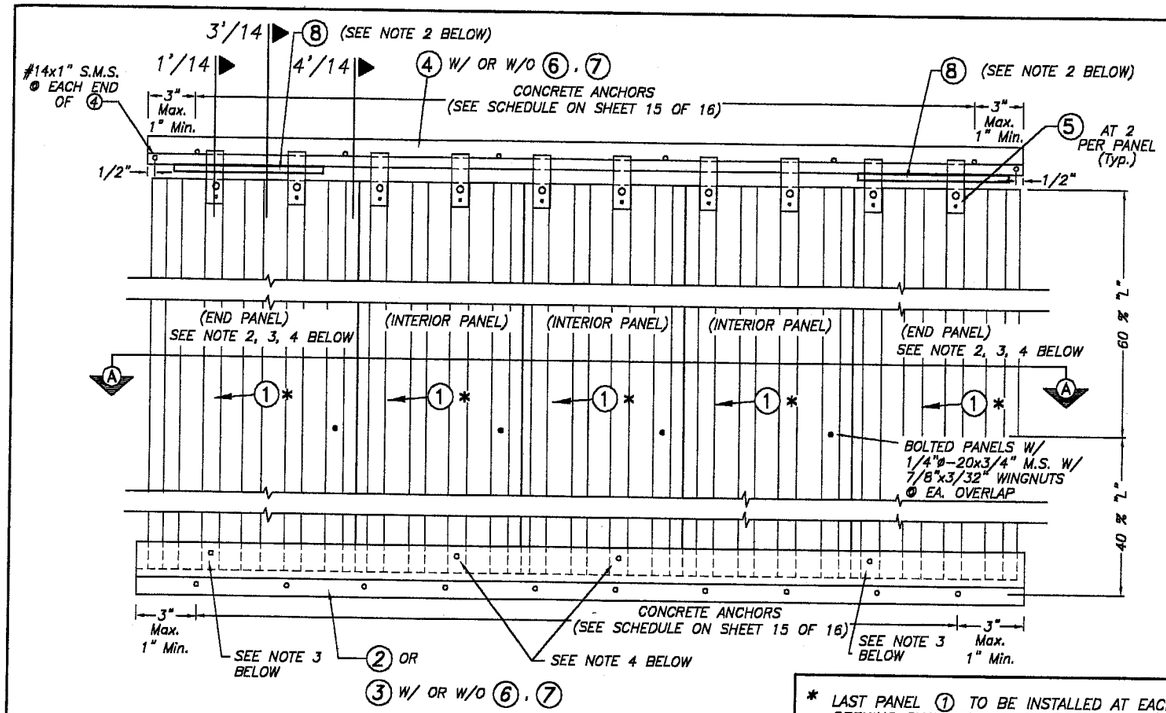

STORM PANEL SERIES 2000 INSTALLATION

SCALE 3/32" = 1"

* LAST PANEL (1) TO BE INSTALLED AT EACH OPENING SHALL ALWAYS BE PROVIDED W/ REAR HANDLE TO FACILITATE INSTALLATION IF INTENDED TO BE INSTALLED FROM INSIDE OF STRUCTURE.

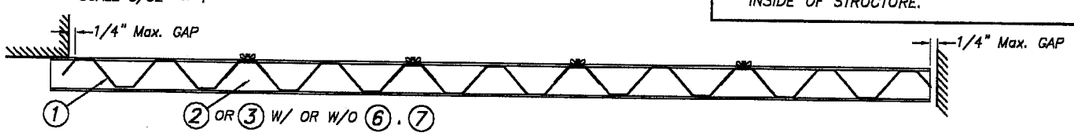

SECTION A–A

SCALE 3/32" = 1"

NOTES :

(1). DEFINITION OF SERIES 2000: E – Z HANG STORM PANEL SYSTEM CONSISTING OF PANEL + Cont. TRACKS TOP & BOTTOM.

(2). END PANELS SHALL ALWAYS BE CONNECTED TO BOTTOM TRACK OTHERWISE A STOP BAR (8) SHALL BE PROVIDED AT TOP OF SUCH PANELS.

(3). IF END PANELS ARE CONNECTED TO BOTTOM TRACK, CONNECTION SHALL CONSIST OF 1/4"ø-20x3/4" M.S. W/ 7/8"øx3/32" WING NUT OR 1/4"øx3/4" Min. THUMBSCREW INTO TAPPED BOTTOM TRACK. LOCATION OF FASTENERS MAY BE AT EITHER OF TWO EXTERIOR FLAT FLANGES OF END PANEL.

(4). IN CASE THAT END PANELS ARE NOT CONNECTED TO BOTTOM TRACK (i.e. A STOP BAR IS ONLY USED AT TOP) AT LEAST TWO PANELS SHALL BE CONNECTED TO BOTTOM TRACK USING SPECS INDICATED ON NOTE (3) ABOVE. IN SUCH CASE, CONNECTION OF PANELS TO BOTTOM TRACK MAY OCCUR AT ANY PANEL LOCATION.

(5). SEE SECTION 1', 3' & 4' ON SHEET 14 OF 16. SEE ANCHOR SCHEDULE ON SHEET 15 OF 16.

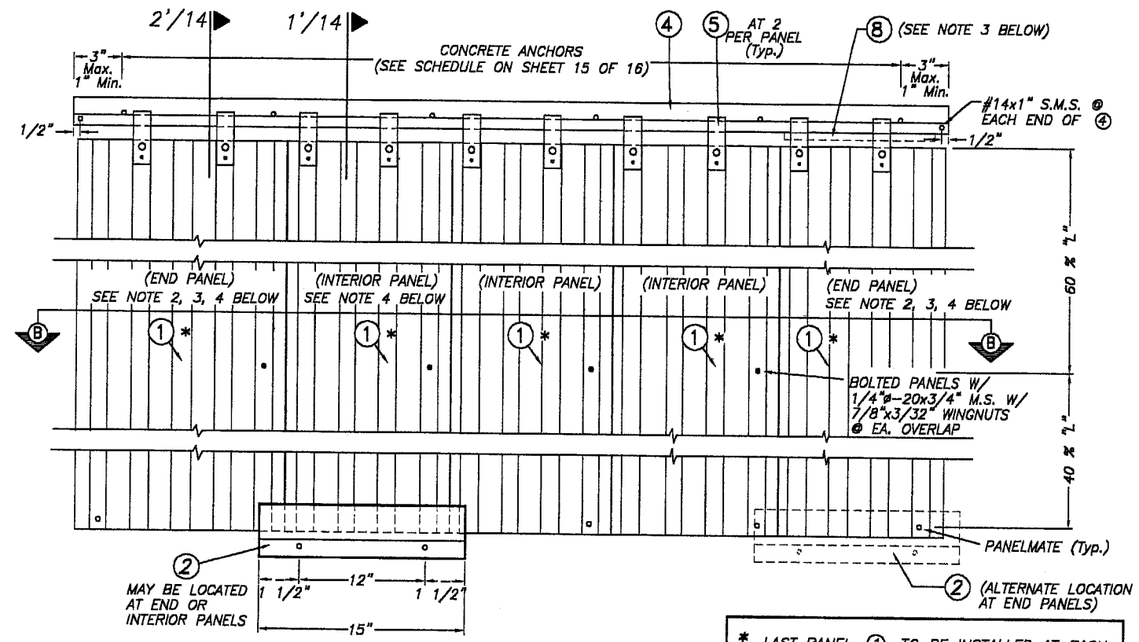

STORM PANEL SERIES 1000 INSTALLATION

SCALE 3/32" = 1"

* LAST PANEL (1) TO BE INSTALLED AT EACH OPENING SHALL ALWAYS BE PROVIDED W/ REAR HANDLE TO FACILITATE INSTALLATION IF INTENDED TO BE INSTALLED FROM INSIDE OF STRUCTURE.

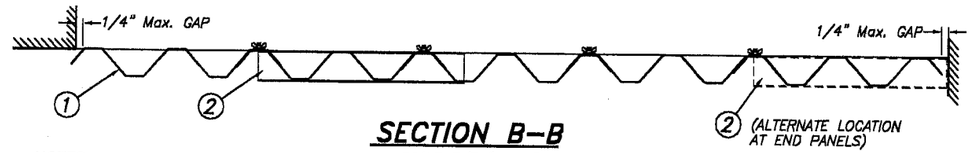

SECTION B–B

SCALE 3/32" = 1"

NOTES :

(1). DEFINITION OF SERIES 1000: E – Z HANG STORM PANEL SYSTEM CONSISTING OF PANEL + Cont. TRACKS AT TOP & male PANELMATES OR 15" LONG (2) AT BOTTOM W/ PANELMATES.

(2). END PANELS SHALL ALWAYS BE CONNECTED TO EXISTING SILL WALL BY MEANS OF PANELMATES OR, IF USED JOINTLY W/ 15" LONG (2) TRACK AT BOTTOM, END PANELS SHALL BE CONNECTED TO (2) W/ 1/4"ø-20x3/4" M.S. W/ 7/8"øx3/32" WING NUT OR 1/4"ø-20x3/4" Min. THUMBSCREW INTO TAPPED (2) (EXCEPT AS DESCRIBED ON NOTE (3) BELOW).

(3). FOR CASES WHEN END PANELS ARE USE JOINTLY W/ 15" LONG TRACK (2) AT BOTTOM BUT END PANELS ARE NOT CONNECTED TO BOTTOM TRACK (2), A STOP BAR (8) SHALL BE PROVIDED AT TOP OF SUCH PANELS.

(4). FOR INSTALLATIONS WHEN END PANELS AND SOME INTERIOR PANELS ARE DIRECTLY MOUNTED TO EXISTING SILL WALL BY MEANS OF PANELMATES, ONE INTERIOR PANEL MAY BE USED JOINTLY W/ TRACK (2) AT BOTTOM ATTACHING BOTTOM TRACK TO WALL W/ TWO PANELMATES FOLLOWING SPACING SHOWN ON ELEVATION AND W/ A 3 1/2" Min. EDGE DISTANCE. FOR THIS CASE, INTERIOR PANEL USED JOINTLY W/ (2) DOES NOT NEED TO BE CONNECTED TO (2) BY ANY MEANS. TRACK (2) SHALL BE INSTALLED SUCH THAT ADJACENT PANELS (TO THE LEFT & RIGHT SIDE OF INTERIOR PANEL) HAVE THEIR OVERLAPS RETAINED BY (2).

PRODUCT REVISED
as complying with the Florida Buiding Code
Acceptance No 03-0521.07
Expiration Date 06/26/2008
By [signature]
Miami Dade Product Control Division

F.B.C.(H.V.H.Z.)/MIAMI–DADE COUNTY

5/20/03

TILTECO INC. TILLIT TESTING & ENGINEERING COMPANY 6595 N.W. 36th. St., Ste. 217, VIRGINIA GARDENS, Fl. 33166 Phone : (305)871-1530 . Fax : (305)871-1531 EB-0006719 WALTER A. TILLIT Jr., P. E. FLORIDA Lic. # 44167	E – Z HANG STORM PANEL SYSTEM T.M. (20 GAGE GALVANIZED STEEL)		AS SHOWN SCALE
	ROBICO SHUTTERS, Inc. 4800 S.W. 51st STREET DAVIE, FL. 33314		5/15/03 DATE
			03–095 DRAWING No
			SHEET 13 OF 16

REV. No	DESCRIPTION	DATE	REV. No	DESCRIPTION	DATE
1	OLD 96–297	5/15/03	3	–	–
2	–	–	4	–	–

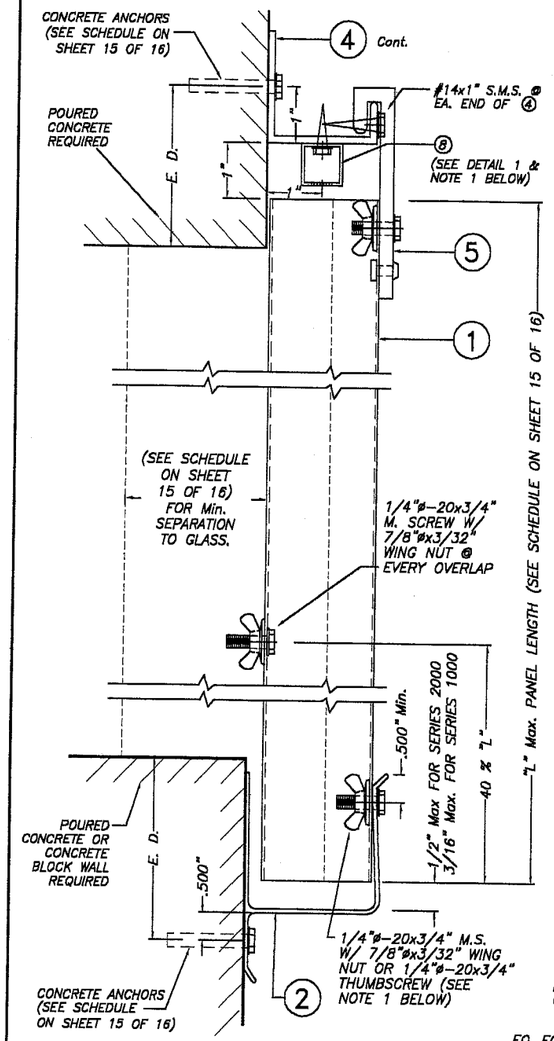

SECTION 1'

SCALE: 3/8" = 1"

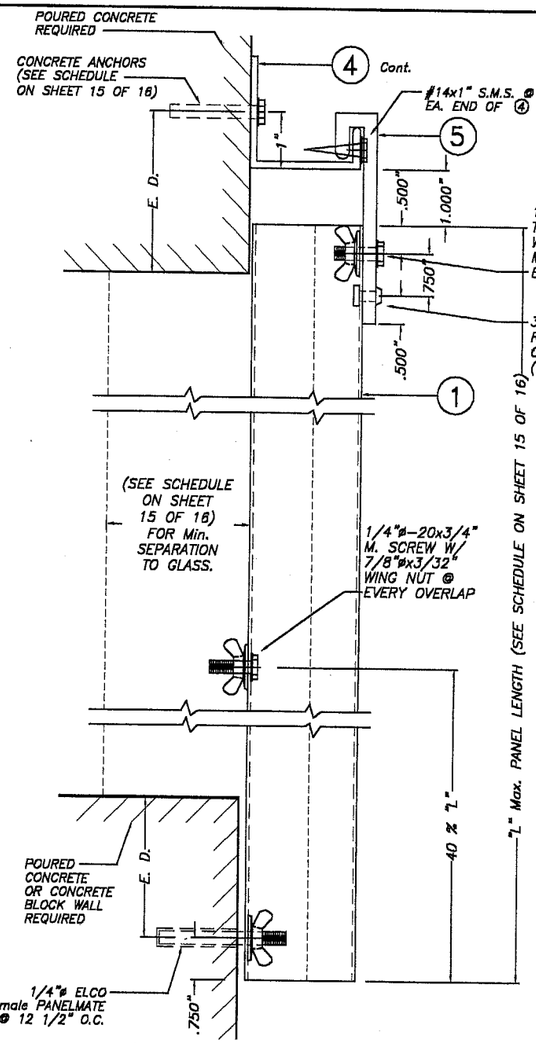

SECTION 2'

SCALE: 3/8" = 1"

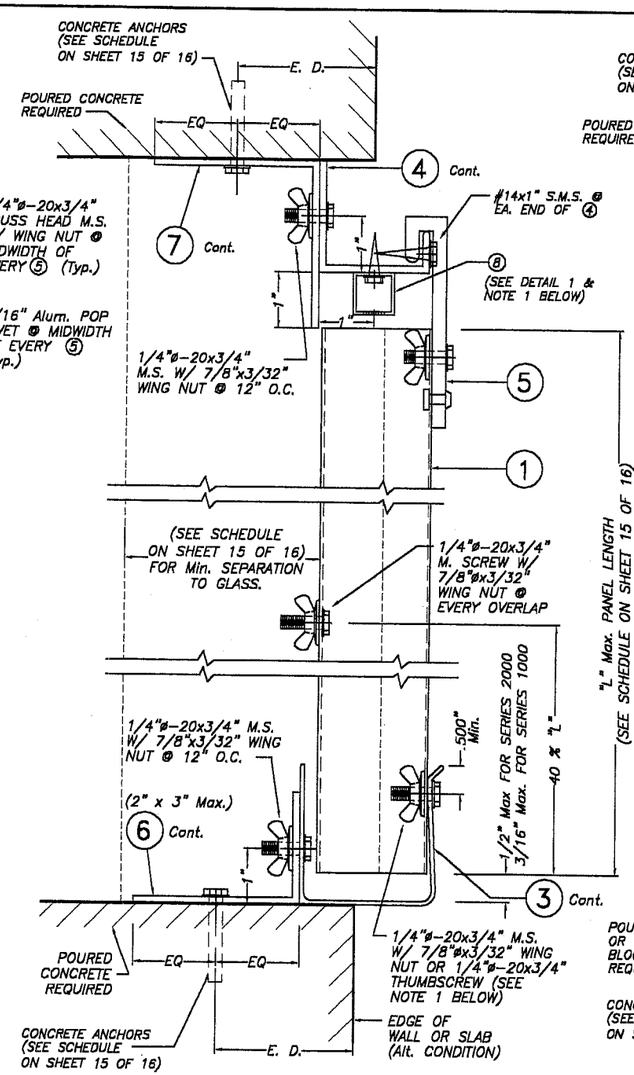

SECTION 3'

SCALE: 3/8" = 1"

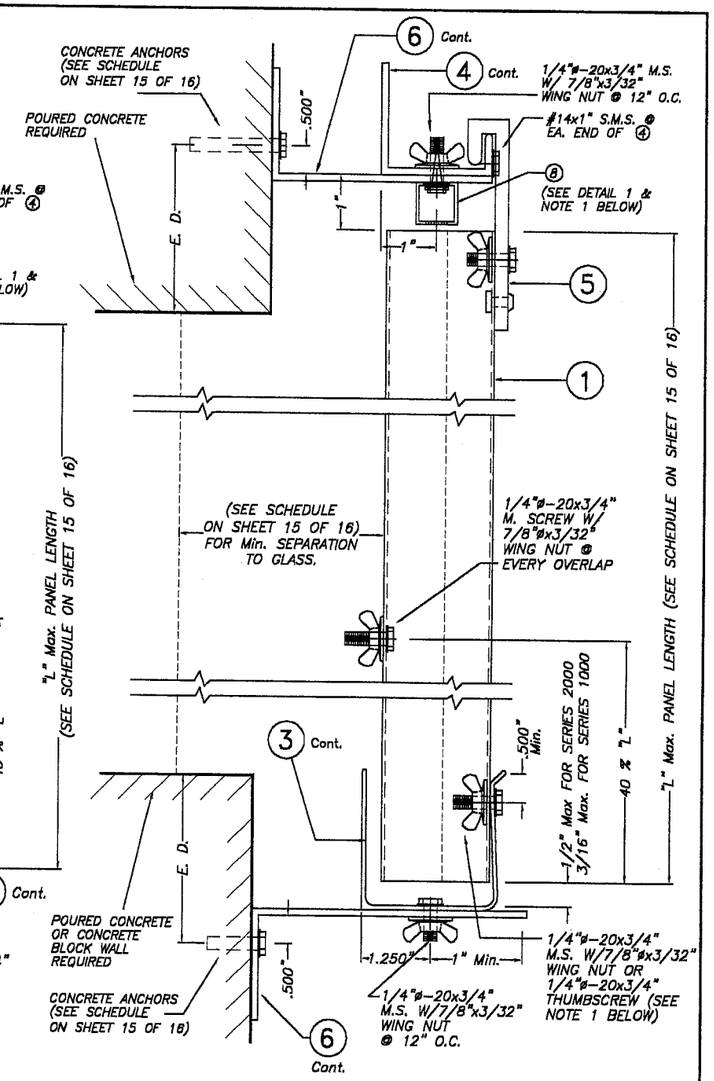

SECTION 4'

SCALE: 3/8" = 1"

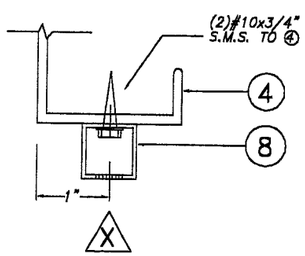

DETAIL 1

SCALE: 1/2" = 1"

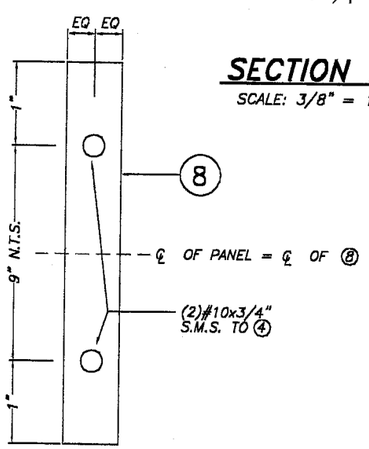

VIEW X

NOTE 1:

SEE SPECIFICATIONS AND REQUIREMENTS FOR USE OF STOP BAR (8) AT TOP AS WELL AS PANEL (1) CONNECTION TO TRACKS (2) OR (3) AT BOTTOM, BASED ON 1000 OR 2000 SERIES INSTALLATION TYPE ON SHEET 13 OF 16.

NOTE FOR COMBINATION OF SECTIONS:

MOUNTING SHOWN ON SECTIONS 1' THROUGH 4' CAN BE COMBINED IN ANY WAY TO SUIT ANY INSTALLATION.

E. D. = EDGE DISTANCE (SEE SCHEDULE ON SHEET 15 OF 16)

PRODUCT REVISED
as complying with the Florida Building Code
Acceptance No 03-0521.07
Expiration Date 06/26/2008
By Helmut A. Moller
Miami Dade Product Control Division

F.B.C.(H.V.H.Z.)/MIAMI-DADE COUNTY

5/20/03

TILTECO INC.
TILLIT TESTING & ENGINEERING COMPANY
6595 N.W. 36th. St., Ste. 217, VIRGINIA GARDENS, Fl. 33166
Phone : (305)871-1330 . Fax : (305)871-1531
EB-0006719
WALTER A. TILLIT Jr., P. E.
FLORIDA Lic. # 44167

E - Z HANG STORM PANEL SYSTEM™
(20 GAGE GALVANIZED STEEL)

ROBICO SHUTTERS, Inc.
4800 S.W. 51st STREET
DAVIE, FL. 33314

REV. No	DESCRIPTION	DATE	REV. No	DESCRIPTION	DATE
1	OLD 98-297	5/15/03	3	–	–
2	–	–	4	–	–

AS SHOWN SCALE
5/15/03 DATE
03-095 DRAWING No
SHEET 14 OF 16

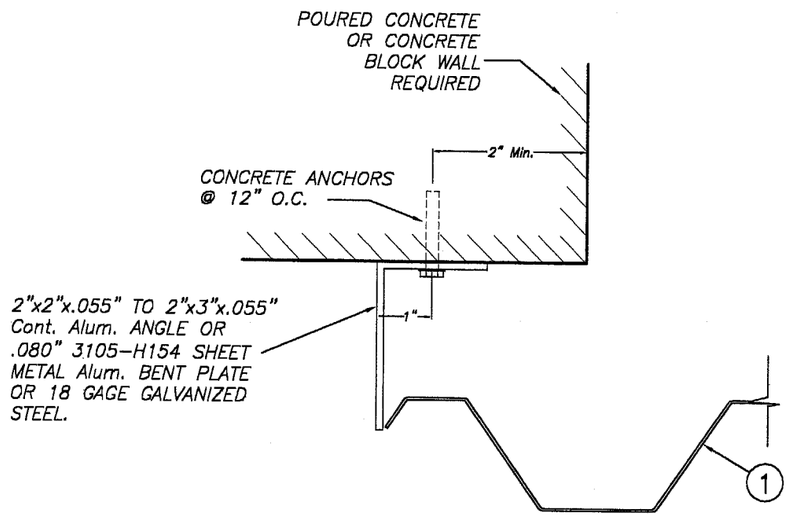

CASE A (Plan)

SCALE: 3/8" = 1"

END CLOSURES DETAILS

MAXIMUM DESIGN PRESSURE RATING "W" (p.s.f.) AND CORRESPONDING MAXIMUM PANEL LENGTH "L" SCHEDULE

(VALID ONLY FOR PANEL INSTALLATIONS AS PER SECTIONS 1' THRU 4', SHEET 14 OF 16).

MAXIMUM DESIGN PRESSURE RATING W (p.s.f.)	Max. PANEL LENGTH L (in.) (SEE SECTIONS)	MINIMUM SEPARATION TO GLASS	PANEL CONDITION	APPLICABLE TO SECTIONS
+66.0, −75.3	70" OR LESS	2 9/16"	BOLTED *	1', 2' & 3'
+66.0, −75.3	70" OR LESS	2 7/8"	BOLTED *	4'

* BOLTED W/ 1/4"ø-20x3/4" S.S. M.S. & WINGNUT AT OVERLAP & 40% OF PANEL LENGTH MEASURED FROM BOTTOM OF PANEL.

MAXIMUM DESIGN PRESSURE RATING "W" (p.s.f.) AND CORRESPONDING MAXIMUM ANCHOR SPACING SCHEDULE FOR INSTALLATIONS INTO CONCRETE AND C.B.S. STRUCTURES *

(VALID ONLY FOR PANEL INSTALLATIONS AS PER SECTIONS 1' THRU 4', SHEET 14 OF 16).

E. D. = EDGE DISTANCE

MAXIMUM DESIGN LOAD W (p.s.f.)	MAXIMUM ANCHORS SPACING FOR E. D. = 3 1/2" **						APPLICABLE TO SECTIONS # & ANY COMBINATION OF THEM	MAXIMUM PANEL LENGTH "L" (in.)
	TAPCONS		CALK-IN		PANELMATES			
	TO CONCRETE	TO MASONRY	TO CONCRETE	TO MASONRY	TO CONCRETE	TO MASONRY		
+66.0, −75.3	12"	N/A	12"	N/A	12"	N/A	1' & 2' (TOP)	70" OR LESS
	12"	4"	12"	5 1/2"	5"	5"	1' (BOTTOM) SERIES 2000 +	
	12"	5 1/2"	12"	8 1/2"	8"	8"	1' (BOTTOM) SERIES 2000 ++	
	N/A	N/A	N/A	N/A	12 1/2"	12 1/2"	2' (BOTTOM)	
	9 1/2"	N/A	9 1/2"	N/A	4 1/2"	N/A	3' (TOP)	
	12"	N/A	12"	N/A	9 1/2"	N/A	3' (BOTTOM)	
	12"	N/A	12"	N/A	12"	N/A	4' (TOP)	
	12"	11"	12"	12"	12"	12"	4' (BOTTOM)	

\+ REQUIRES Max. DISTANCE BETWEEN BOTTOM OF PANEL AND ② TO BE: 1/2"

++ REQUIRES Max. DISTANCE BETWEEN BOTTOM OF PANEL AND ② TO BE: 3/16"

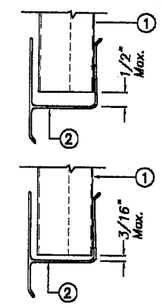

** MAXIMUM ANCHOR SPACINGS ARE VALID FOR 3 1/2" EDGE DISTANCE. FOR E. D. LESS THAN 3 1/2", REDUCE ANCHOR SPACING BY MULTIPLYING SPACING SHOWN ON SCHEDULE BY THE FOLLOWING FACTORS. (NOTE : Min. E. D. FOR CALK-IN ANCHORS IS 2 1/2").
FOR THIS OPERATION TO BE POSIBLE, REDUCED SPACING OBTAINED USING FACTOR SHALL NOT BE LESS THAN MINIMUM SPACING INDICATED FOR EACH ANCHOR TYPE AT ANCHORS LEGEND.

ACTUAL E. D.	FACTOR		
	TAPCON/ PANELMATES	CALK-IN	CF TAP-GRIP
3"	.86	.75	1.00
2 1/2"	.71	.50	.80
2"	.50	–	–

ANCHORS LEGEND

ANCHORS TYPE	ANCHOR MIN. SPACING
TAPCON/ PANELMATES	3.0"
CALK-IN	2.5"
CF TAP-GRIP	3.0"

— SEE SHEET 16 OF 16 FOR ANCHORS TYPE & SPACING FOR INSTALLATIONS INTO WOOD FRAME BUILDINGS.

5/20/03

PRODUCT REVISED
as complying with the Florida Buiding Code
Acceptance No 03-0521.07
Expiration Date 06/26/2008
By Helena A. Molina
Miami Dade Product Control Division

F.B.C.(H.V.H.Z.)/MIAMI-DADE COUNTY

TILLECO INC.
TILLIT TESTING & ENGINEERING COMPANY
6595 N.W. 36th. St., Ste. 217, VIRGINIA GARDENS, Fl. 33166
Phone : (305)871-1330 . Fax : (305)871-1331
EB-0006719
WALTER A. TILLIT Jr., P. E.
FLORIDA Lic. # 44167

E - Z HANG STORM PANEL SYSTEM™
(20 GAGE GALVANIZED STEEL)

ROBICO SHUTTERS, Inc.
4800 S.W. 61st STREET
DAVIE, FL. 33314

REV. No	DESCRIPTION	DATE	REV. No	DESCRIPTION	DATE
1	OLD 98-297	5/15/03	3	–	–
2	–	–	4	–	–

AS SHOWN SCALE
5/15/03 DATE
03-095 DRAWING No
SHEET 15 OF 16

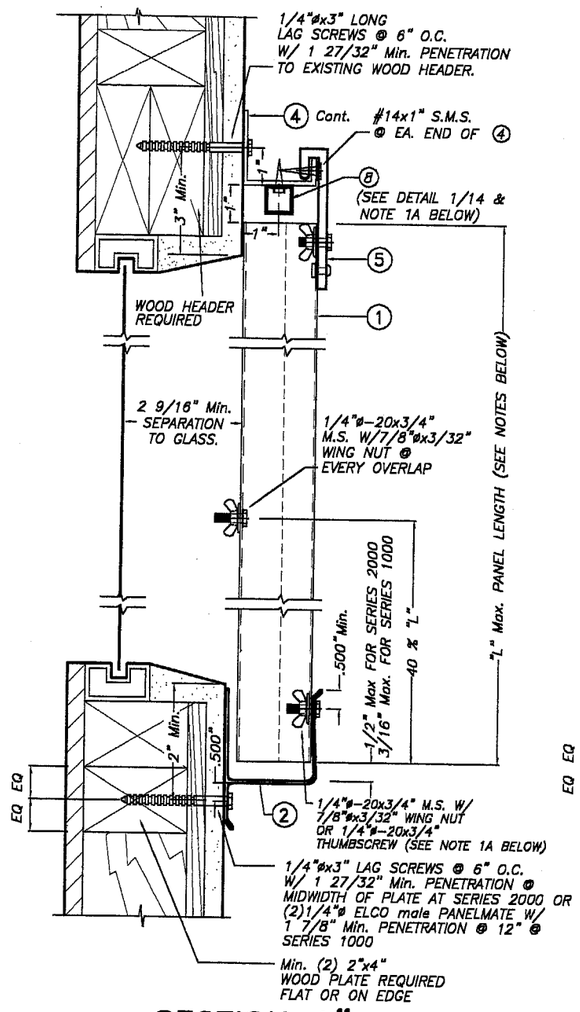

SECTION 1"

SCALE: 1/4" = 1"

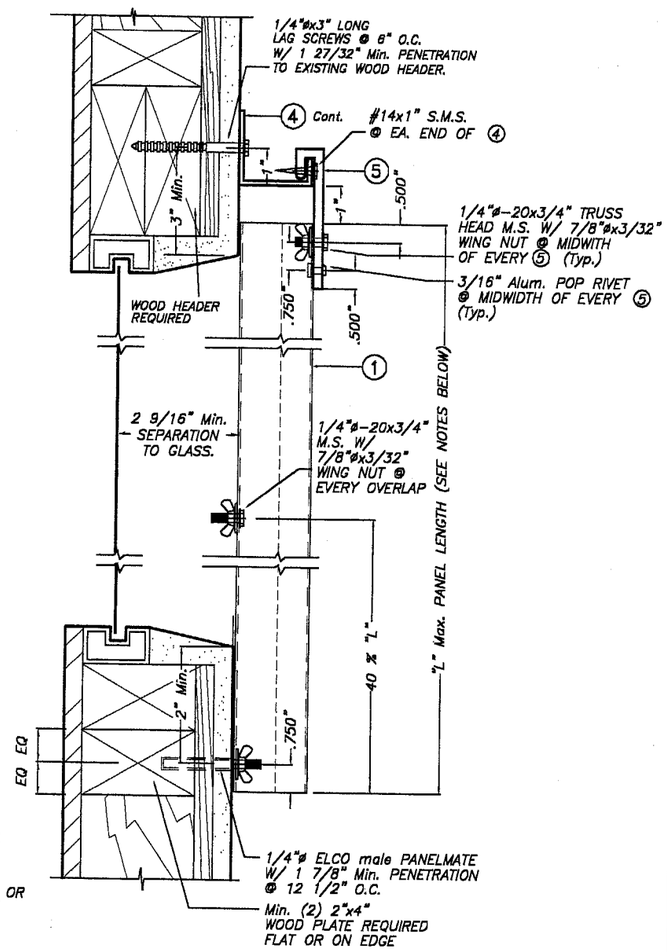

SECTION 2"

SCALE: 1/4" = 1"

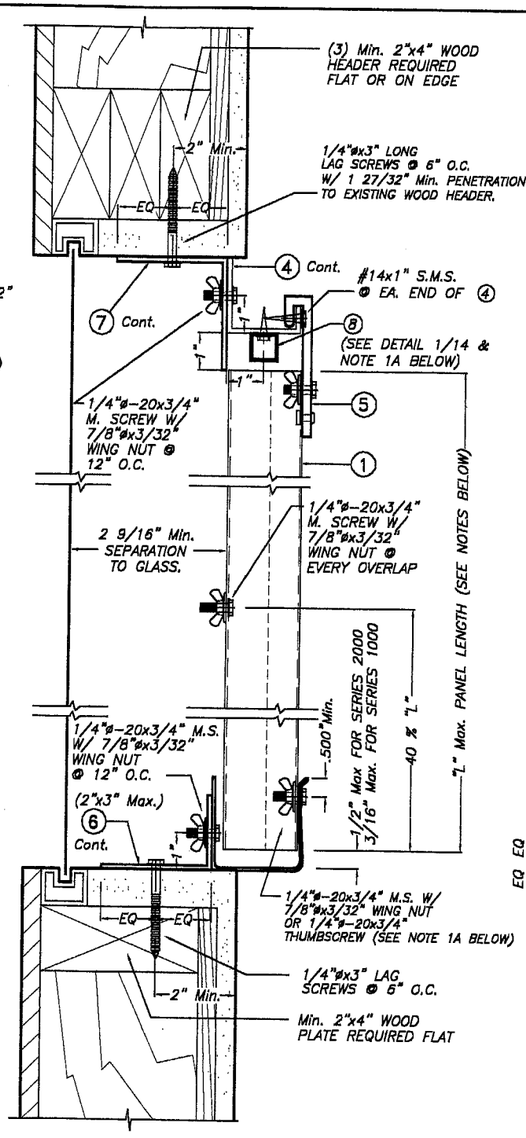

SECTION 3"

SCALE: 1/4" = 1"

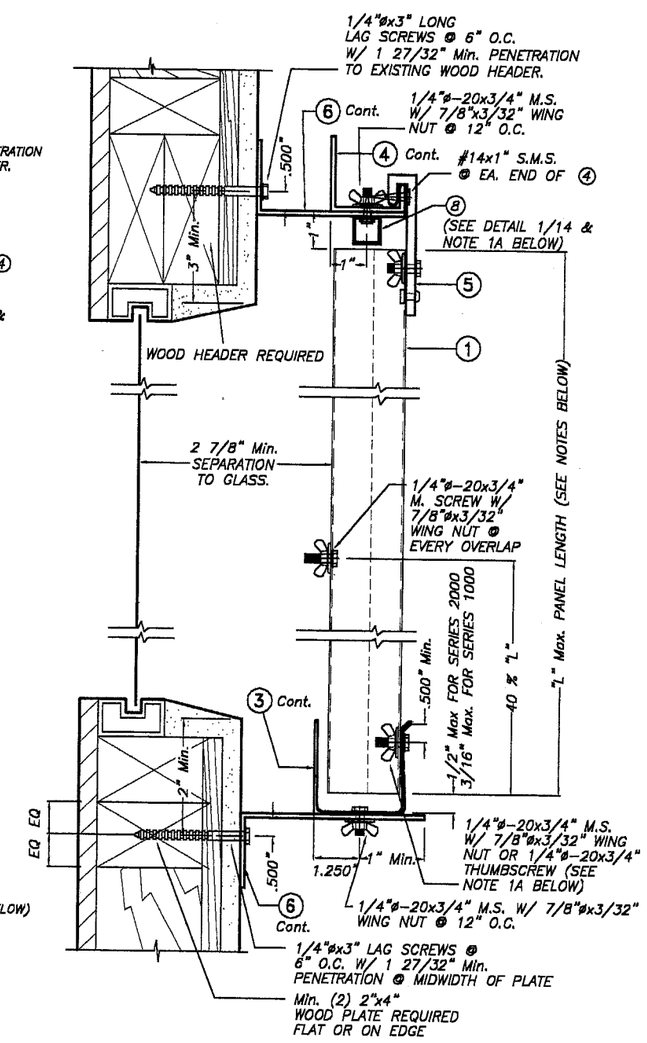

SECTION 4"

SCALE: 1/4" = 1"

NOTES:

1. INSTALLATIONS ARE ONLY VALID FOR BUILDINGS WITH DESIGN LOADS UP TO +66.0, −75.3 psf AND PANEL'S LENGTH UP TO 5'−10".
2. NEW 2" x 6" P. T. TO BE SOUTHERN PINE No. 2, SURFACED DRY WITH 19 % M. M. C. W/ SPECIFIC DENSITY OF 0.55.
3. FOR NEW WOOD FRAME CONSTRUCTION: WOOD MEMBERS TO BE SOUTHERN PINE No. 2, W/ SPECIFIC DENSITY OF 0.55 OR EQUAL.

NOTE 1A:

SEE SPECIFICATIONS AND REQUIREMENTS FOR USE OF STOP BAR 8 AT TOP AS WELL AS PANEL 1 CONNECTION TO TRACKS 2 OR 3 AT BOTTOM, BASED ON 1000 OR 2000 SERIES INSTALLATION TYPE ON SHEET 13 OF 16.

PRODUCT REVISED
as complying with the Florida Building Code
Acceptance No 03-0521.07
Expiration Date 06/26/2008
By Helmy A. Nelson
Miami Dade Product Control Division

INSTALLATION DETAILS ON EXISTING WOOD BUILDINGS FOR E-Z HANG STORM PANEL SYSTEM

F.B.C.(H.V.H.Z.)/MIAMI-DADE COUNTY

NOTE FOR COMBINATION OF SECTIONS:

FLOOR/ WALL/ CEILING MOUNTING SECTIONS CAN BE COMBINED IN ANY WAY TO SUIT ANY INSTALLATION.

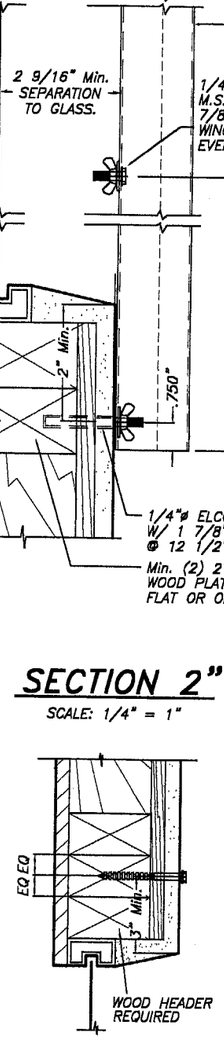

ALTERNATIVE TOP HEADER WOOD FRAME CONDITION & ANCHOR LOCATION

SCALE: 1/4" = 1"

NOTE : SHUTTER TRACKS NOT SHOWN FOR CLARITY

5/20/03

TILTECO INC.
TILLIT TESTING & ENGINEERING COMPANY
6595 N.W. 36th. St., Ste. 217, VIRGINIA GARDENS, Fl. 33166
Phone : (305)871-1530 , Fax : (305)871-1531
EB-0006719
WALTER A. TILLIT Jr., P. E.
FLORIDA Lic. # 44167

E - Z HANG STORM PANEL SYSTEM™
(20 GAGE GALVANIZED STEEL)

ROBICO SHUTTERS, Inc.
4800 S.W. 51st STREET
DAVIE, FL. 33314

REV. No	DESCRIPTION	DATE	REV. No	DESCRIPTION	DATE
1	OLD 98-297	5/15/03	3	–	–
2	–	–	4	–	–

AS SHOWN SCALE

5/15/03 DATE

03-095 DRAWING No

SHEET 16 OF 16