MIAMI-DADE

BUILDING CODE COMPLIANCE OFFICE (BCCO)
PRODUCT CONTROL DIVISION

MIAMI-DADE COUNTY, FLORIDA
METRO-DADE FLAGLER BUILDING
140 WEST FLAGLER STREET, SUITE 1603
MIAMI, FLORIDA 33130-1563
(305) 375-2901 FAX (305) 375-2908

NOTICE OF ACCEPTANCE (NOA)

Glasswall and Doors, Inc.
3550 NW 49 Street
Miami, FL 33142

SCOPE:

This NOA is being issued under the applicable rules and regulations governing the use of construction materials. The documentation submitted has been reviewed by Miami-Dade County Product Control Division and accepted by the Board of Rules and Appeals (BORA) to be used in Miami Dade County and other areas where allowed by the Authority Having Jurisdiction (AHJ).

This NOA shall not be valid after the expiration date stated below. The Miami-Dade County Product Control Division (In Miami Dade County) and/or the AHJ (in areas other than Miami Dade County) reserve the right to have this product or material tested for quality assurance purposes. If this product or material fails to perform in the accepted manner, the manufacturer will incur the expense of such testing and the AHJ may immediately revoke, modify, or suspend the use of such product or material within their jurisdiction. BORA reserves the right to revoke this acceptance, if it is determined by Miami-Dade County Product Control Division that this product or material fails to meet the requirements of the applicable building code.

This product is approved as described herein, and has been designed to comply with the High Velocity Hurricane Zone of the Florida Building Code.

DESCRIPTION: Series 102 Aluminum Single Hung Window – Small Missile Impact Resistant

APPROVAL DOCUMENT: Drawing No. **SH-102 S**, titled "Series #102 Single Hung Small Missile", Sheets 1 through 5 of 5, dated 08/20/02 with revision #4 dated 08/25/03, prepared by manufacturer, signed and sealed by Kelvyn A. Whitfield, P.E., bearing the Miami-Dade County Product Control Revision stamp with the Notice of Acceptance number and expiration date by the Miami-Dade County Product Control Division.

MISSILE IMPACT RATING: Small Missile Impact

LABELING: Each unit shall bear a permanent label with the manufacturer's name or logo, city, state and following statement: "Miami-Dade County Product Control Approved", unless otherwise noted herein.

RENEWAL of this NOA shall be considered after a renewal application has been filed and there has been no change in the applicable building code negatively affecting the performance of this product.

TERMINATION of this NOA will occur after the expiration date or if there has been a revision or change in the materials, use, and/or manufacture of the product or process. Misuse of this NOA as an endorsement of any product, for sales, advertising or any other purposes shall automatically terminate this NOA. Failure to comply with any section of this NOA shall be cause for termination and removal of NOA.

ADVERTISEMENT: The NOA number preceded by the words Miami-Dade County, Florida, and followed by the expiration date may be displayed in advertising literature. If any portion of the NOA is displayed, then it shall be done in its entirety.

INSPECTION: A copy of this entire NOA shall be provided to the user by the manufacturer or its distributors and shall be available for inspection at the job site at the request of the Building Official.

This NOA **revises NOA # 02-0805.10** and consists of this page 1 and evidence pages E-1 and E-2, as well as approval document mentioned above.

The submitted documentation was reviewed by **Manuel Perez, P.E.**

PRODUCT CONTROL ACCEPTED

Glasswall and Doors, Inc.

NOTICE OF ACCEPTANCE: EVIDENCE SUBMITTED

A. DRAWINGS

1. Manufacturer's die drawings and sections.
2. Drawing No. **SH-102 S**, titled "Series #102 Single Hung Small Missile", Sheets 1 through 5 of 5, dated 08/20/02 with revision #4 dated 08/25/03, prepared by manufacturer, signed and sealed by Kelvyn A. Whitfield, P.E.

B. TESTS

Submitted under NOA# 02-0805.10

1. Test reports on 1) Large Missile Impact Test per FBC, TAS 201-94
   2) Small Missile Impact Test per FBC, TAS 201-94
   3) Cyclic Wind Pressure Loading per FBC, TAS 203-94

   along with marked-up drawings and installation diagram of one unit of O/X-O/X-O/X-O/X configuration single hung windows mulled together, prepared by Fenestration Testing laboratory, Inc., Test Report No. **FTL-3220**, dated 12/4/01, signed and sealed by Luis Antonio Figueredo, P.E.
2. Test reports on 1) Large Missile Impact Test per FBC, TAS 201-94
   2) Small Missile Impact Test per FBC, TAS 201-94
   3) Cyclic Wind Pressure Loading per FBC, TAS 203-94

   along with marked-up drawings and installation diagram of unit of O-O-O-O configuration aluminum fixed windows mulled together, prepared by Fenestration Testing laboratory, Inc., Test Report No. **FTL-3221**, dated 11/28/01, signed and sealed by Luis Antonio Figueredo, P.E.
3. Test reports on 1) Air Infiltration Test, per FBC, TAS 202-94
   2) Uniform Static Air Pressure Test, Loading per FBC, TAS 202-94
   3) Water Resistance Test, per FBC, TAS 202-94
   4) Large Missile Impact Test per FBC, TAS 201-94
   5) Large Missile Impact Test per FBC, TAS 201-94
   6) Cyclic Wind Pressure Loading per FBC, TAS 203-94
   7) Forced Entry Test, per FBC 2411 3.2.1 and TAS 202-94

   along with marked-up drawings and installation diagram of one unit of O-O-O/X configuration aluminum fixed and single hung windows mulled together, prepared by Fenestration Testing laboratory, Inc., Test Report No. **FTL-3222**, dated 11/26/01, signed and sealed by Luis Antonio Figueredo, P.E.

Manuel Perez, P.E.
Product Control Examiner
NOA No. 03-0527.05
Expiration Date: October 24, 2007
Approval Date: October 9, 2003

NOTICE OF ACCEPTANCE: EVIDENCE SUBMITTED

C. CALCULATIONS

1. Anchor Calculations, dated 4/11/03, prepared, signed and sealed by Kelvyn A. Whitfield, P.E.

Submitted under NOA# 02-0805.10

2. Anchor Calculations and structural analysis, dated Feb. 20, 2002, with addendum letter dated Sept. 02, 2002, prepared, signed and sealed by Kelvyn A. Whitfield, P.E.

D. QUALITY ASSURANCE

1. Miami Dade Building Code Compliance Office (BCCO).

E. MATERIAL CERTIFICATIONS

Submitted under NOA# 02-0805.10

1. Notice of Acceptance No. **01-1204.01** issued to E.I. DuPont DeNemours for "Sentry Glass Plus" dated 01/17/02, expiring on 01/14/07.
2. Notice of Acceptance No. **01-0205.02** issued to Solutia Inc. for their "Saflex /Keepsafe Maximum" dated 05/17/01, expiring on 05/21/06.

F. STATEMENTS

1. None

G. OTHER

1. Notice of Acceptance No. **02-0805.10** issued to Glasswall and Doors, Inc., for their Series 102 Aluminum Single Hung Window, approved on 10/24/02 and expiring on 10/24/07.

Manuel Perez, P.E.
Product Control Examiner
NOA No 03-0527.05
Expiration Date: October 24, 2007
Approval Date: October 9, 2003

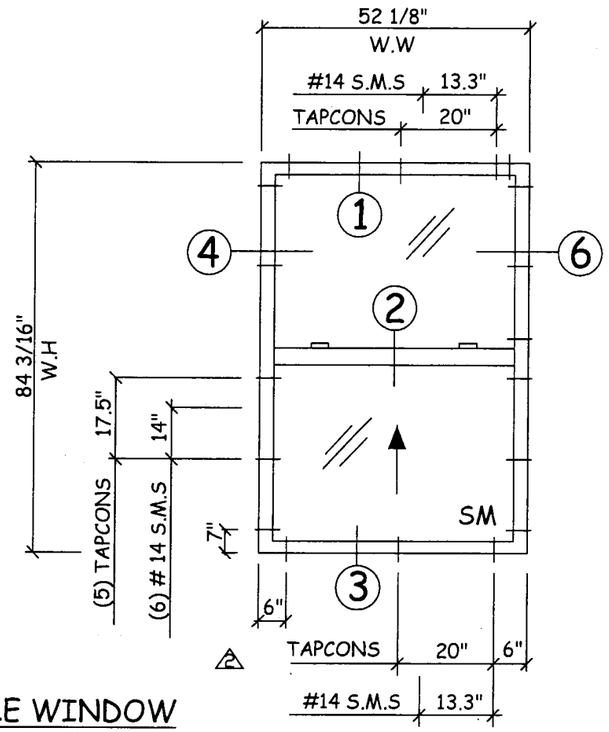

SINGLE WINDOW
Exterior View

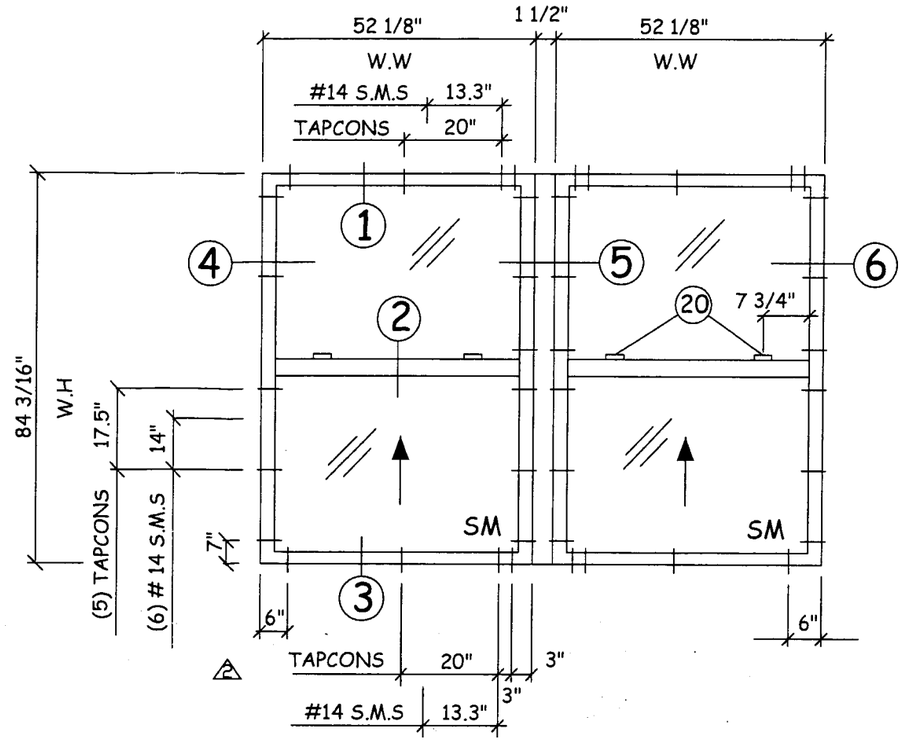

DOUBLE WINDOW
Exterior view

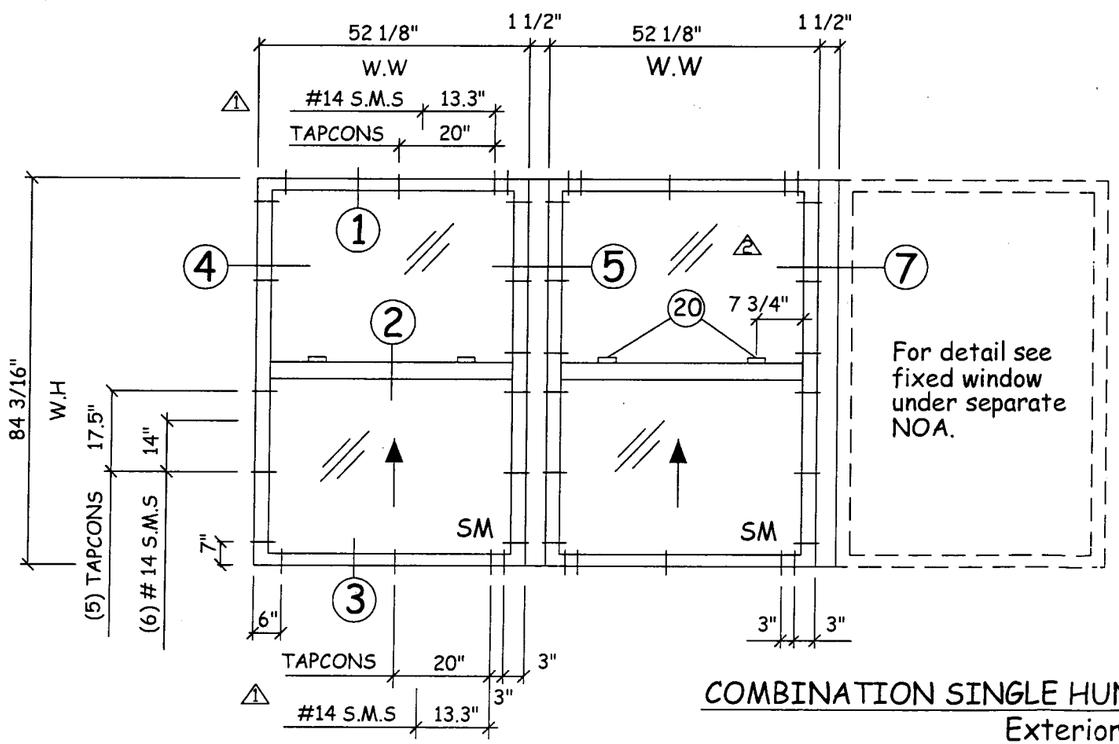

COMBINATION SINGLE HUNG AND FIXED WINDOW
Exterior view

"SMALL MISSILE"

WINDOW DIMENSIONS		DESIGN LOAD CAPACITY (P.S.F)	
MAX WIDTH	MAX HEIGHT	POSITIVE	NEGATIVE
52 1/8"	84 3/16"	100	100

GLASS: 1/4" TEMPERED 0.060 SAFLEX PVB BY SOLUTIA / 1/4" TEMPERED.

PRODUCT REVISED
as complying with the Florida
Buiding Code
Acceptance No 03-0527.05
Expiration Date OCT. 24, 2007
By Manuel Perez
Miami Dade Product Control
Division

ELEVATION SHEET

8/25/03

Glasswall
3550 NW 49th Street
Miami, Florida 33142
Tel +305-638-5151 - Fax +305-638-5158

Series # 102
Single Hung
Small Missile

Revision

No	Date	By	Description
1	09-13-02	G.S	General
2	09-25-02	G.S	General
3	03-22-03	G.S	Add sheet 2A
4	08-25-03	G.S	General

Date	08-20-02
Scale	As noted
Design by	G. S.
Drawing by	L. R.
Checked by	G. S.
Drawing No.	SH-102 S
Sheet	1 of 5

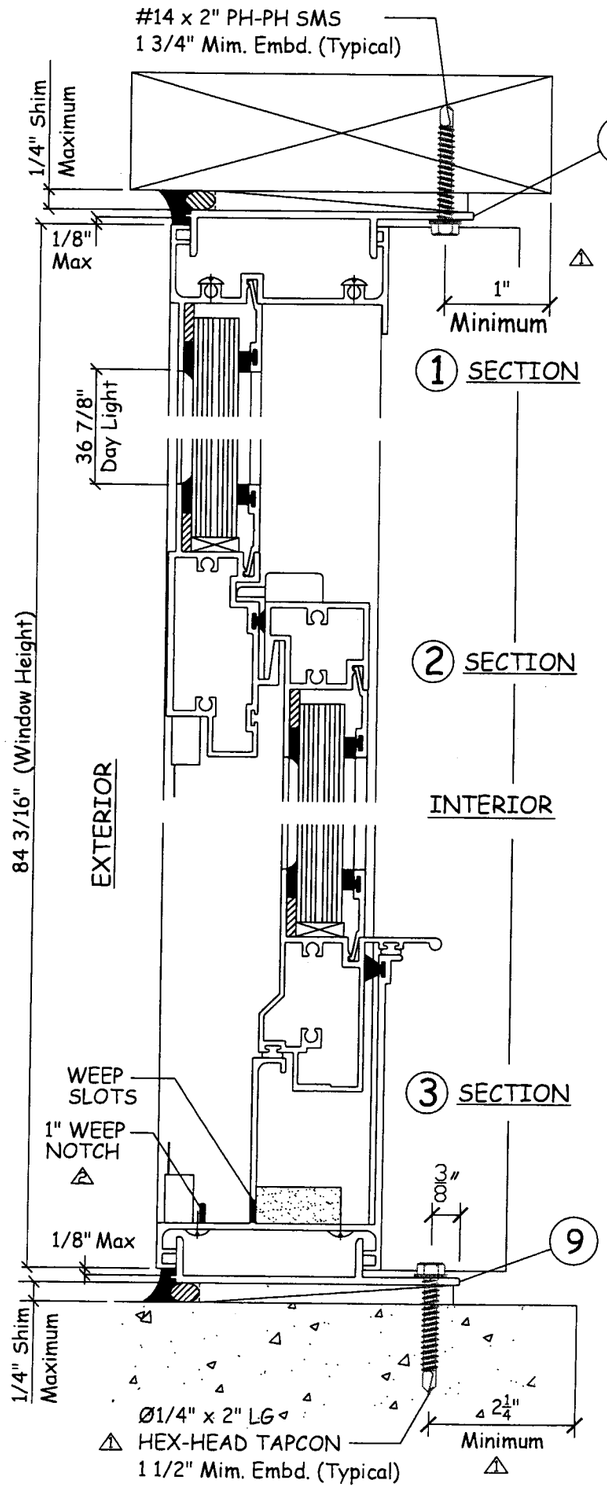

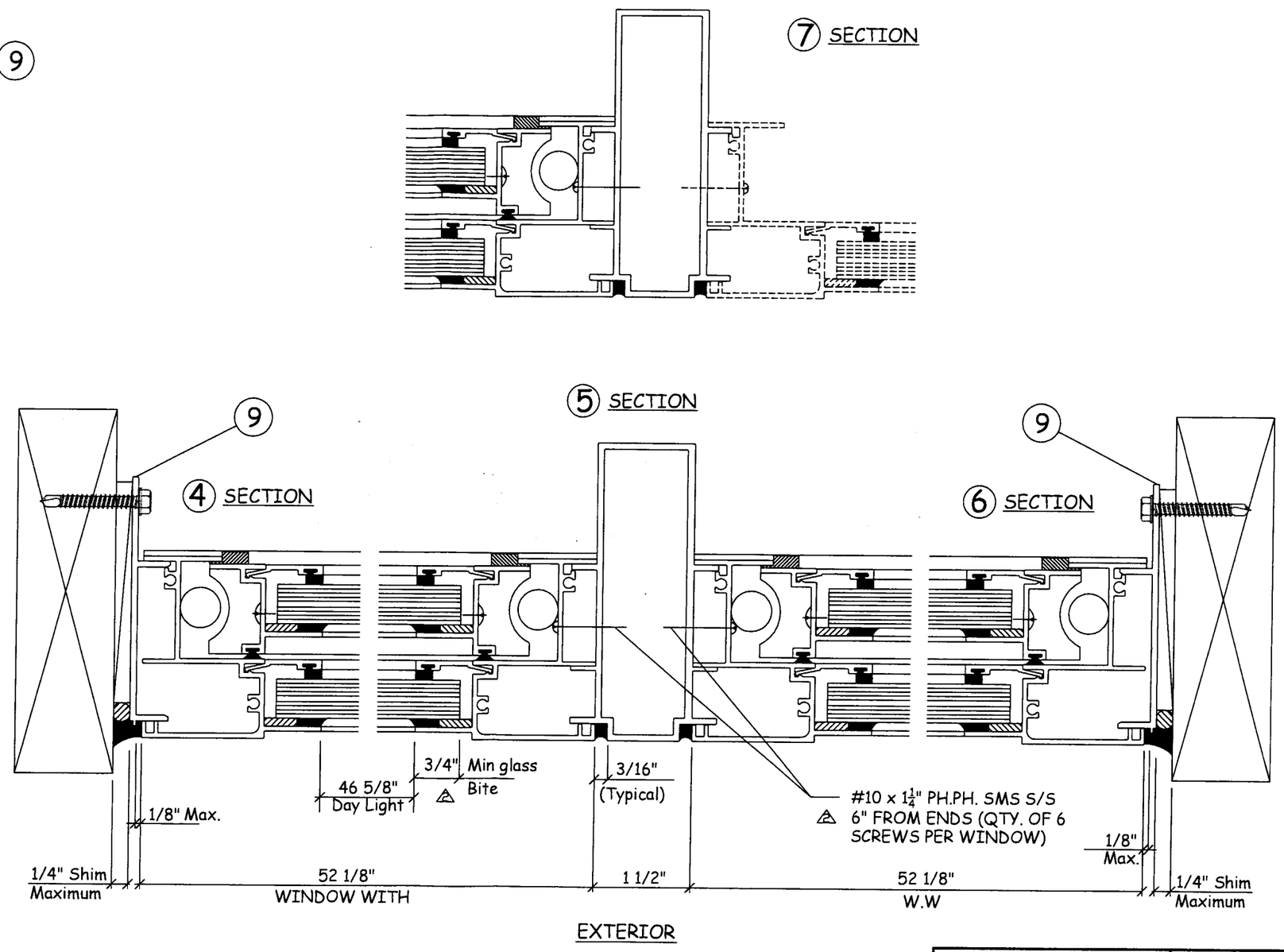

Glasswall
3550 NW 49th Street
Miami, Florida 33142
Tel +305-638-5151 - Fax +305-638-5158

Series # 102
Single Hung
Small Missile

Revision

No	Date	By	Description
1	09-13-02	G.S	General
2	09-25-02	G.S	General
4	08-25-03	G.S	General

Date	08-20-02
Scale	As noted
Design by	G. S.
Drawing by	L. R.
Checked by	G. S.
Drawing No.	SH-102 S
Sheet	2 of 5

PRODUCT REVISED
as complying with the Florida Buiding Code
Acceptance No 03-0527.05
Expiration Date OCT. 24,2007
By Manuel Perez
Miami-Dade Product Control Division

INSTALLATION SHEET

8/25/03

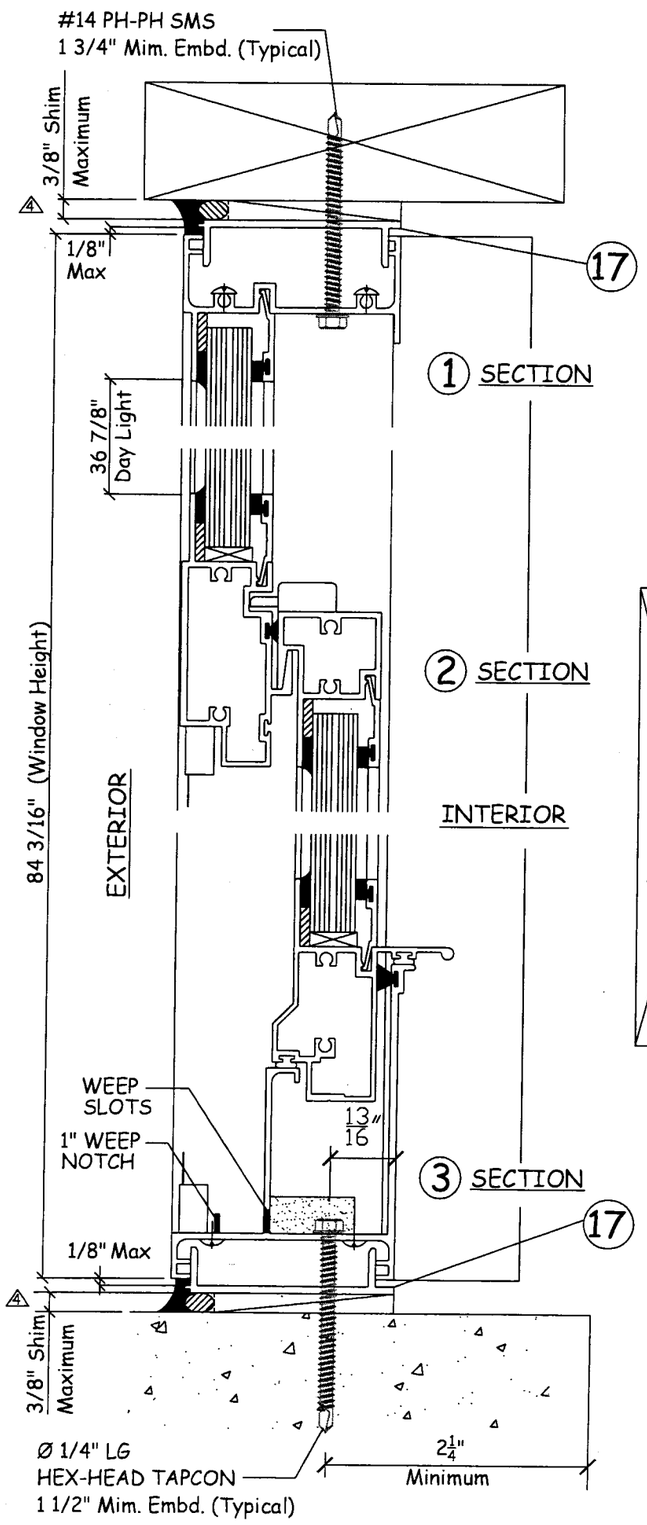

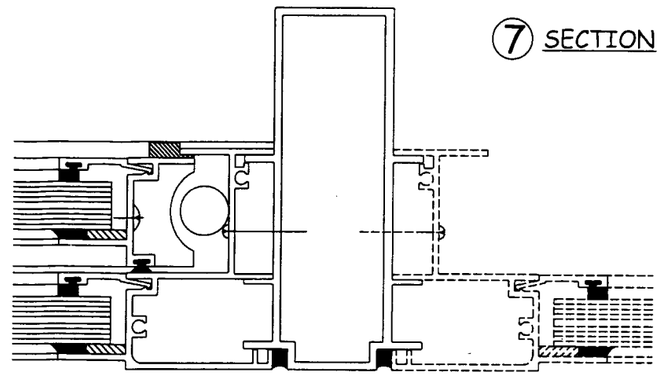

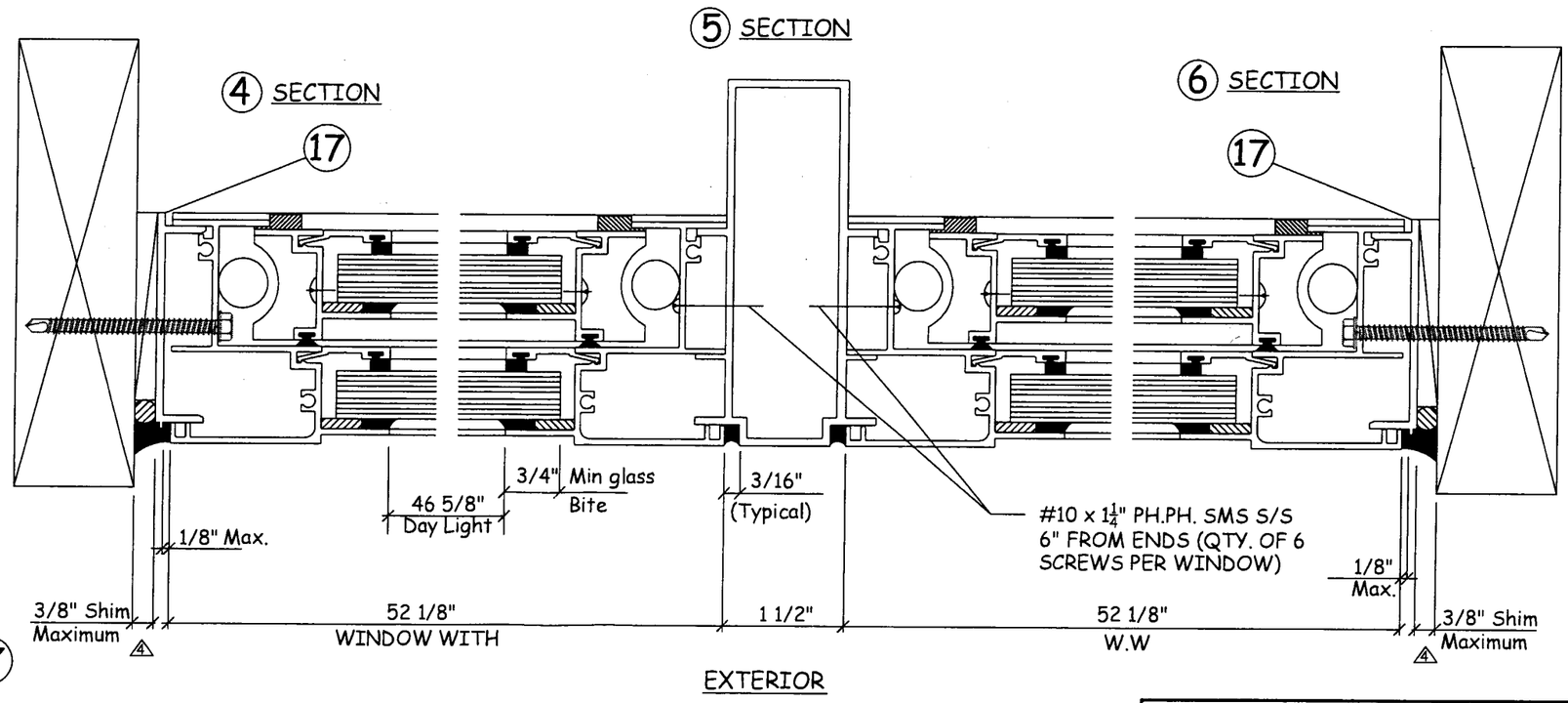

Glasswall
3550 NW 49th Street
Miami, Florida 33142
Tel +305-638-5151 - Fax +305-638-5158

Series # 102
Single Hung
Small Missile

Revision

No	Date	By	Description
3	03-22-03	G.S	New Sheet
4	08-25-03	G.S	General

Date	03-22-03
Scale	As noted
Design by	G. S.
Drawing by	L. R.
Checked by	G. S.
Drawing No.	SH-102 S
Sheet	3 of 5

INSTALLATION SHEET

PRODUCT REVISED
as complying with the Florida
Building Code
Acceptance No. 03-0527.05
Expiration Date Oct. 24, 2007
By Manuel Perez
Miami Dade Product Control
Division

8/25/03

GLASS: 1/4" TEMPERED 0.060 SAFLEX PVB BY SOLUTIA / 1/4" TEMPERED.

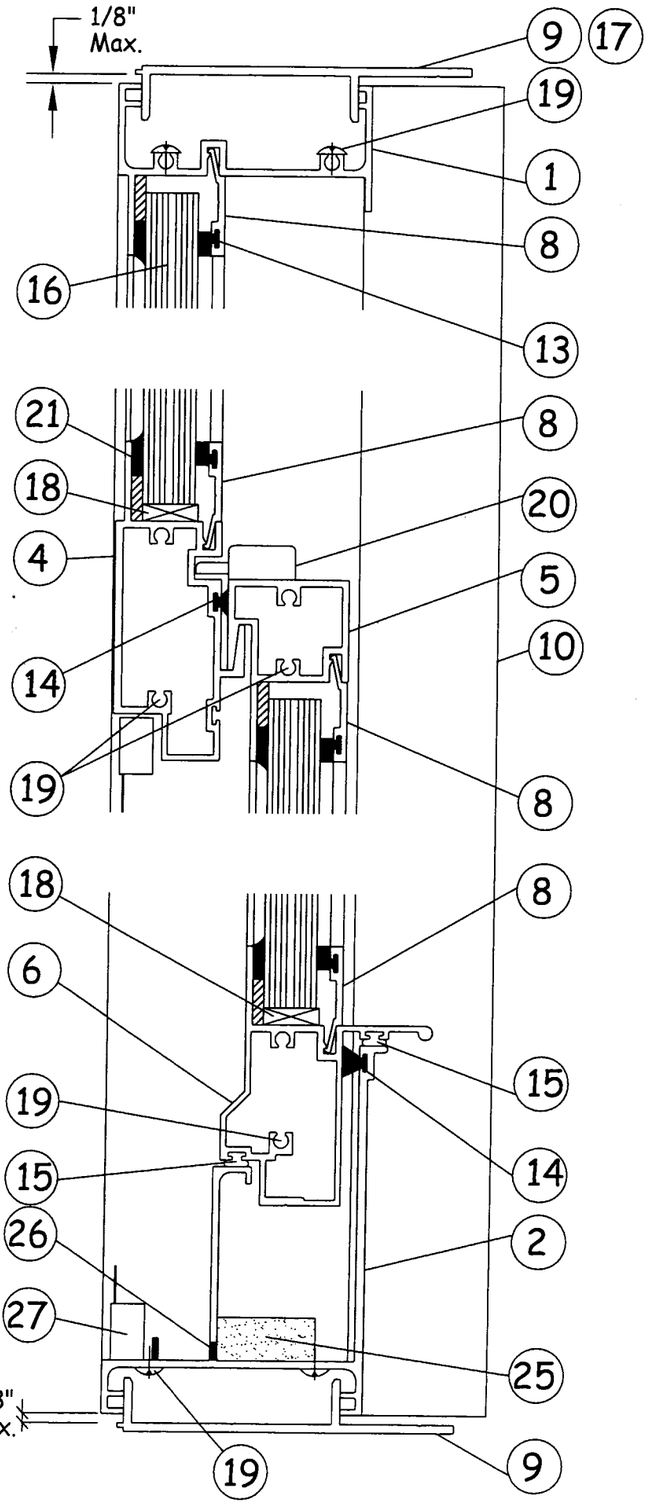

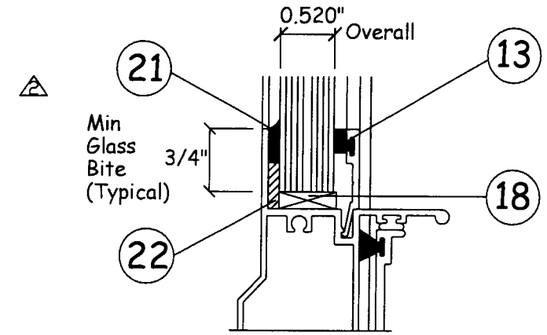

GLAZING DETAIL

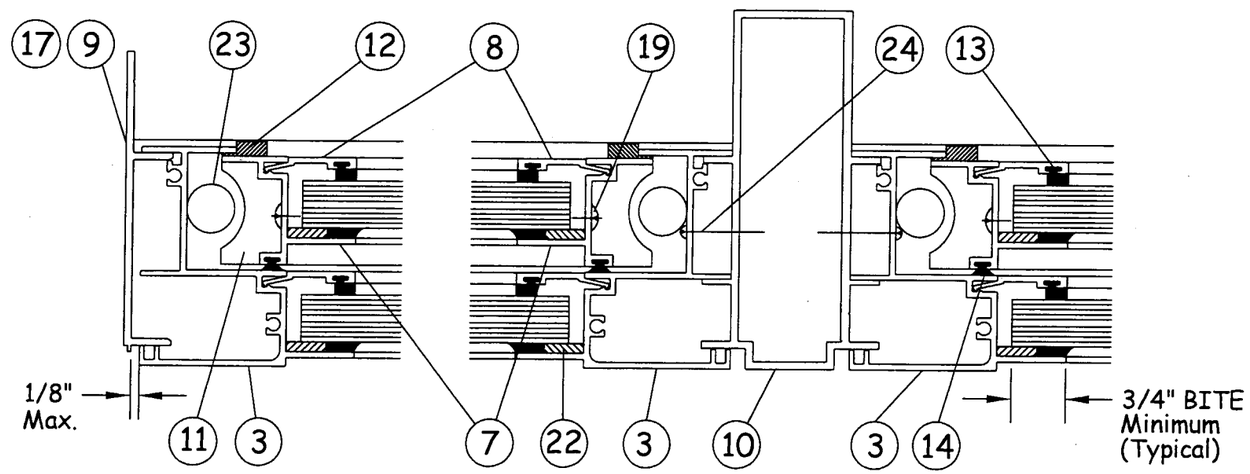

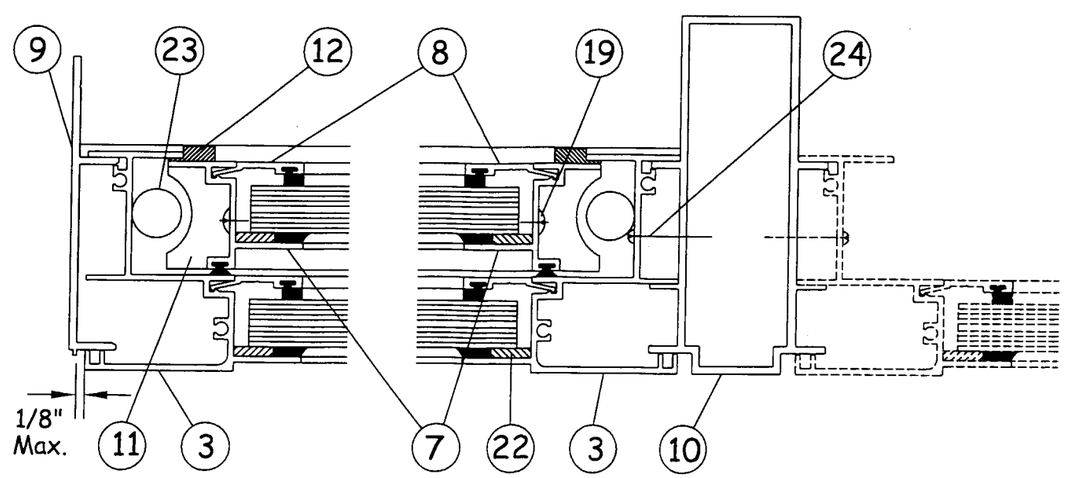

SMALL MISSILE

PRODUCT REVISED
as complying with the Florida
Building Code
Acceptance No. 03-0527.05
Expiration Date OCT. 24, 2007
By Manuel Perez
Miami Dade Product Control
Division

PARTS LIST

8/25/03

Glasswall
3550 NW 49th Street
Miami, Florida 33142
Tel +305-638-5151 - Fax +305-638-5158

Series # 102
Single Hung
Small Missile

Revision

No	Date	By	Description
1	09-13-02	G.S	General
2	09-25-02	G.S	General
4	08-25-03	G.S	General

Date	
Scale	As noted
Design by	G. S.
Drawing by	L. R.
Checked by	G. S.

Drawing No.
SH-102 S

Sheet 4 of 5

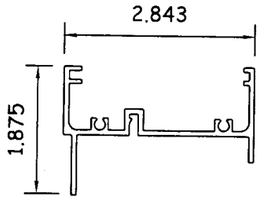

Head #102-001
Material: Aluminum
Alloy: 6005-T5
Typical wall: 0.075

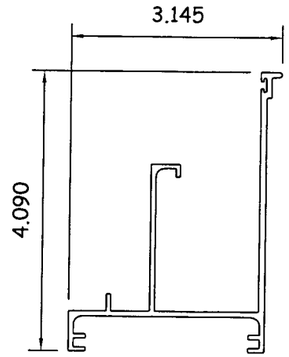

Sill #102-002
Material: Aluminum
Alloy: 6005-T5
Typical wall: 0.075

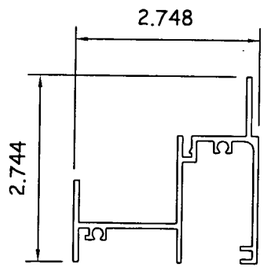

Jamb #102-003
Material: Aluminum
Alloy: 6005-T5
Typical wall: 0.075

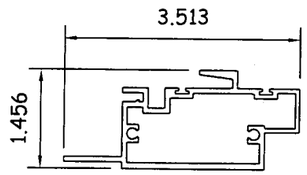

Meeting Rail #102-004
Material: Aluminum
Alloy: 6005-T5
Typical wall: 0.075

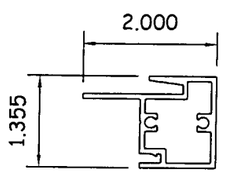

Top Vent #102-005
Material: Aluminum
Alloy: 6005-T5
Typical wall: 0.075

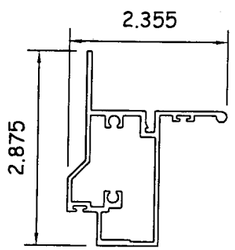

Bottom Vent #102-006
Material: Aluminum
Alloy: 6005-T5
Typical wall: 0.075

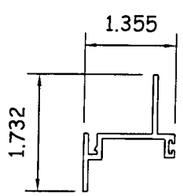

Side Rail #102-007
Material: Aluminum
Alloy: 6005-T5
Typical wall: 0.075

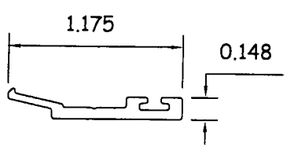

Glazing Bead #102-008
Material: Aluminum
Alloy: 6005-T5
Typical wall: 0.075

Item Number	Part Number	Part Name	A single window Required	Remarks
1	102-001	Head	1	Frame
2	102-002	Sill	1	Frame
3	102-003	Jamb	2	Frame
4	102-004	Meeting Rail	1	Frame
5	102-005	Top Vent	1	Frame Vent
6	102-006	Bottom Vent	1	Frame Vent
7	102-007	Side Rail	2	Frame Vent
8	102-008	Glazing Bead	8	
9	102-009	Anchor	4	Continuous around frame perimeter.
10	102-010	Mullion		
11	102-00A/B	Top Guide	2	M&M Plastics
12	102-000	Plastic Guide	4	M&M Plastics
13	GW-100	Vinyl Glass Spacer		Prototype Plastic Extrusion Co., Inc.
14	#568-61279	Fin Seal Pile		Prototype Plastic Extrusion Co., Inc.
15	#692-FP-448V-B	Bulb Vinyl		Prototype Plastic Extrusion Co., Inc.
16	Small Missile	9/16" THK Glass	Solutia Saflex/keepsafe	1/4" Tempered / 0.060" PVB / 1/4" Tempered.
17	102-009 A	Anchor	4	Continuous around frame perimeter (Leg rip)
18	Setting Block	EPDM	2 per lite	3/16" THK. x 1/2" x 4" LG.
19	Fastener	#10 x 1" Ph-Ph SMS SS		Assembly frame and Assembly frame panel
20	SL-106R-60	Sash Lock surface mount cam lock	2 per sash	Attach w/(2)#8 x 1/2 FH-PH-SMS SS Company Door & Window Hardware
21	GE-4000	Structural Silicone		
22	Foam Tape	3/16 x 1/2		Capital Tape Company
23	Balance	Ultra-lift	2	Caldwell (attached w/#8 x 1 1/4 LG PH-PH SMS SS
24	Fastener	#10 x 1 1/4" Ph-Ph SMS SS		Attach window to mullion
25	Baffle (20PPI)	1" x 1 1/4" x 4" LG	2	Merry Wheather one at each weep hole
26	Weephole	1/4" x 1" LG	2	At 3" from each jamb.
27		Screen	1	

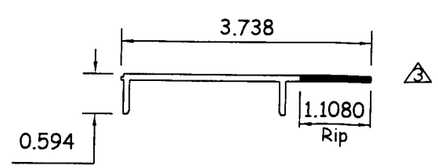

Anchor #102-009 A

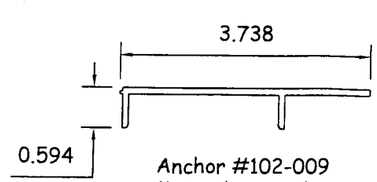

Anchor #102-009
Material: Aluminum
Alloy: 6005-T5
Typical wall: 0.090

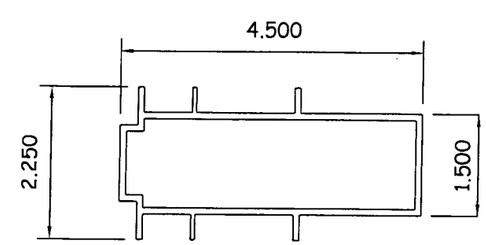

Mullion #102-010
Material: Aluminum
Alloy: 6005-T5
Typical wall: 0.094

PRODUCT REVISED
as complying with the Florida Buiding Code
Acceptance No. 03-0527.05
Expiration Date OCT. 24, 2007
By Manuel Perez
Miami Dade Product Control Division

PARTS LIST

8/25/03

Glasswall
3550 NW 49th Street
Miami, Florida 33142
Tel +305-638-5151 - Fax +305-638-5158

Series # 102
Single Hung
Small Missile

Revision

No	Date	By	Description
1	09-13-02	G.S	General
2	09-25-02	G.S	General
3	03-22-03	G.S	Anchor Rip
4	08-25-03	G.S	General

Date	08-20-02
Scale	As noted
Design by	G. S.
Drawing by	L. R.
Checked by	G. S.
Drawing No.	SH-102 S
Sheet	5 of 5