MIAMI-DADE

BUILDING CODE COMPLIANCE OFFICE (BCCO)
PRODUCT CONTROL DIVISION

MIAMI-DADE COUNTY, FLORIDA
METRO-DADE FLAGLER BUILDING
140 WEST FLAGLER STREET, SUITE 1603
MIAMI, FLORIDA 33130-1563
(305) 375-2901 FAX (305) 375-2908

NOTICE OF ACCEPTANCE (NOA)

Sales Associates of South Florida
750 Sample Road
Pompano Beach, Florida 33064

SCOPE:

This NOA is being issued under the applicable rules and regulations governing the use of construction materials. The documentation submitted has been reviewed by Miami-Dade County Product Control Division and accepted by the Board of Rules and Appeals (BORA) to be used in Miami Dade County and other areas where allowed by the Authority Having Jurisdiction (AHJ).

This NOA shall not be valid after the expiration date stated below. The Miami-Dade County Product Control Division (In Miami Dade County) and/or the AHJ (in areas other than Miami Dade County) reserve the right to have this product or material tested for quality assurance purposes. If this product or material fails to perform in the accepted manner, the manufacturer will incur the expense of such testing and the AHJ may immediately revoke, modify, or suspend the use of such product or material within their jurisdiction. BORA reserves the right to revoke this acceptance, if it is determined by Miami-Dade County Product Control Division that this product or material fails to meet the requirements of the applicable building code.

This product is approved as described herein, and has been designed to comply with the High Velocity Hurricane Zone of the Florida Building Code.

DESCRIPTION: SSA / 6.8" Aluminum Accordion Shutter

APPROVAL DOCUMENT: Drawing No. 03-904, titled " Sales Associates Designer Series ", sheets 1 through 6 of 6, prepared by Knezevich & Associates, Inc., dated December 08, 1998, last revision #1 dated June 19, 2003 bearing the Miami-Dade County Product Control Revision stamp with the Notice of Acceptance number and expiration date by the Miami-Dade County Product Control Division.

MISSILE IMPACT RATING: Large and Small Missile Impact

LABELING: Each unit shall bear a permanent label with the manufacturer's name or logo, city, state and the following statement: "Miami-Dade County Product Control Approved", unless otherwise noted herein.

RENEWAL of this NOA shall be considered after a renewal application has been filed and there has been no change in the applicable building code negatively affecting the performance of this product.

TERMINATION of this NOA will occur after the expiration date or if there has been a revision or change in the materials, use, and/or manufacture of the product or process. Misuse of this NOA as an endorsement of any product, for sales, advertising or any other purposes shall automatically terminate this NOA. Failure to comply with any section of this NOA shall be cause for termination and removal of NOA.

ADVERTISEMENT: The NOA number preceded by the words Miami-Dade County, Florida, and followed by the expiration date may be displayed in advertising literature. If any portion of the NOA is displayed, then it shall be done in its entirety.

INSPECTION: A copy of this entire NOA shall be provided to the user by the manufacturer or its distributors and shall be available for inspection at the job site at the request of the Building Official.

This NOA **revises & renews NOA # 00-0501.04** & consists of this page 1 & approval document mentioned above
The submitted documentation was reviewed by **Helmy A. Makar, P.E.**

Helmy A. Makar
06/24/03

PRODUCT CONTROL ACCEPTED

NOA No 03-0527.10
Expiration Date: 06/02/2008
Approval Date: 06/24/2003
Page 1

Print Information: J:\CADD\Associations\SSA\SalesAssociates\03-904\R1-sub_SpecialCase\03-904-01.dwg AVazquez 06/19/2003 10:35:01am 06/12/03 18:14

GENERAL NOTES:

1. THESE APPROVAL DOCUMENTS REPRESENT A SHUTTER SYSTEM ANALYZED WITH THE PROVISION SET FOR THE ISSUANCE OF A NOTICE OF ACCEPTANCE (NOA) BY MIAMI-DADE COUNTY PRODUCT CONTROL DIVISION FOR THE HIGH VELOCITY HURRICANE ZONE (HVHZ) OF THE FLORIDA BUILDING CODE.
2. TO VERIFY THAT THE ANCHORS AS TESTED, ARE NOT OVERSTRESSED IN THESE APPROVAL DOCUMENTS, A 33% INCREASE IN ALLOWABLE STRESS WAS USED IN THE FASTENER ANALYSIS.
3. DETERMINE THE POSITIVE AND NEGATIVE DESIGN LOADS TO USE WHEN REFERENCING THESE DOCUMENTS IN ACCORDANCE WITH THE GOVERNING CODE AND GOVERNING WIND VELOCITY. FOR WIND LOAD CALCULATIONS IN ACCORDANCE WITH ASCE 7-98, A DIRECTIONALITY FACTOR OF Kd =1.0 SHALL BE USED.
4. THESE APPROVAL DOCUMENTS ARE GENERIC AND DO NOT INCLUDE INFORMATION FOR SITE-SPECIFIC APPLICATION OF THIS SHUTTER SYSTEM.
5. THESE APPROVAL DOCUMENTS COMPLY WITH CHAPTER 61G15-23 OF THE FLORIDA ADMINISTRATIVE CODE.
6. THESE APPROVAL DOCUMENTS ARE SUITABLE TO BE APPLIED BY THE CONTRACTOR PROVIDED THE CONTRACTOR DOES NOT DEVIATE FROM THE CONDITIONS DETAILED HEREIN AND THE CONTRACTOR VERIFIES THAT THE EXISTING STRUCTURE DOES NOT DEVIATE IN EITHER FORM OR MATERIAL FROM THE STRUCTURAL SUBSTRATES DETAILED HEREIN.
7. ANY MODIFICATIONS OR ADDITIONS TO THESE APPROVAL DOCUMENTS WILL VOID THE APPROVAL DOCUMENTS.
8. WHEN THE SITE CONDITIONS DEVIATE FROM THESE APPROVAL DOCUMENTS, THE BUILDING OFFICIAL MAY ELECT ONE OF THE FOLLOWING OPTIONS:
   A) REQUIRE THAT SITE SPECIFIC DOCUMENTS BE PREPARED, SIGNED, DATED AND SEALED BY A LICENSED ENGINEER OR REGISTERED ARCHITECT, WHICH DETAIL AND JUSTIFY THE DEVIATION. AS A CONDITION TO THE BUILDING OFFICIAL GRANTING HIS/HER APPROVAL.
   B) REQUIRE THAT A ONE-TIME SITE SPECIFIC APPROVAL BE APPLIED FOR AND SECURED FROM THE MIAMI-DADE COUNTY PRODUCT CONTROL DIVISION.

   WHEN THE SITE CONDITION DEVIATIONS OCCUR WITHIN THE HIGH VELOCITY HURRICANE ZONE AREAS, ONLY OPTION "B" SHALL BE ACCEPTED BY THE BUILDING OFFICIAL.
9. EACH SHUTTER ASSEMBLY SHALL BE PERMANENTLY LABELED AS FOLLOWS:

   SALES ASSOCIATES OF SOUTH FLORIDA
   POMPANO BEACH, FLORIDA
   MIAMI-DADE COUNTY PRODUCT CONTROL APPROVED
10. ALL EXTRUSIONS SHOWN SHALL BE 6063-T6 ALUMINUM ALLOY, U.O.N., WITH A MINIMUM Fy OF 30.125 K.S.I.
11. ALL BOLTS AND WASHERS SHALL BE STAINLESS STEEL WITH A MINIMUM TENSILE STRENGTH OF 60 K.S.I., U.O.N. POP RIVETS SHALL BE 1/4"Ø OR 3/16"Ø 5052 ALUM. ALLOY.
12. ALL SHUTTERS SHALL HAVE A LOCKING MECHANISM CONSISTING OF THUMBSCREW OR PUSH LOCK AT CENTER OR SIDE CLOSURE.
13. TOP AND BOTTOM DETAILS MAY BE INTERCHANGED AS FIELD CONDITIONS REQUIRE.
14. FLOOR TRACKS MAY BE REMOVABLE AT NON-STACKING LOCATIONS. USE REMOVABLE ANCHORS SUCH AS POWERS CALK-IN ANCHORS.

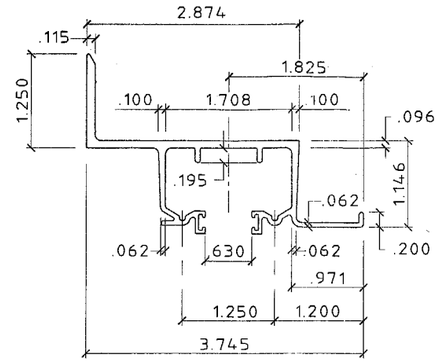

1 WALL HEADER
SCALE: HALF SIZE

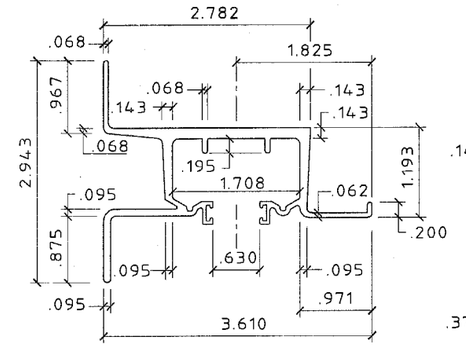

2 WALL HEADER
SCALE: HALF SIZE

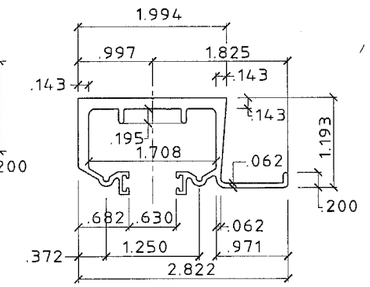

3 HEADER
SCALE: HALF SIZE

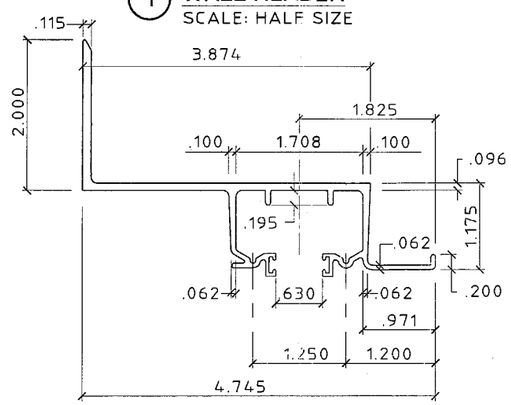

4 BUILD OUT WALL HEADER
SCALE: HALF SIZE

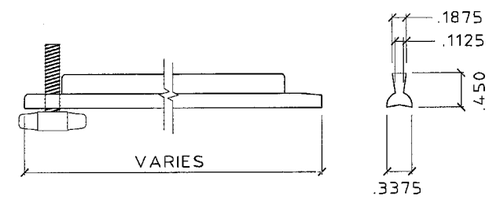

15 ALUMINUM OR PVC LOCK PIN (NOT REQUIRED)
SCALE: HALF SIZE

WHERE LOCK PINS ARE USED, THEY ARE ENGAGED IN THE STACKED POSITION AND ARE NOT REQ'D IN THE CLOSED POSITION.

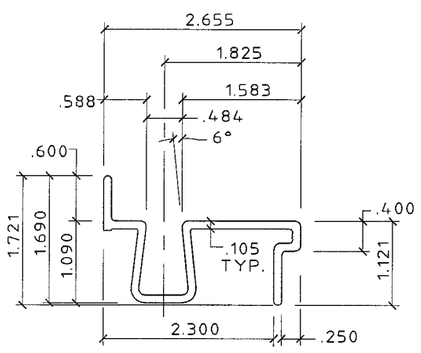

5 BASE SILL
SCALE: HALF SIZE

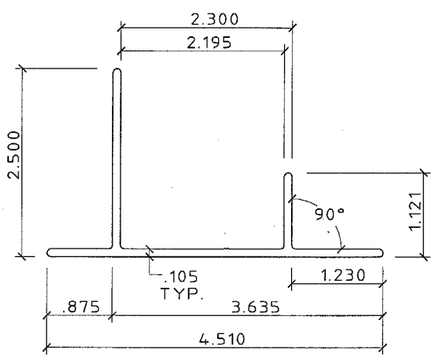

6 BASE TRACK
SCALE: HALF SIZE

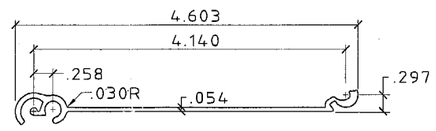

7 TYP. SLAT
SCALE: HALF SIZE

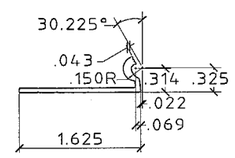

8 STARTER
SCALE: HALF SIZE

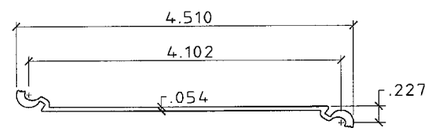

9 ALT. SLAT
SCALE: HALF SIZE

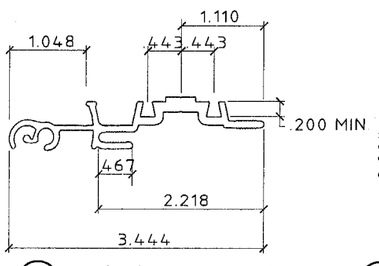

10 MALE/FEMALE LOCK
SCALE: HALF SIZE

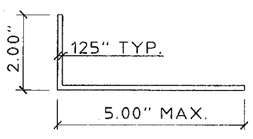

11 ANGLE
SCALE: 3" = 1' - 0"

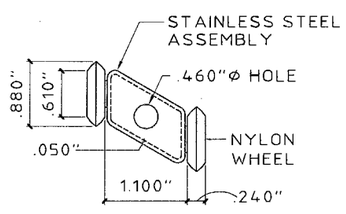

TYP. AT EVERY OTHER INSIDE JOINT AT TOP.

12 ROLLER ASSEMBLY
SCALE: HALF SIZE

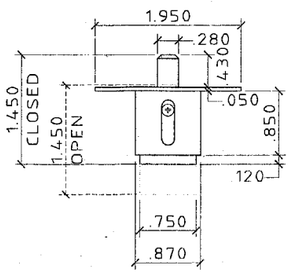

13 BRASS PUSH LOCK
SCALE: HALF SIZE

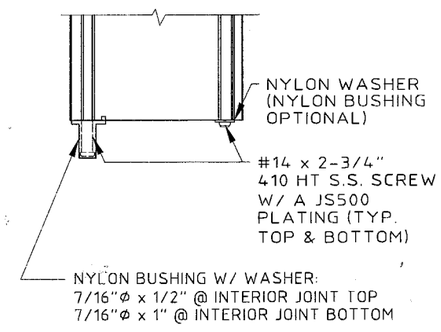

14 BUSHING ASSEMBLY DETAIL
SCALE: HALF SIZE

PRODUCT REVISED
as complying with the Florida Buiding Code
Acceptance No 03-0527.10
Expiration Date 06/02/2008
By Helena A. Molina
Miami Dade Product Control Division

KNEZEVICH & ASSOCIATES, INC.
CONSULTING ENGINEERS • PRODUCT TESTING
1260 N. UNIVERSITY DRIVE, SUITE 180 • FORT LAUDERDALE, FL 33322
TEL: (954) 382-2800 • FAX: (954) 382-2989 • FLORIDA COA #3205
WEBSITE: WWW.KNEZEVICH.COM • E-MAIL: KA@KNEZEVICH.COM

COPYRIGHT © 2003 KNEZEVICH & ASSOCIATES, INC.

6.8-HR SYSTEM LICENSED BY SOUTHERN SHUTTER ASSOCIATION

SALES ASSOCIATES DESIGNER SERIES

SALES ASSOCIATES OF SOUTH FLORIDA
750 SAMPLE ROAD
POMPANO BEACH, FLORIDA 33064
TEL: (954) 943-0744
FAX: (954) 943-0492

V.J. KNEZEVICH
PROFESSIONAL ENGINEER
FL License No. PE0010983

JUN 18 2003

revisions

no	date	by	description
1	06/19/03	LB	PREV. DWG No. 00-916 FBC 2001, GEN. NOTES

SSA I.D.# 042500098254D

date 12/08/1998
scale AS NOTED
drawn by MCR
design by VJK
checked by VJK
drawing no. 03-904
sheet 1 of 6

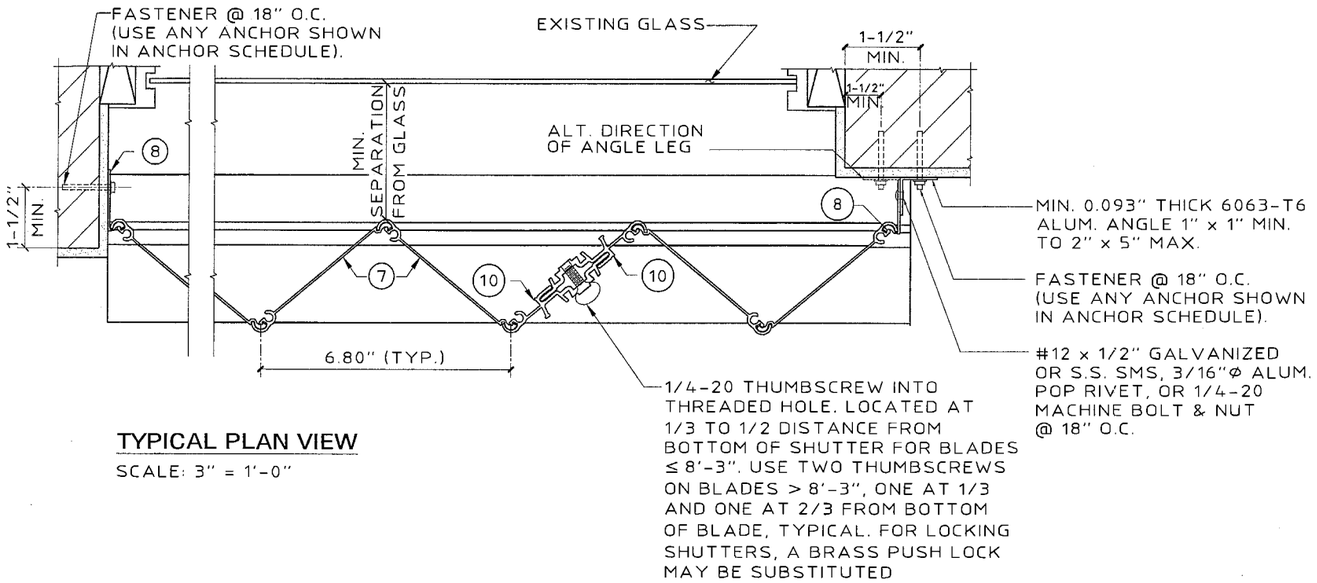

TYPICAL PLAN VIEW

SCALE: 3" = 1'-0"

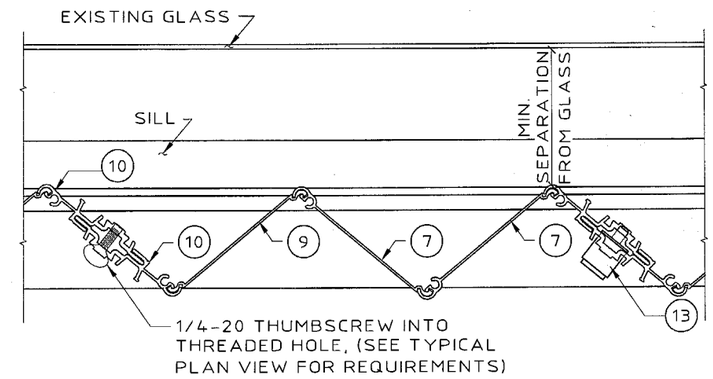

MULTIPLE SHUTTER ASSEMBLY

SCALE: 3" = 1'-0"

NOTE:
STARTERS (8) MUST BE LOCATED TO INSURE FULL DEPLOYMENT OF SHUTTER AND COMPLETE INTERLOCKING OF ADJACENT BLADES.

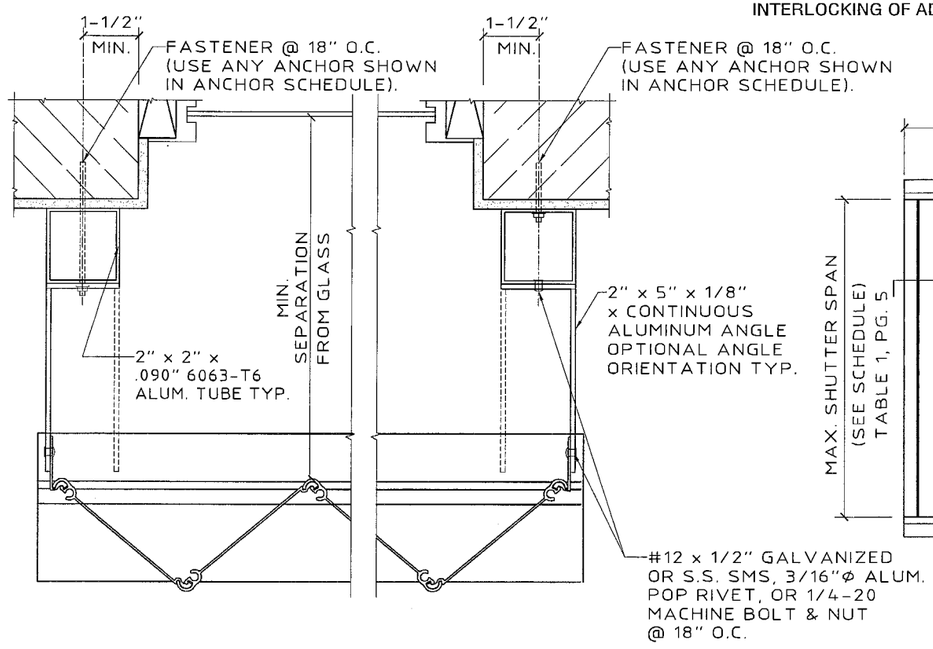

SIDE CLOSURE OPTIONS

SCALE: 3" = 1'-0"

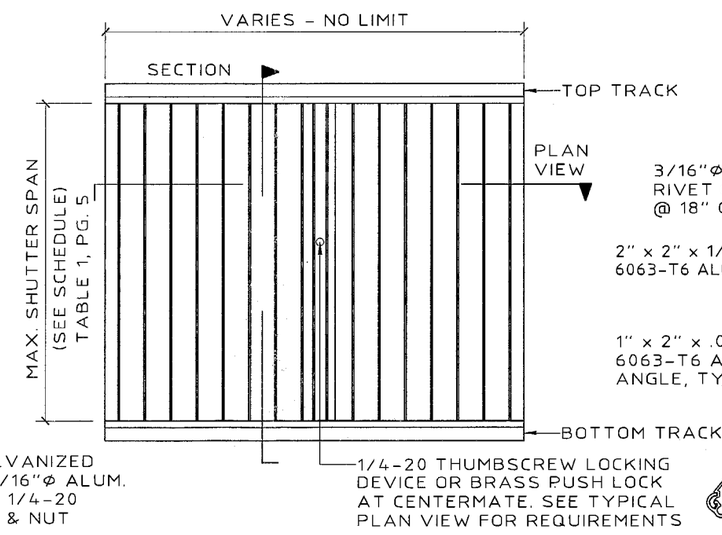

TYPICAL ELEVATION

N.T.S.

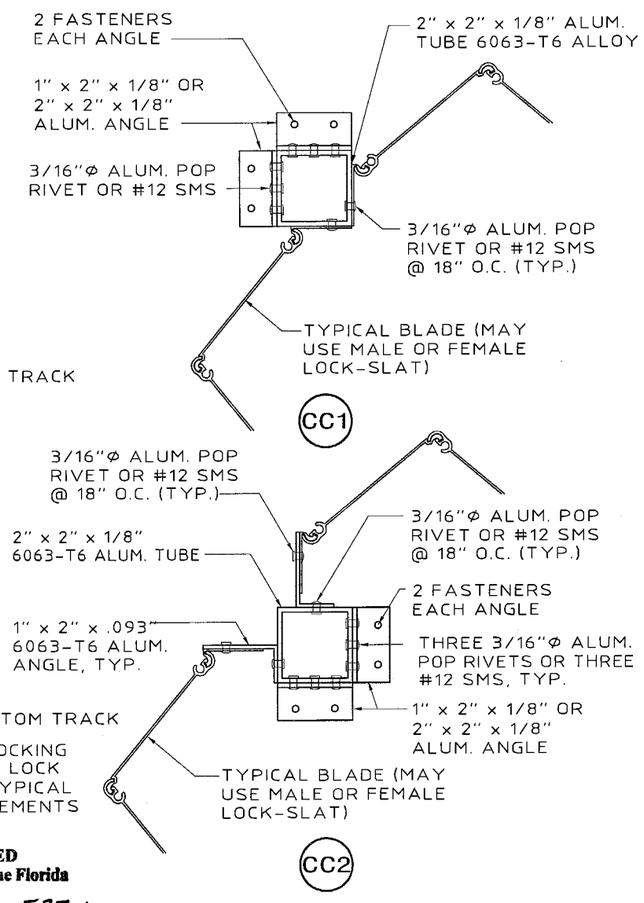

TYPICAL CORNER CLOSURE DETAILS

SCALE: 3" = 1'-0"

PRODUCT REVISED
as complying with the Florida Buiding Code
Acceptance No 03-0527.10
Expiration Date 06/02/2008
By [signature]
Miami Dade Product Control Division

KNEZEVICH & ASSOCIATES, INC.
CONSULTING ENGINEERS • PRODUCT TESTING
1260 N. UNIVERSITY DRIVE, SUITE 180 • FORT LAUDERDALE, FL 33322
TEL: (954) 382-2800 • FAX: (954) 382-2989 • FLORIDA COA #3205
WEBSITE: WWW.KNEZEVICH.COM • E-MAIL: KA@KNEZEVICH.COM

COPYRIGHT © 2003 KNEZEVICH & ASSOCIATES, INC
6.8-HR SYSTEM LICENSED BY SOUTHERN SHUTTER ASSOCIATION

SALES ASSOCIATES
DESIGNER SERIES

SALES ASSOCIATES OF SOUTH FLORIDA
750 SAMPLE ROAD
POMPANO BEACH, FLORIDA 33064
TEL: (954) 943-0774
FAX: (954) 943-0492

V.J. KNEZEVICH
PROFESSIONAL ENGINEER
FL License No: PE 0010983
JUN 18 2003

revisions

no	date	by	description
1	06/19/03	O.B.	PREV. DWG No. 00-916 FBC 2001, GEN. NOTES

SSA I.D.# 0425000982540

date 12/08/1998	
scale AS NOTED	drawn by MCR
design by VJK	checked by VJK

drawing no.
03-904
sheet 2 of 6

Print Information: J:\CADD\Associations\SSA\SalesAssociates\03-904\R1-sub_SpecialCase\03-904-02.dwg AVazquez 06/19/2003 10:41:52am 06/12/03 18:14

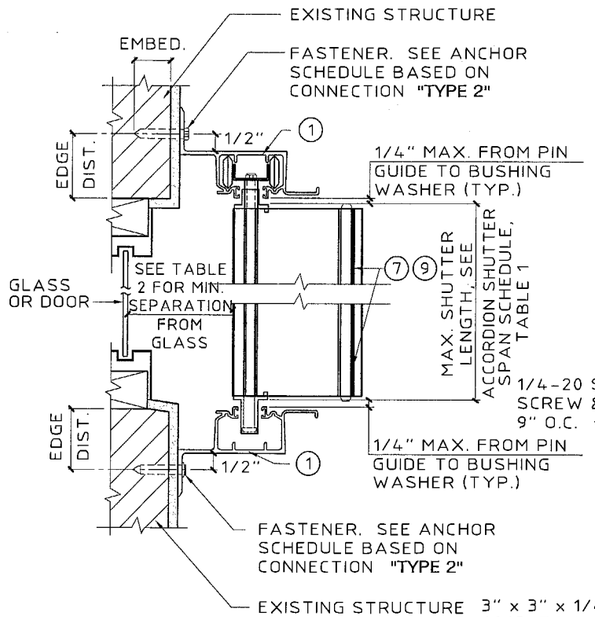

A WALL MOUNT SECTION
SCALE : 3"= 1'- 0"

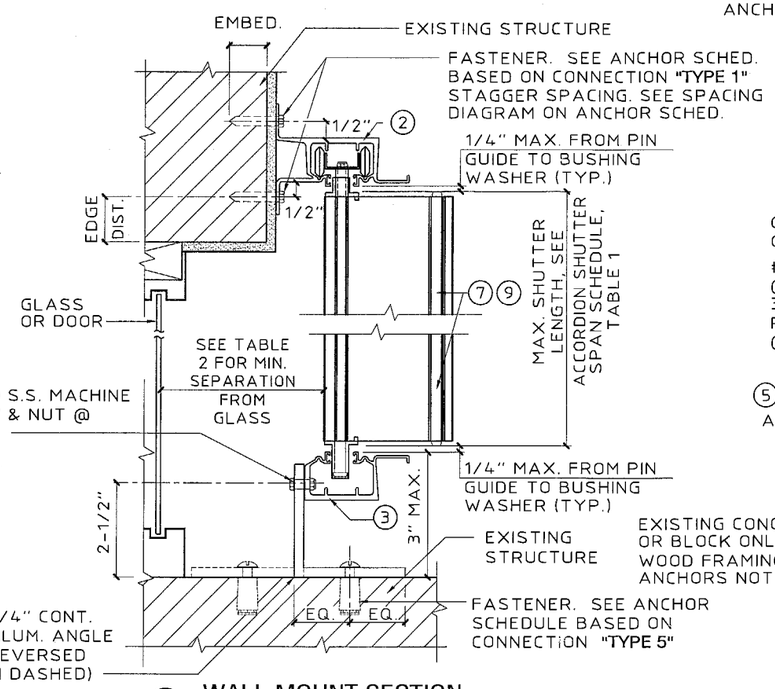

B WALL MOUNT SECTION
SCALE : 3"= 1'- 0"

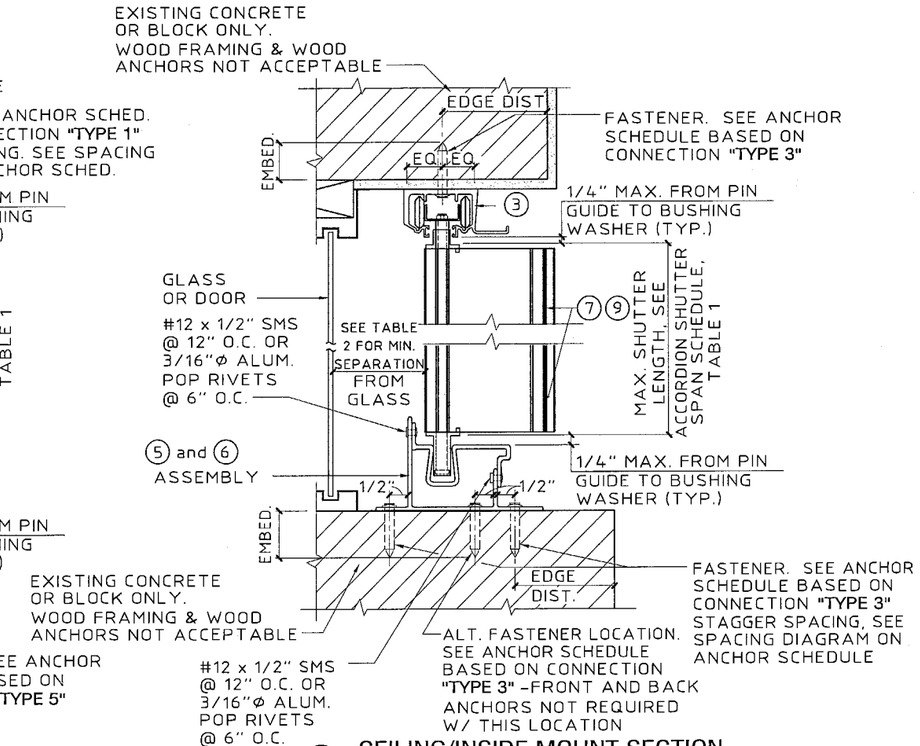

C CEILING/INSIDE MOUNT SECTION
SCALE : 3"= 1'- 0"

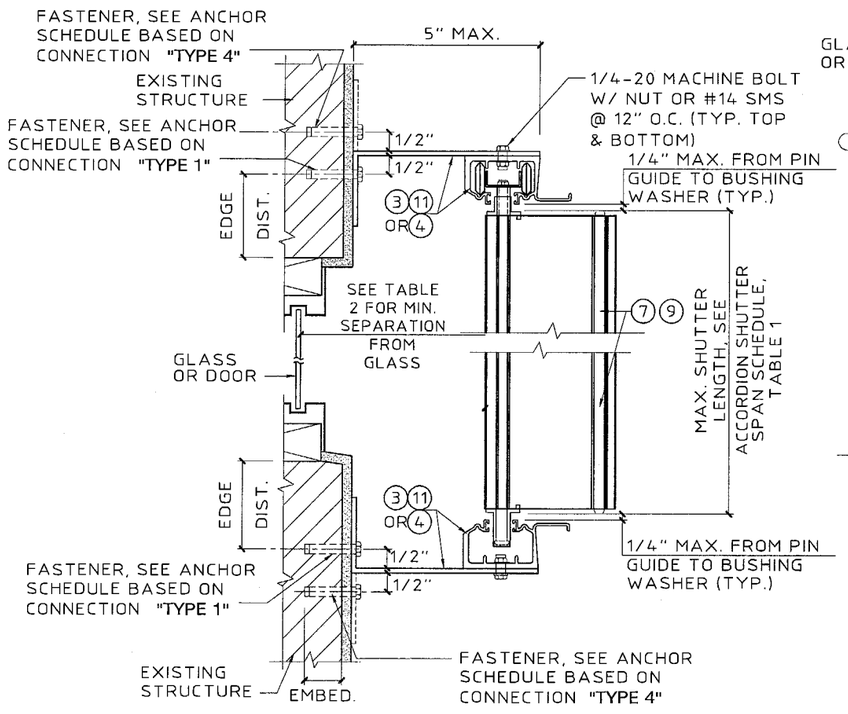

D BUILD OUT MOUNT SECTION
SCALE : 3"= 1'- 0"

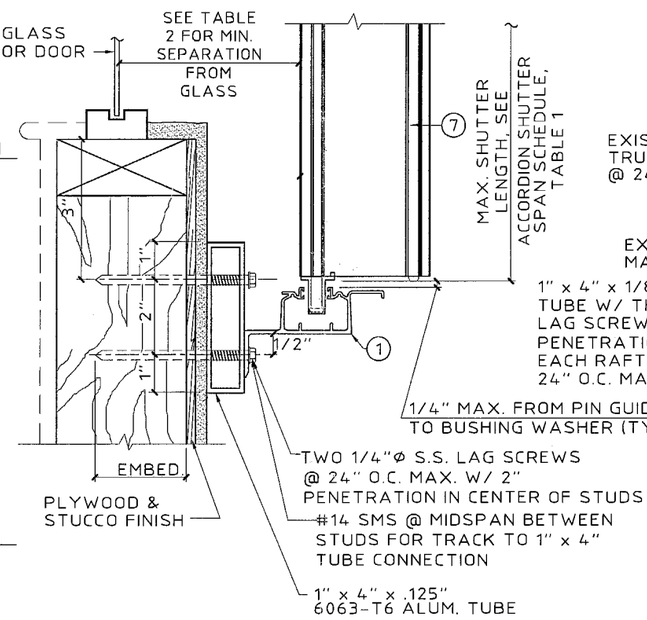

NOTE: THIS DETAIL MAY BE USED AT TOP
MAX. DESIGN LOAD = 72 P.S.F.

E WALL MOUNT SECTION
SCALE : 3"= 1'- 0"

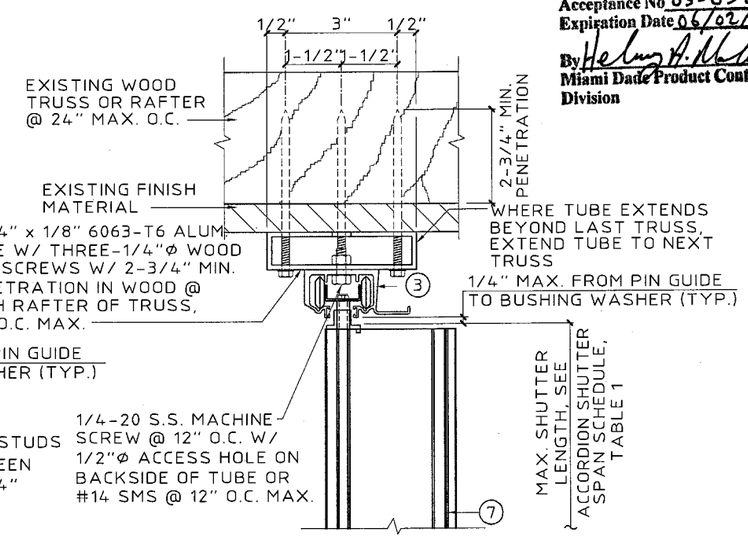

(MAX. DESIGN LOAD ± 72 P.S.F.)

F TRUSS MOUNT SECTION
SCALE : 3"= 1'- 0"

PRODUCT REVISED
as complying with the Florida Buiding Code
Acceptance No. 03-0527.10
Expiration Date 06/02/2008
By Helmy A. Nader
Miami Dade Product Control Division

KNEZEVICH & ASSOCIATES, INC.
CONSULTING ENGINEERS • PRODUCT TESTING
1260 N. UNIVERSITY DRIVE, SUITE 180 • FORT LAUDERDALE, FL 33322
TEL: (954) 382-2800 • FAX: (954) 382-2989 • FLORIDA COA #3205
WEBSITE: WWW.KNEZEVICH.COM • E-MAIL: KA@KNEZEVICH.COM

COPYRIGHT © 2003 KNEZEVICH & ASSOCIATES, INC
6.8-HR SYSTEM LICENSED BY SOUTHERN SHUTTER ASSOCIATION

SALES ASSOCIATES
DESIGNER SERIES

SALES ASSOCIATES OF SOUTH FLORIDA
750 SAMPLE ROAD
POMPANO BEACH, FLORIDA 33064
TEL: (954) 943-0744
FAX: (954) 943-0492

V.J. KNEZEVICH
PROFESSIONAL ENGINEER
FL License No: PE 0010983

JUN 18 2003

revisions			
no	date	by	description
1	06/19/03	OLB	PREV. DWG No. 00-916 FBC 2001, GEN. NOTES

SSA I.D.# 0425009825 4D

date 12/08/1998
scale AS NOTED
drawn by MCR
design by VJK
checked by VJK
drawing no. 03-904
sheet 3 of 6

Print Information: J:\CADD\Associations\SSA\SalesAssociates\03-904\R1-sub_SpecialCase\03-904-03.dwg AVazquez 06/19/2003 10:50:26am 06/12/03 18:14

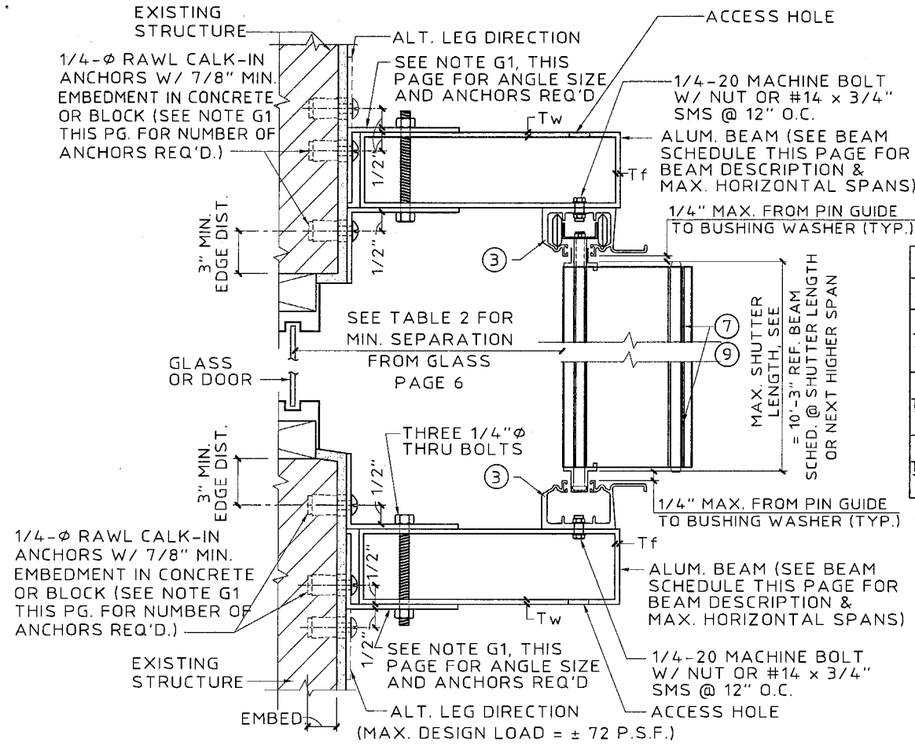

G BUILD-OUT MOUNT SECTION

SCALE : 3"= 1'- 0"

* BEAM SCHEDULE			
DESCRIPTION	SHUTTER SPAN	BOTTOM BEAM	TOP BEAM
2" x 5" Tw = .125" Tf = .125"	5'-0"	9'-5"	9'-0"
	8'-0"	8'-1"	8'-0"
	10'-3"	7'-4"	7'-4"
2" x 7" Tw = .072" Tf = .130"	5'-0"	11'-4"	8'-5"
	8'-0"	9'-8"	7'-6"
	10'-3"	8'-9"	7'-0"
2" x 9" Tw = .072" Tf = .224"	5'-0"	15'-5"	9'-4"
	8'-0"	13'-2"	8'-4"
	10'-3"	11'-11"	7'-9"

*USE BEAM SCHEDULE FOR DETAIL G.

TOP & BOTTOM BEAMS MAY BE USED TOGETHER OR IN COMBINATION W/ OTHER CONNECTION DETAILS. WHERE USED TOGETHER, BEAM MUST BE LIMITED TO TOP BEAM SPANS.

NOTE G1:

2" x 3" x 1/4" 6063-T6 ALUM. ANGLE TOP & BOTTOM. FOR 2" x 5" & 2" x 7" BEAM, USE THREE 1/4"Φ RAWL CALK-IN ANCHORS @ 3" O.C. IN EACH ANGLE AND USE 8" LONG ANGLES FOR 2" x 9" BEAM, USE FOUR 1/4"Φ CALK-IN ANCHORS @ 3" O.C. IN EACH ANGLE AND USE 11" LONG ANGLES

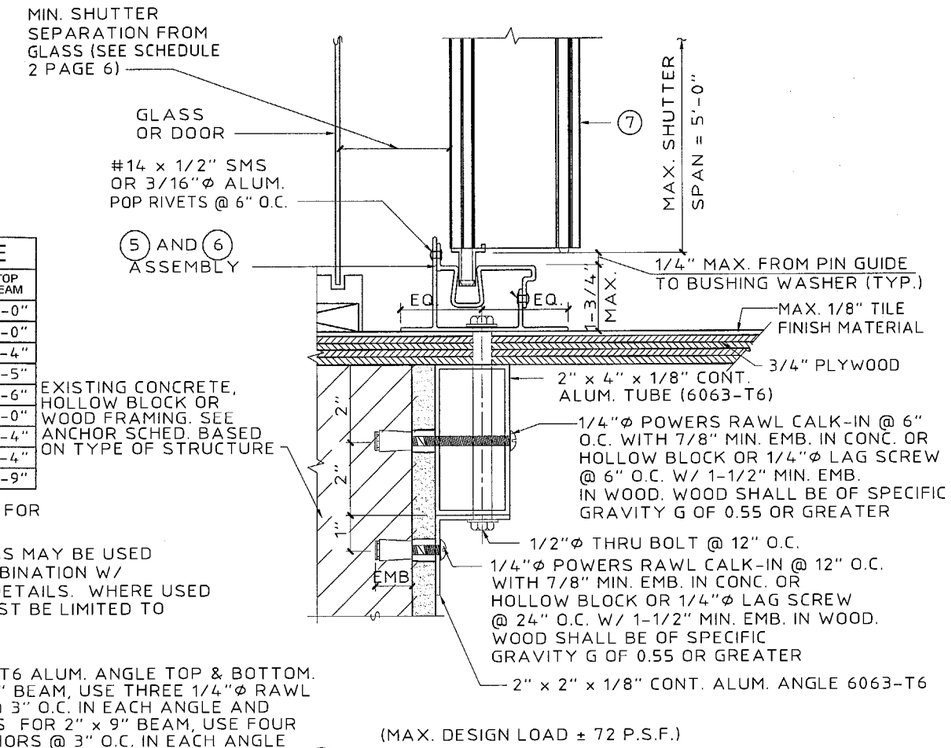

I PASS THRU DETAIL

SCALE : 3"= 1'- 0"

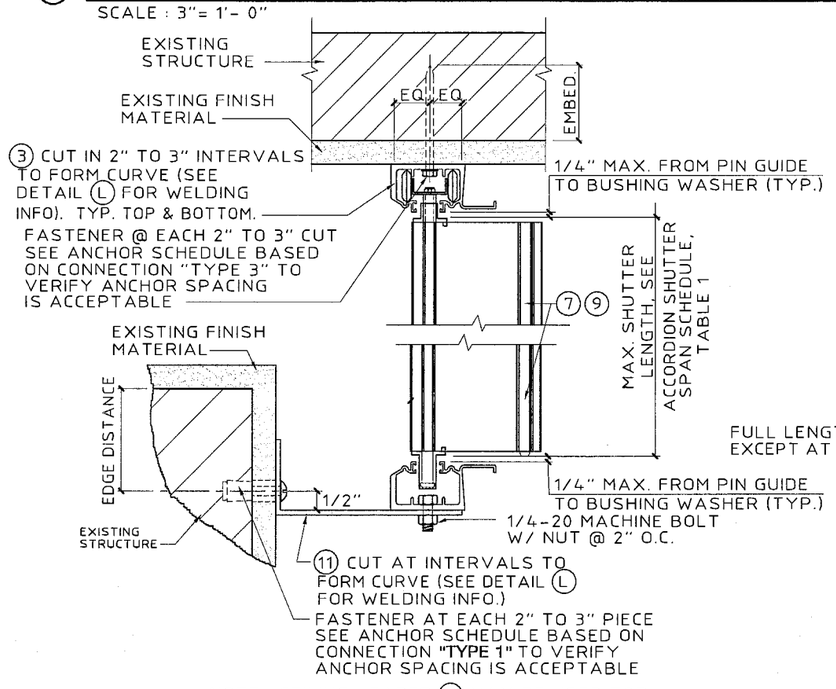

K CURVED TRACK DETAIL

SCALE: 3" = 1'-0"

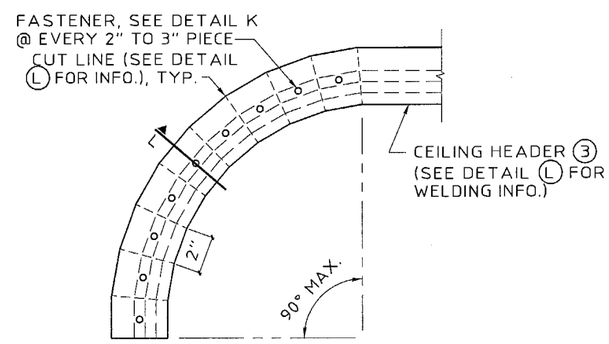

CURVED TRACK PLAN VIEW

N.T.S.

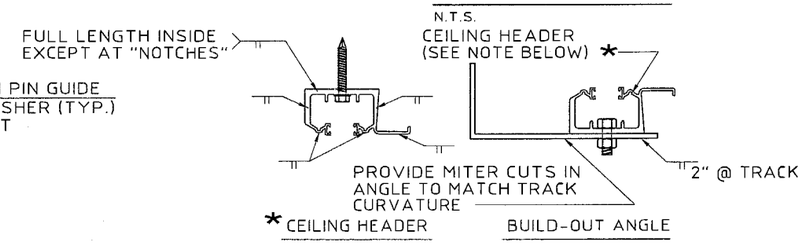

*NOTE: WHEN CEILING HEADER IS USED IN A BOTTOM MOUNTING CONDITION, WELDING LOCATIONS ARE THE SAME.

(USE ER4093 FILLER ALLOY FOR ALL WELDING.)

L WELDING DETAILS

SCALE: 3" = 1'-0"

PRODUCT REVISED
as complying with the Florida Buiding Code
Acceptance No 03-0527.10
Expiration Date 06/02/2008
By Helmy A. Mohr
Miami Dade Product Control Division

KNEZEVICH & ASSOCIATES, INC.
CONSULTING ENGINEERS • PRODUCT TESTING
1260 N. UNIVERSITY DRIVE, SUITE 180 • FORT LAUDERDALE, FL 33322
TEL: (954) 382-2800 • FAX: (954) 382-2989 • FLORIDA COA #3205
WEBSITE: WWW.KNEZEVICH.COM • E-MAIL: KA@KNEZEVICH.COM

COPYRIGHT © 2003 KNEZEVICH & ASSOCIATES, INC.
6.8-HR SYSTEM LICENSED BY SOUTHERN SHUTTER ASSOCIATION

SALES ASSOCIATES DESIGNER SERIES
SALES ASSOCIATES OF SOUTH FLORIDA
750 SAMPLE ROAD
POMPANO BEACH, FLORIDA 33064
TEL: (954) 943-0744
FAX: (954) 943-0492
V.J. KNEZEVICH
PROFESSIONAL ENGINEER
FL License No: PE 0010983

JUN 18 2003

revisions			
no	date	by	description
1	06/19/03	OLB	PREV. DWG No. 00-916 FBC 2001, GEN. NOTES

SSA I.D.# 04250098254D

date 12/08/1998	
scale AS NOTED	drawn by MCR
design by VJK	checked by VJK
drawing no. 03-904	
sheet 4 of 6	

Print Information: J:\CADD\Associations\SSA\SalesAssociates\03-904\R1-sub_SpecialCase\03-904-04.dwg AVazquez 06/19/2003 10:52:45am 06/12/03 18:14

ANCHOR SCHEDULE

FASTENER SPACING (INCHES) REQUIRED FOR VARIOUS DESIGN LOADS AND SPANS

EXISTING STRUCTURE	ANCHOR TYPE	LOAD (W) P.S.F. MAX. (SEE NOTE 1)	MIN. 2" EDGE DISTANCE															MIN. 3" EDGE DISTANCE													
			SPANS UP TO 6' - 0" (SEE NOTE 1)					SPANS UP TO 8' - 8" (SEE NOTE 1)					SPANS UP TO 12' - 10" (SEE NOTE 1)					SPANS UP TO 6' - 0" (SEE NOTE 1)					SPANS UP TO 8' - 8" (SEE NOTE 1)					SPANS UP TO 12' - 10" (SEE NOTE 1)				
			CONNECTION TYPE					CONNECTION TYPE					CONNECTION TYPE					CONNECTION TYPE					CONNECTION TYPE					CONNECTION TYPE				
			1	2	3	4	5	1	2	3	4	5	1	2	3	4	5	1	2	3	4	5	1	2	3	4	5	1	2	3	4	5
CONCRETE	1/4"Ø ITW OR ELCO TAPCON W/ 1-3/4" MIN. EMBEDMENT (MIN. 3,000 P.S.I. CONCRETE)	48.0	12	12	12	12	11	12	12	10	12	7	12	12	6	12	5	12	12	12	12	12	12	12	12	12	9	12	12	8	12	6
		62.0	12	12	11	12	8	12	12	7	12	5	12	8	5	10	4	12	12	12	12	10	12	12	10	12	7	12	9	6	12	4
		72.0	12	12	9	12	7	12	12	6	12	5	11	5	4	7	3	12	12	12	12	9	12	12	8	12	6	12	6	5	8	4
		110.0	12	12	6	12	4	10	5	4	7	3	9	3	3	5		12	12	8	12	5	12	5	5	8	4	10	4	4	6	3
		200.0	9	3	3	5		9	3	3	5		9	3	3	5		10	4	4	6	3	10	4	4	6	3	10	4	4	6	3
	3/8"Ø POWERS RAWL DROP-IN & 3/8"Ø STAINLESS STEEL BOLT WITH 1-9/16" MIN. EMBEDMENT (MIN. 3,000 P.S.I. CONCRETE)	48.0	12	12	12	12	16	12	12	12	12	16	12	12	12	12	12	12	12	12	12	16	12	12	12	12	16	12	12	12	12	16
		62.0	12	12	12	12	16	12	12	12	12	14	12	12	12	12	9	12	12	12	12	16	12	12	12	12	16	12	12	12	12	14
		72.0	12	12	12	12	16	12	12	12	12	12	12	12	10	12	8	12	12	12	12	16	12	12	12	12	16	12	12	12	12	12
		110.0	12	12	12	12	11	12	12	10	12	7	12	9	8	12	6	12	12	12	12	16	12	12	12	12	12	12	12	12	12	10
		200.0	12	9	8	12	6	12	9	8	12	6	12	9	8	12	6	12	12	12	12	10	12	12	12	12	10	12	12	12	12	10
	* 1/4"Ø POWERS FASTENING CALK-IN W/ 7/8" EMBED. & 1/4-20 STAINLESS STEEL MACHINE SCREW (MIN. 3,000 P.S.I. CONCRETE)	48.0	12	12	12	12	12	12	12	10	12	8	12	12	7	12	5	12	12	12	12	12	12	12	12	12	12	12	12	11	12	8
		62.0	12	12	11	12	9	12	12	8	12	6	12	10	5	12	4	12	12	12	12	12	12	12	12	12	9	12	12	9	12	6
		72.0	12	12	10	12	8	12	12	7	12	5	12	7	4	10	3	12	12	12	12	12	12	12	11	12	8	12	8	7	12	5
		110.0	12	12	6	12	5	12	6	4	9	3	12	4	3	7	3	12	12	10	12	8	12	8	7	11	5	12	5	6	8	4
		200.0	12	4	3	7	3	12	4	3	7	3	12	4	3	7	3	12	5	6	8	4	12	5	6	8	4	12	5	6	8	4
	1/4"Ø ELCO CRETE FLEX W/ 1-3/4" MIN. EMBEDMENT (MIN. 3,300 P.S.I. CONCRETE)	48.0	12	12	12	12	12	12	12	12	12	12	12	12	11	12	8	12	12	12	12	12	12	12	12	12	12	12	12	12	12	11
		62.0	12	12	12	12	12	12	12	12	12	9	12	12	9	12	6	12	12	12	12	12	12	12	12	12	12	12	12	11	12	8
		72.0	12	12	12	12	12	12	12	11	12	8	12	8	7	12	5	12	12	12	12	12	12	12	12	12	10	12	10	10	12	7
		110.0	12	12	11	12	8	12	8	7	11	5	12	5	6	8	4	12	12	12	12	10	12	9	10	12	7	12	7	8	10	6
		200.0	12	5	6	8	4	12	5	6	8	4	12	5	6	8	4	12	7	8	10	6	12	7	8	10	6	12	7	8	10	6
HOLLOW CONCRETE BLOCK	1/4"Ø ITW OR ELCO TAPCON W/ 1-1/4" MIN. EMBEDMENT	48.0	12	12	8	12	5	10	10	5	10	3	7	7	3	7		12	12	9	12	6	11	11	6	11	4	7	7	4	7	3
		62.0	11	11	6	11	4	8	8	4	8	3	5	3		4		12	12	7	12	5	9	9	5	9	3	6	3	3	5	
		72.0	10	10	5	10	3	7	7	3	7		4			3		11	11	6	11	4	7	7	4	7	3	5		3	3	
		110.0	6	6	3	6		4			3		3					7	7	4	7		5		3	3		4				
		200.0	3					3					3					4					4					4				
	* 1/4"Ø POWERS FASTENING CALK-IN W/ 7/8" EMBED. & 1/4-20 STAINLESS STEEL MACHINE SCREW	48.0	12	12	8	12	6	12	12	6	12	4	9	9	4	9	3	12	12	12	12	9	12	12	9	12	6	11	11	6	11	4
		62.0	12	12	6	12	5	10	10	4	10	3	7	4	3	5		12	12	10	12	7	12	12	7	12	5	8	5	4	7	3
		72.0	12	12	5	12	4	9	9	4	9		6			4		12	12	9	12	6	11	11	6	11	4	7	3	4	5	
		110.0	8	8	3	8		5			3		5					10	10	5	10	4	7	3	4	4		6		3	3	
		200.0	5					5					5					6		3	3		6		3	3		6		3	3	
	1/4"Ø ELCO CRETE FLEX W/ 1-1/4" MIN. EMBEDMENT	48.0	12	12	12	12	11	12	12	11	12	7	12	12	7	12	5	12	12	12	12	11	12	12	11	12	8	12	12	7	12	5
		62.0	12	12	12	12	8	12	12	8	12	6	11	7	5	9	4	12	12	12	12	9	12	12	8	12	6	12	7	5	10	4
		72.0	12	12	10	12	7	12	12	7	12	5	9	4	4	6	3	12	12	10	12	7	12	12	7	12	5	10	5	5	7	3
		110.0	12	12	6	12	4	9	4	4	6	3	8	3	4	4		12	12	7	12	5	10	4	4	6	3	8	3	4	5	3
		200.0	8	3	4	4		8	3	4	4		8	3	4	4		8	3	4	5	3	8	3	4	5	3	8	3	4	5	3

ANCHOR SCHEDULE

FASTENER SPACING (INCHES) REQUIRED FOR VARIOUS DESIGN LOADS AND SPANS

EXISTING STRUCTURE	ANCHOR TYPE	LOAD (W) P.S.F. MAX. (SEE NOTE 1)	MIN. 3/4" EDGE DISTANCE														
			SPANS UP TO 6' - 0" (SEE NOTE 1)					SPANS UP TO 8' - 8" (SEE NOTE 1)					SPANS UP TO 12' - 10" (SEE NOTE 1)				
			CONNECTION TYPE					CONNECTION TYPE					CONNECTION TYPE				
			1	2	3	4	5	1	2	3	4	5	1	2	3	4	5
WOOD	1/4"Ø WOOD LAG W/ 1-3/4" MIN. THREAD EMBED. SHEAR PARALLEL OR PERPENDICULAR TO WOOD GRAIN	48.0	12	12	10	12	8	12	12	7	12	6	12	12	4	12	4
		62.0	12	12	8	12	6	12	12	5	12	4	12	10	3	12	3
		72.0	12	12	7	12	5	12	12	4	12	4	12	6	3	9	
		110.0	12	12	4	12	3	12	6	3	9		11	4		7	
		200.0	11	4		7		11	4		7		11	4		7	
	* 7/16"Ø WOOD BUSHING W/ 7/8" MIN. EMBEDMENT STAINLESS STEEL STEEL MACHINE SCREW	48.0	12	12		12		12	12		12		10	10		10	
		62.0	12	12		12		12	12		12		8	5		6	
		72.0	12	12		12		10	10		10		7	3		4	
		110.0	9	9		9		6	3		4		5			3	
		200.0	5			3		5			3		5			3	

ANCHOR NOTES:

1. SPANS & LOADS SHOWN HERE ARE FOR DETERMINING ANCHOR SPACING ONLY. ALLOWABLE SHUTTER SPANS FOR SPECIFIC LOADS MUST BE LIMITED TO THOSE SHOWN IN TABLE 1.
2. ENTER TABLE BASED ON THE EXISTING STRUCTURE MATERIAL, ANCHOR TYPE AND EDGE DISTANCE. SELECT DESIGN LOAD GREATER THAN OR EQUAL TO NEGATIVE DESIGN LOAD ON SHUTTER AND SELECT SPAN GREATER THAN OR EQUAL TO SHUTTER SPAN.
3. EXISTING STRUCTURE MAY BE CONCRETE, HOLLOW BLOCK OR WOOD FRAMING. REFERENCE ANCHOR SCHEDULE FOR PROPER ANCHOR TYPE BASED ON TYPE OF EXISTING STRUCTURE AND APPROPRIATE CONNECTION TYPE. SEE CONNECTION DETAILS FOR IDENTIFICATION OF CONNECTION TYPE.
4. ANCHORS SHALL BE INSTALLED IN ACCORDANCE WITH MANUFACTURERS' RECOMMENDATIONS.
5. MINIMUM EMBEDMENT AND EDGE DISTANCE EXCLUDES WALL FINISH OR STUCCO.
6. WHERE EXISTING STRUCTURE IS WOOD FRAMING, WOOD FRAMING CONDITIONS VARY. FIELD VERIFY THAT FASTENERS ARE INTO ADEQUATE WOOD FRAMING MEMBERS, NOT PLYWOOD. FASTENING TO PLYWOOD IS ACCEPTABLE ONLY FOR SIDE CLOSURE PIECES.
7. WHERE LAG SCREWS FASTEN TO NARROW FACE OF STUD FRAMING, FASTENER SHALL BE LOCATED IN CENTER OF NOMINAL 2"x4" (MIN.) WOOD STUD. 3/4" EDGE DISTANCE IS ACCEPTABLE FOR WOOD FRAMING. WOOD STUD SHALL BE "SOUTHERN PINE" G=0.55 OR GREATER DENSITY. LAG SCREWS SHALL HAVE PHILLIPS PAN HEAD OR HEX HEAD.
8. MACHINE SCREWS SHALL HAVE MINIMUM OF 1/2" ENGAGEMENT OF THREADS IN BASE ANCHOR AND MAY HAVE EITHER A PAN HEAD, TRUSS HEAD, OR WAFER HEAD (SIDEWALK BOLT), U.O.N.
9. DESIGNATES ANCHOR CONDITIONS WHICH ARE NOT ACCEPTABLE USES.
10. * DESIGNATES ANCHOR CONDITIONS WHICH ARE REMOVABLE BY REMOVING MACHINE SCREW, NUT OR WASHERED WINGNUT.

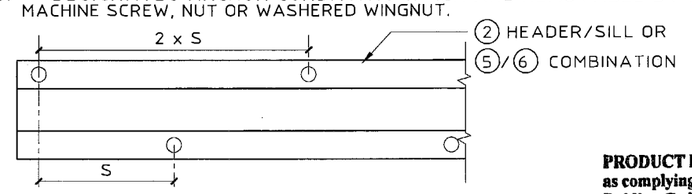

NOTE: "S" INDICATES ANCHOR SCHEDULE SPACING.

SPACING DIAGRAM FOR CONNECTION TYPE 1 W/ PIECE ② AND TYPE 3 W/ OUTSIDE ANCHORS ON PIECE ⑥

SCALE: 3" = 1'-0"

PRODUCT REVISED
as complying with the Florida Buiding Code
Acceptance No 03-0527.10
Expiration Date 06/02/2008
By Helena A. Maier
Miami Dade Product Control Division

KNEZEVICH & ASSOCIATES, INC.
CONSULTING ENGINEERS • PRODUCT TESTING
1260 N. UNIVERSITY DRIVE, SUITE 180 • FORT LAUDERDALE, FL 33322
TEL: (954) 382-2800 • FAX: (954) 382-2989 • FLORIDA COA #3205
WEBSITE: WWW.KNEZEVICH.COM • E-MAIL: KA@KNEZEVICH.COM

COPYRIGHT © 2003 KNEZEVICH & ASSOCIATES, INC.

6.8-HR SYSTEM LICENSED BY SOUTHERN SHUTTER ASSOCIATION

SALES ASSOCIATES DESIGNER SERIES
SALES ASSOCIATES OF SOUTH FLORIDA
750 SAMPLE ROAD
POMPANO BEACH, FLORIDA 33064
TEL: (954) 943-0744
FAX: (954) 943-0492

V.J. KNEZEVICH
PROFESSIONAL ENGINEER
FL License No. PE 0010983
JUN 18 2003

revisions			
no	date	by	description
1	06/19/03	DLB	PREV. DWG No. 00-916 FBC 2001, GEN. NOTES

SSA I.D.# 04250098254D

date 12/08/1998	
scale AS NOTED	drawn by MCR
design by VJK	checked by VJK
drawing no. 03-904	
sheet 5 of 6	

Print Information: J:\CADD\Associations\SSA\SalesAssociates\03-904\R1-sub_SpecialCase\03-904-05.dwg AVazquez 06/19/2003 11:00:13am 06/12/03 18:14

TABLE 2

MINIMUM SEPARATION FROM GLASS

POSITIVE DESIGN LOAD (W) (P.S.F.)	ACTUAL SHUTTER SPAN (L) (FT. - IN)	MIN. SEPARATION FROM GLASS FOR INSTALLATIONS LESS THAN OR EQUAL TO 30' ABOVE GRADE (IN.)	MIN. SEPARATION FROM GLASS FOR INSTALLATIONS GREATER THAN 30' ABOVE GRADE (IN.)
40.0	8'-3"	3-1/8	1-5/8
	10'-0"	3-3/4	2-1/8
	11'-11"	3-3/4	3
50.0	8'-3"	3-1/8	1-3/4
	10'-0"	3-3/4	2-3/8
	11'-4"	3-3/4	3
60.0	5'-0"	3-1/8	1-1/4
	8'-3"	3-1/8	1-7/8
	10'-9"	3-3/4	3
70.0	5'-0"	3-1/8	1-1/8
	8'-3"	3-1/8	1-7/8
	10'-5"	3-3/4	3
80.0	6'-0"	3-1/8	1-3/8
	8'-3"	3-1/8	2-1/8
	9'-4"	3-3/4	2-5/8
90.0	5'-0"	3-1/8	1-3/8
	7'-0"	3-1/8	1-5/8
	8'-3"	3-1/8	2-1/8
100.0	5'-0"	3-1/8	1-3/8
	7'-0"	3-1/8	1-3/4
	8'-3"	3-1/8	2-1/4
110.0	5'-0"	3-1/8	1-3/8
	7'-0"	3-1/8	1-7/8
	8'-3"	3-1/8	2-3/8
120.0	5'-0"	3-1/8	1-3/8
	7'-0"	3-1/8	1-7/8
	8'-3"	3-1/8	2-1/4
130.0	5'-0"	3-1/8	1-3/8
	7'-0"	3-1/8	1-7/8
	8'-3"	3-1/8	2-1/2

TABLE 1 NOTES:

1. ENTER TABLE 1 WITH NEGATIVE DESIGN LOAD TO DETERMINE MAXIMUM SHUTTER SPAN. POSITIVE LOADS LESS THAN OR EQUAL TO THE NEGATIVE LOAD ARE ACCEPTABLE.
2. FOR DESIGN LOADS BETWEEN TABULATED VALUES, USE NEXT HIGHER LOAD OR LINEAR INTERPOLATION MAY BE USED TO DETERMINE ALLOWABLE SPANS.

TABLE 1

ACCORDION SHUTTER SPAN SCHEDULE

NEGATIVE DESIGN LOAD W (P.S.F.)	FOR ALL MOUNTING CONDITIONS L max. (FT-IN)
30.0	12-10
35.0	12-4
40.0	11-11
45.0	11-7
50.0	11-3
55.0	11-0
60.0	10-9
65.0	10-6
70.0	10-4
72.0	10-3
75.0	10-2
80.0	9-11
90.0	9-7
100.0	9-3
110.0	9-0
120.0	8-8
130.0	8-4
133.0	8-3
140.0	7-11
150.0	7-5
160.0	6-11
170.0	6-6
180.0	6-2
190.0	5-10
200.0	5-6

PRODUCT REVISED
as complying with the Florida Buiding Code
Acceptance No 03-0527.10
Expiration Date 06/02/2008
By [signature]
Miami Dade Product Control Division

KNEZEVICH & ASSOCIATES, INC.
CONSULTING ENGINEERS • PRODUCT TESTING
1260 N. UNIVERSITY DRIVE, SUITE 180 • FORT LAUDERDALE, FL 33322
TEL: (954) 382-2800 • FAX: (954) 382-2989 • FLORIDA COA #3205
WEBSITE: WWW.KNEZEVICH.COM • E-MAIL: KA@KNEZEVICH.COM

COPYRIGHT © 2003 KNEZEVICH & ASSOCIATES, INC.

6.8-HR SYSTEM LICENSED BY SOUTHERN SHUTTER ASSOCIATION

SALES ASSOCIATES
DESIGNER SERIES

SALES ASSOCIATES OF SOUTH FLORIDA
750 SAMPLE ROAD
POMPANO BEACH, FLORIDA 33064
TEL: (954) 943-0744
FAX: (954) 943-0492

V.J. KNEZEVICH
PROFESSIONAL ENGINEER
FL License No. PE0010983

JUN 1 8 2003

revisions

no	date	by	description
1	06/19/03	OLB	PREV. DWG No. 00-916 FBC 2001, GEN. NOTES

SSA I.D.# 0425000982540

date 12/08/1998
scale AS NOTED
drawn by MCR
design by VJK
checked by VJK
drawing no. 03-904
sheet 6 of 6

Print Information: J:\CADD\Associations\SSA\SalesAssociates\03-904\R1-sub_SpecialCase\03-904-06.dwg AVazquez 06/19/2003 11:01:50am 06/12/03 18:14