MIAMI-DADE

BUILDING CODE COMPLIANCE OFFICE (BCCO)
PRODUCT CONTROL DIVISION

MIAMI-DADE COUNTY, FLORIDA
METRO-DADE FLAGLER BUILDING
140 WEST FLAGLER STREET, SUITE 1603
MIAMI, FLORIDA 33130-1563
(305) 375-2901 FAX (305) 375-2908

NOTICE OF ACCEPTANCE (NOA)

Rolladen, Inc.
550 Ansin Boulevard
Hallandale, Florida 33009

SCOPE:
This NOA is being issued under the applicable rules and regulations governing the use of construction materials. The documentation submitted has been reviewed by Miami-Dade County Product Control Division and accepted by the Board of Rules and Appeals (BORA) to be used in Miami Dade County and other areas where allowed by the Authority Having Jurisdiction (AHJ).

This NOA shall not be valid after the expiration date stated below. The Miami-Dade County Product Control Division (In Miami Dade County) and/or the AHJ (in areas other than Miami Dade County) reserve the right to have this product or material tested for quality assurance purposes. If this product or material fails to perform in the accepted manner, the manufacturer will incur the expense of such testing and the AHJ may immediately revoke, modify, or suspend the use of such product or material within their jurisdiction. BORA reserves the right to revoke this acceptance, if it is determined by Miami-Dade County Product Control Division that this product or material fails to meet the requirements of the applicable building code.

This product is approved as described herein, and has been designed to comply with the High Velocity Hurricane Zone of the Florida Building Code.

DESCRIPTION: Aluminum Accordion Shutter

APPROVAL DOCUMENT: Drawing No. 94-83, titled " Accordion Shutter Details ", sheets 1 through 4 of 4, prepared by Al-Farooq Corporation, dated October 25, 1994, last revision #C dated October 23, 2003, signed and sealed by Humayoun Farooq, P.E. bearing the Miami-Dade County Product Control Revision stamp with the Notice of Acceptance number and expiration date by the Miami-Dade County Product Control Division.

MISSILE IMPACT RATING: Large and Small Missile Impact

LABELING: Each unit shall bear a permanent label with the manufacturer's name or logo, city, state and the following statement: "Miami-Dade County Product Control Approved", unless otherwise noted herein.

RENEWAL of this NOA shall be considered after a renewal application has been filed and there has been no change in the applicable building code negatively affecting the performance of this product.

TERMINATION of this NOA will occur after the expiration date or if there has been a revision or change in the materials, use, and/or manufacture of the product or process. Misuse of this NOA as an endorsement of any product, for sales, advertising or any other purposes shall automatically terminate this NOA. Failure to comply with any section of this NOA shall be cause for termination and removal of NOA.

ADVERTISEMENT: The NOA number preceded by the words Miami-Dade County, Florida, and followed by the expiration date may be displayed in advertising literature. If any portion of the NOA is displayed, then it shall be done in its entirety.

INSPECTION: A copy of this entire NOA shall be provided to the user by the manufacturer or its distributors and shall be available for inspection at the job site at the request of the Building Official.

This NOA **revises & renews NOA # 00-0609.06** and consists of this page 1, evidence submitted page(s) as well as approval document mentioned above.

The submitted documentation was reviewed by **Helmy A. Makar, P.E.**

PRODUCT CONTROL ACCEPTED

Helmy A. Makar
11/20/03

NOA No 03-0604.03
Expiration Date: 09/25/2008
Approval Date: 11/20/2003
Page 1

Rolladen, Inc.

NOTICE OF ACCEPTANCE: EVIDENCE SUBMITTED

1. EVIDENCE SUBMITTED UNDER PREVIOUS APPROVAL #97-0721.03

A. DRAWINGS

1. *Drawing No. 94-83, Rolladen, Inc., "Accordion Shutter Details", Sheets 1 through 4 of 4, prepared Al-Farooq Corporation, dated October 25, 1994, Revision A dated January 26, 1995, signed and sealed by Humayoun Farooq, P.E.*

B. TESTS

1. *Test report on Large Missile Impact Test and Cyclic Wind Pressure Test of "A.C.C.A."*
   accordion shutter (95" Span), prepared by Hurricane Engineering & Testing, Inc., Report No. HETI-94-210, dated July 25, 1994, signed and sealed by Hector M. Medina, P.E.
2. *Test report on Large Missile Impact Test of "Accordion Shutter" (147.25" Span), prepared by Hurricane Engineering & Testing, Inc., Report No. HETI-94-331i, dated October 11, 1994, signed and sealed by Hector M. Medina, P.E.*
3. *Test report on Large Missile Impact & Cyclic Wind Pressure Test of "Accordion Shutter" (98" Span), prepared by Hurricane Engineering & Testing Inc., Report No. HETI-94-351, dated October 24, 1994, signed and sealed by Hector M. Medina, P.E.*
4. *Test report on Uniform Static Air Pressure Test of "A.C.C.A." Accordion Shutter (98" Span), prepared by Hurricane Engineering & Testing, Inc., Report No. HETI-94-200, dated July 19, 1994, signed and sealed by Arshad Viqar, P.E.*
5. *Test report on Uniform Static Air Pressure Test of "Accordion Shutter" (147.25" Span), prepared by Hurricane Engineering & Testing, Inc., Report No. HETI-94-331, dated October 11, 1994, signed and sealed by Hector M. Medina, P.E.*
6. *Test report on Uniform Static Air Pressure Test of "Accordion Shutter" (96" Span), prepared by Hurricane Engineering Inc., Report No. HETI-94-332, dated October 12, 1994, signed and sealed by Hector M. Medina, P.E.*
7. *Test report on Uniform Static Air Pressure Test of "Accordion Shutter" (120" Span), prepared by Hurricane Engineering & Testing Inc., Report No. HETI-94-334, dated October 13, 1994, signed & sealed by Hector Medina, P.E.*
8. *Test report on Uniform Static Air Pressure Test of "Accordion Shutter" (104" Span), prepared by Hurricane Engineering & Testing Inc., Report No. HETI-94-342, dated October 19, 1994, signed and sealed by Hector M. Medina, P.E.*

C. CALCULATIONS

1. *Anchor analysis dated November 10, 1994, Sheets A-1 through A-25, prepared by Al-Farooq Corporation, signed and sealed by Humayoun Farooq, P.E.*

Helmy A. Makar

Helmy A. Makar, P. E.
Product Control Examiner
NOA No 03-0604.03
Expiration Date: 09/25/2008
Approval Date: 11/20/2003

NOTICE OF ACCEPTANCE: EVIDENCE SUBMITTED

D. MATERIAL CERTIFICATIONS

1. *Mill Certified Inspection No. 4541, issued by the William L. Bonnell Co., Inc. dated July 18, 1994 with chemical composition and mechanical properties of aluminum alloy extruded part No. Q18735-01.*
2. *Certified Tensile Test Report from independent lab Hurricane Engineering & Testing Inc., Report No. HETI-94-T14, dated August 16, 1994 for aluminum accordion sample.*

2. EVIDENCE SUBMITTED UNDER PREVIOUS APPROVAL # 00-0609.06

A. DRAWINGS

1. *None.*

B. TESTS

1. *See original approved file #97-0721.03.*

C. CALCULATIONS

1. *See original approved file #97-0721.03.*

D. MATERIAL CERTIFICATIONS

1. *See original approved file #97-0721.03.*

E. STATEMENTS

1. *Letter by Al-Farooq Corporation, dated March 9, 2000, signed and sealed by Humayoun Farooq, P.E., certifying that he is still in the engineering business.*
2. *Letter by Rolladen, Inc., dated May 22, 2000, signed by Terry D. Low, certifying that no changes or alterations have been made to the Product Approval #94-1201.06.*

3. NEW EVIDENCE SUBMITTED

A. DRAWINGS:

1. *Drawing No. 94-83, titled " Accordion Shutter Details ", sheets 1 through 4 of 4, prepared by Al-Farooq Corporation, dated October 25, 1994, last revision #C dated October 23, 2003, signed and sealed by Humayoun Farooq, P.E.*

B. TESTS:

1. *None.*

Helmy A. Makar

Helmy A. Makar, P. E.
Product Control Examiner
NOA No 03-0604.03
Expiration Date: 09/25/2008
Approval Date: 11/20/2003

Rolladen, Inc.

NOTICE OF ACCEPTANCE: EVIDENCE SUBMITTED

C. CALCULATIONS:

1. *Anchor analysis, 41 pages, dated April 28, 2003, prepared by Al-Farooq Corp., signed and sealed by Humayoun Farooq, P.E.*

D. QUALITY ASSURANCE

1. *By Miami-Dade County Building Code Compliance Office.*

E. MATERIAL CERTIFICATION:

1. *None.*

Helmy A. Makar, P. E.
Product Control Examiner
NOA No 03-0604.03
Expiration Date: 09/25/2008
Approval Date: 11/20/2003

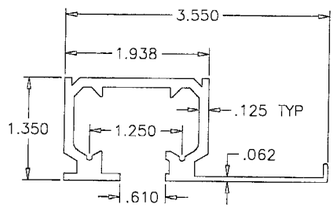

INSIDE MOUNT HEADER & SILL
6063–T6
RON–90

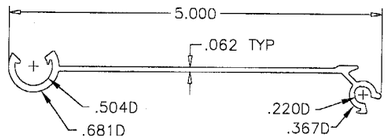

BLADE
6063–T6

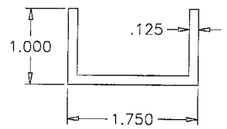

FLOOR SHOE
6063–T6
RON–1058

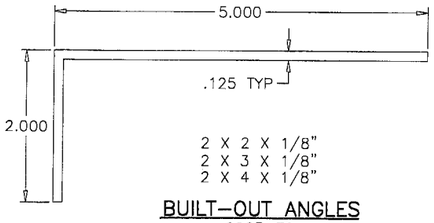

BUILT–OUT ANGLES
6063–T6

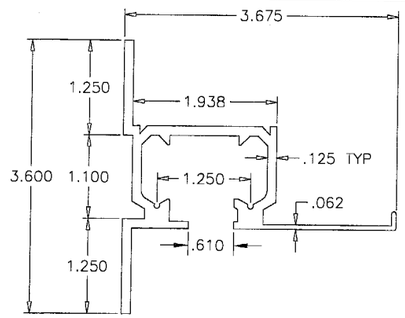

WALL MOUNT HEADER & SILL
6063–T6
RON–91

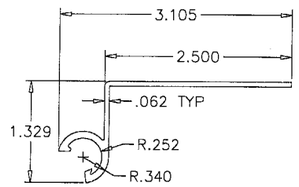

90° END SLAT
6063–T6
RON–93

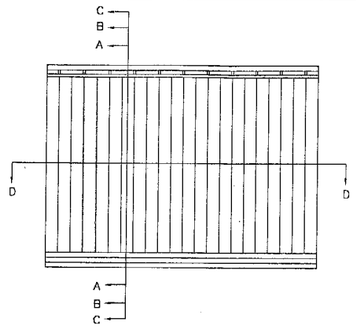

TYPICAL ELEVATION

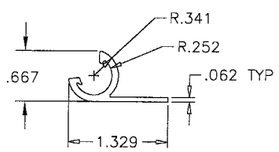

FLAT END SLAT
6063–T6
RON–94

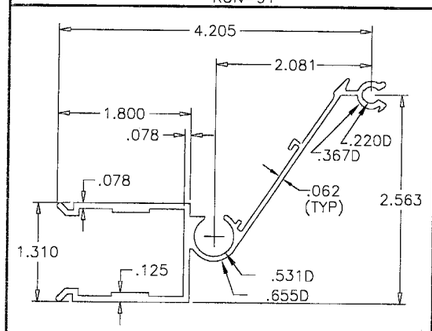

FEMALE LOCKING SLAT
6063–T6
RON–95

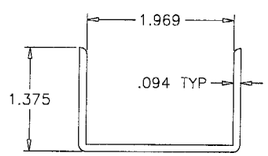

BOTTOM TRACK ADAPTER
6063–T6
RON–97

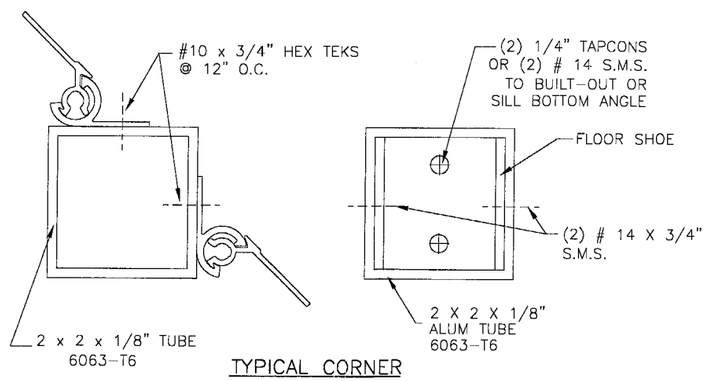

TYPICAL CORNER DETAILS

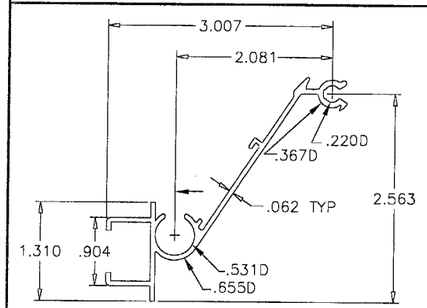

MALE LOCKING SLAT
6063–T6
RON–96

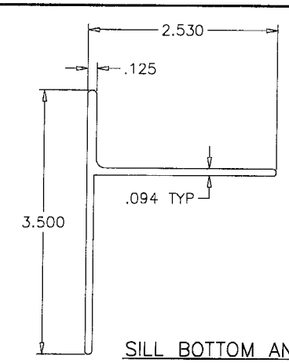

SILL BOTTOM ANGLE
6063–T6
RON–89

PRODUCT MARKING

A LABEL SHALL BE AFFIXED ON LOCKING MEMBER OF UNIT ABOVE THE LOCK WITH THE FOLLOWING STATEMENT.

ROLLADEN INC. HALLANDALE, FL.
A.C.C.A. ACCORDION SHUTTER
"DADE COUNTY PRODUCT CONTROL APPROVED"

THIS PRODUCT PASSED LARGE MISSILE IMPACT TEST AND WAS CYCLED TO
DESIGN PRESSURE RATING = + 112 PSF,
– 217 PSF,

FOR INSTALLATION DETAILS SEE SHEET 2 & 3.

ANCHORS: EMBEDMENT & EDGE DISTANCES SHOWN ARE BEYOND THE WALL & FLOOR COVERING (STUCCO, TILES, ETC.)

GENERAL NOTES

1. THIS PRODUCT IS DESIGNED TO COMPLY WITH THE HIGH VELOCITY HURRICANE ZONE OF THE 2001 FLORIDA BUILDING CODE.
2. DESIGN CRITERIA FOR ALUMINUM, MINIMUM MECHANICAL PROPERTIES, AND SAFETY FACTORS ARE IN ACCORDANCE WITH THE "ALUMINUM CONSTRUCTION MANUAL" LATEST EDITION.
3. ALUMINUM ALLOYS: ALL EXTRUSIONS SHALL BE ALLOY 6063–T6, OR AS NOTED.
4. STEEL SURFACES TO BE PLACED IN CONTACT WITH ALUMINUM SHALL BE GIVEN ONE COAT OF ZINC CHROMATE PRIMER IN ACCORDANCE WITH FEDERAL SPEC. NO. TTP–645, OR BE GALVANIZED.
5. ANCHORS SHALL BE AS LISTED, SPACED AS SHOWN ON DETAILS. ANCHOR EMBEDMENT TO BASE MATERIAL SHALL BE BEYOND WALL DRESSING OR STUCCO.
6. ALL BOLTS, NUTS AND WASHERS SHALL BE STAINLESS STEEL OR ALUMINUM ALLOY 2024–T4 OR 7075–T6, OR PLATED STEEL.
7. DESIGN CRITERIA FOR SLATS: MAX DEFLECTION ≤ L/30 FOR NEGATIVE LOAD AND THE LESSER OF L/30 OR 2" FOR POSITIVE LOAD.
8. ANCHORING OR LOADING CONDITIONS OTHER THAN THOSE SHOWN IN THESE DETAILS ARE NOT PART OF THIS APPROVAL.
9. A 33% INCREASE IN ALLOWABLE STRESS WAS USED IN DESIGN OF ANCHOR SPACING.

DESIGN LOADS SHALL BE CALCULATED AS PER REQUIREMENTS OF ASCE 7–98.

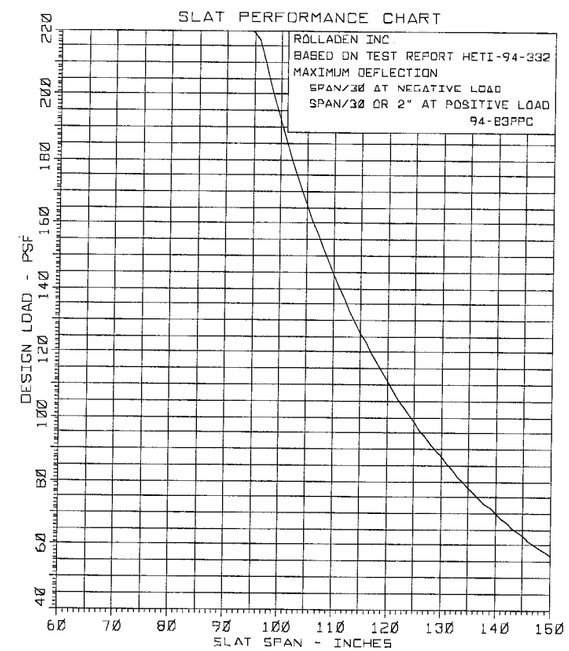

USE SLAT PERFORMANCE CHART TO VERIFY SLAT CAPACITY FOR THE REQUIRED DESIGN LOAD FOR THE PARTICULAR LOCATION.

Engr: DR. HUMAYOUN FAROOQ
STRUCTURES
FLA. PE # 16557
C.A.N. 3538

OCT 2 4 2003

PRODUCT REVISED
as complying with the Florida Buiding Code
Acceptance No 03-0604.03
Expiration Date 09/25/2008
By [signature]
Miami Dade Product Control Division

AL-FAROOQ CORPORATION
ENGINEERS, PLANNERS & PRODUCT DESIGN
1235 SW 87 AVE
MIAMI, FLORIDA 33174
(305) 264-8100

ACCORDION\94-83RNI

ACCORDION SHUTTER DETAILS

ROLLADEN INC.
550 ANSIN BOULEVARD
HALLANDALE, FL. 33009
(305) 757 – 8591

revisions:

no	date	by	description
A	1.26.95	H	SHEET 2 REVISED
B	05.23.03		UPDATED FOR FBC & NDS 97
C	10.23.03		REV. PER BCCO COMMENTS

date: 10–25–94
scale: 1/2" = 1"
dr. by: HAMID
chk. by:

drawing no.
94–83

CEILING & FLOOR MOUNTS

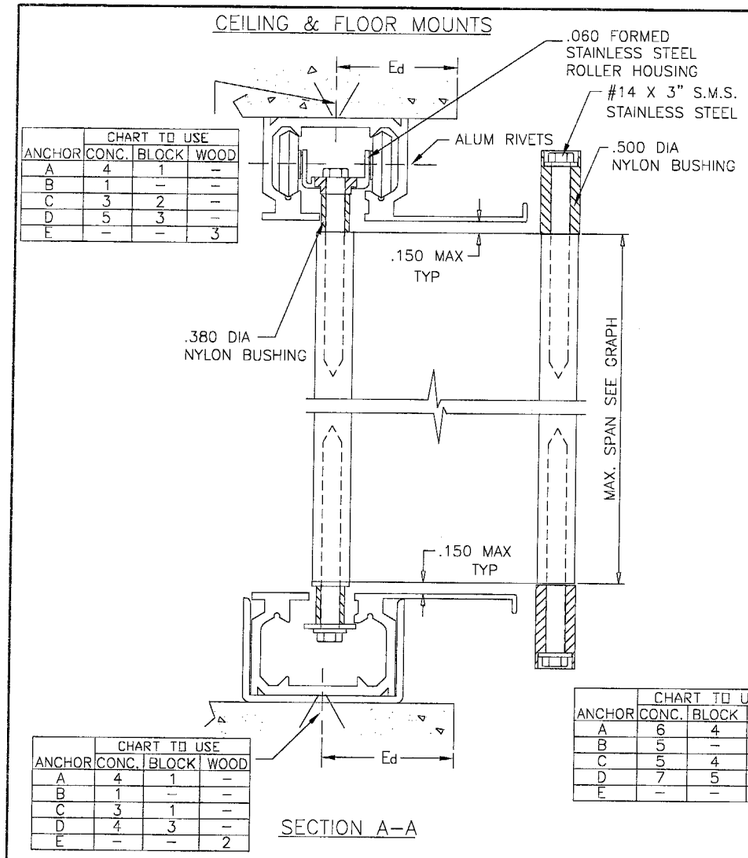

ANCHOR	CHART TO USE CONC.	BLOCK	WOOD
A	4	1	–
B	1	–	–
C	3	2	–
D	5	3	–
E	–	–	3

ANCHOR	CHART TO USE CONC.	BLOCK	WOOD
A	4	1	–
B	1	–	–
C	3	1	–
D	4	3	–
E	–	–	2

SECTION A–A

WALL MOUNTS

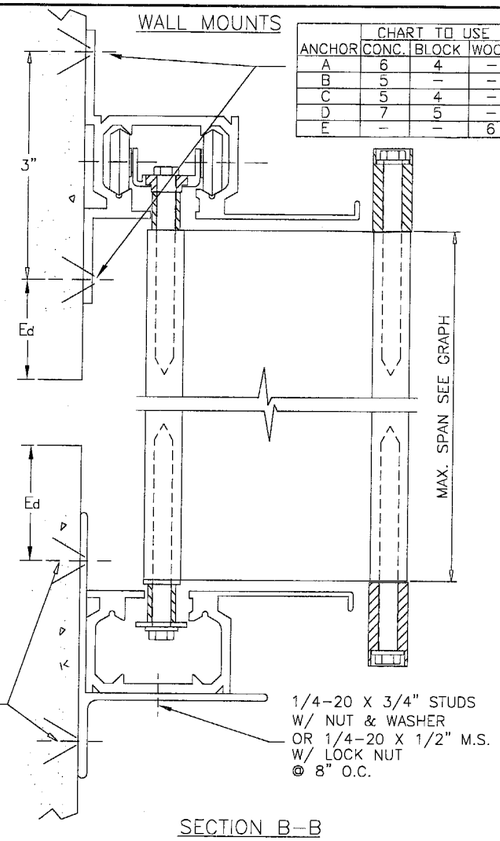

ANCHOR	CHART TO USE CONC.	BLOCK	WOOD
A	6	4	–
B	5	–	–
C	5	4	–
D	7	5	–
E	–	–	6

ANCHOR	CHART TO USE CONC.	BLOCK	WOOD
A	6	4	–
B	5	–	–
C	5	4	–
D	7	5	–
E	–	–	6

SECTION B–B

BUILT-OUT CONDITION

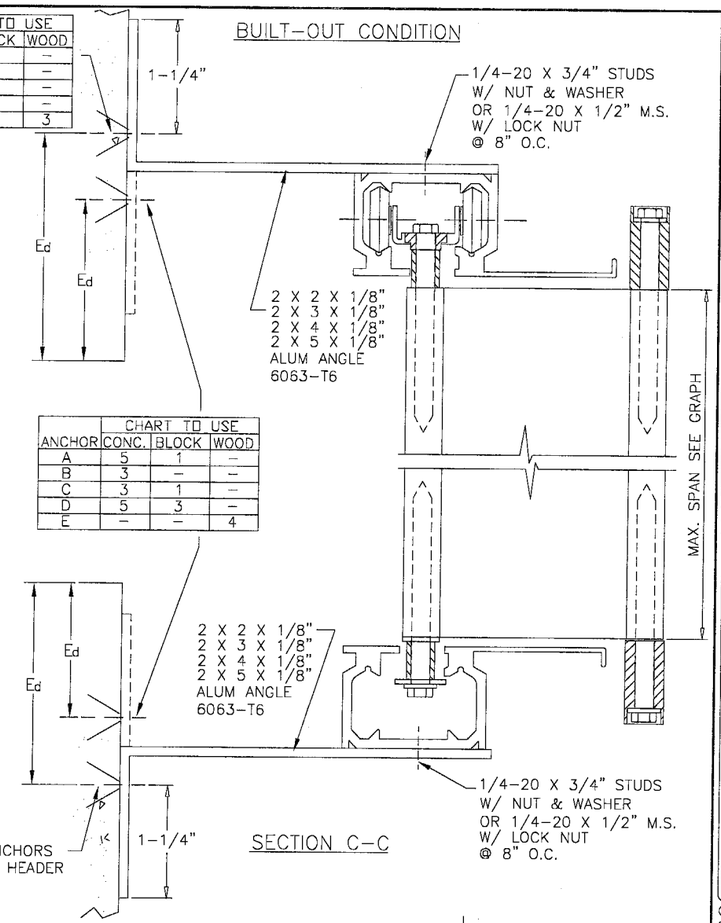

ANCHOR	CHART TO USE CONC.	BLOCK	WOOD
A	4	1	–
B	2	–	–
C	2	1	–
D	4	2	–
E	–	–	3

ANCHOR	CHART TO USE CONC.	BLOCK	WOOD
A	5	1	–
B	3	–	–
C	3	1	–
D	5	3	–
E	–	–	4

SECTION C–C

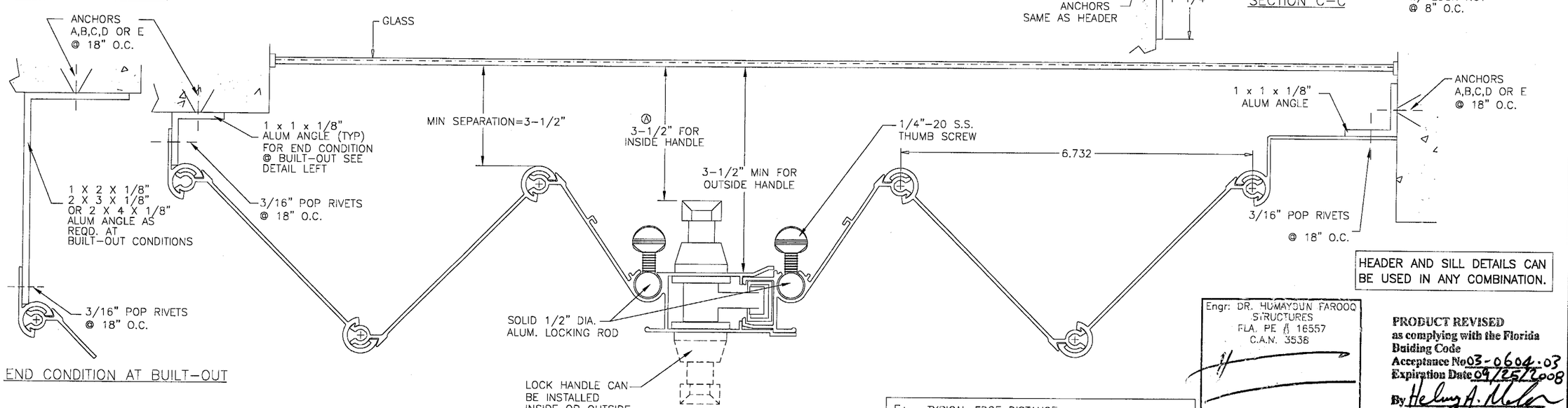

END CONDITION AT BUILT–OUT

SECTION D–D

HEADER AND SILL DETAILS CAN BE USED IN ANY COMBINATION.

FOR GENERAL NOTES AND EXTRUSION DETAILS SEE SHEET 1 OF 4.
FOR ANCHOR REQUIREMENTS SEE SHEET 4 OF 4.

Ed = TYPICAL EDGE DISTANCE
CONC. & BLOCK = 12d (12 ANCHOR DIAMETERS)
WOOD = 5d
FOR LESSER EDGE DISTANCES SEE SHEET 4 OF 4.

Engr: DR. HUMAYOUN FAROOQ
STRUCTURES
FLA. PE # 16557
C.A.N. 3538

OCT 24 2003

PRODUCT REVISED
as complying with the Florida Building Code
Acceptance No 03-0604.03
Expiration Date 09/25/2008
By Helen A. Muller
Miami Dade Product Control Division

AL-FAROOQ CORPORATION
ENGINEERS, PLANNERS & PRODUCT DESIGN
1235 SW 87 AVE
MIAMI, FLORIDA 33174
(305) 264-8100

ACCORDION\94-83RNI

ACCORDION SHUTTER DETAILS

ROLLADEN INC.
550 ANSIN BOULEVARD
HALLANDALE, FL. 33009
(305) 757 - 8591

revisions: no	date	by	description
A	1.26.95	H	SHEET 2 REVISED
B	05.23.03		ANCHOR CHARTS REV.
C	10.23.03		NO CHANGE THIS SHEET

date: 10-25-94
scale: 1/2" = 1"
dr. by: HAMID
chk. by:

drawing no.
94-83

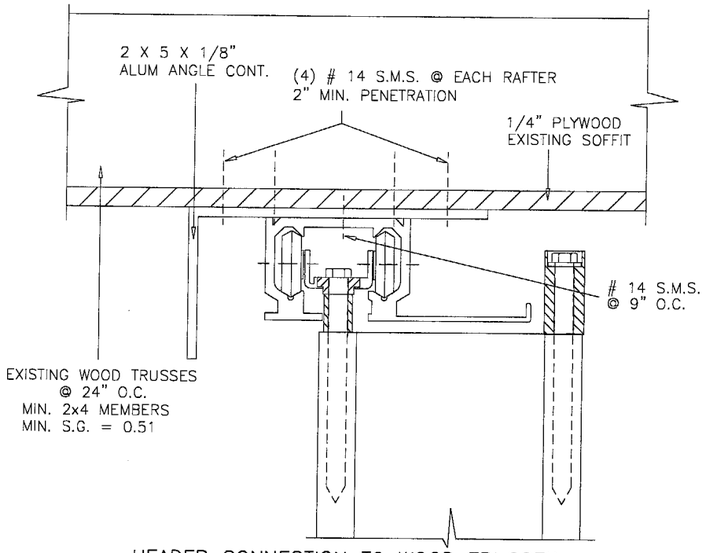

HEADER CONNECTION TO WOOD TRUSSES

FOR SHUTTER HEIGHT OF 108" MAX. DESIGN LOAD = 58 PSF
FOR SHUTTER HEIGHT OF 96" MAX. DESIGN LOAD = 65 PSF
FOR SHUTTER HEIGHT OF 84" MAX. DESIGN LOAD = 75 PSF

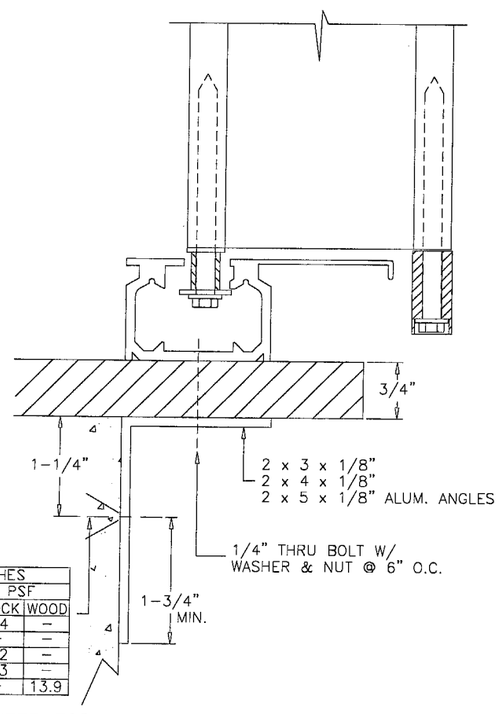

ANCHOR TYPE	ANCHOR SPACING INCHES					
	UPTO 50 PSF			UPTO 70 PSF		
	CONC	BLOCK	WOOD	CONC	BLOCK	WOOD
A	18.5	6.1	–	13.2	4.4	–
B	9	–	–	6.4	–	–
C	8.6	5.9	–	6.1	4.2	–
D	20.9	8.8	–	15	6.3	–
E	–	–	19.4	–	–	13.9

COUNTER TOP CONDITION

(PASS THRU WINDOW)
MAX SHUTTER HEIGHT = 6 FT.
MAX DESIGN LOAD = 70 PSF.

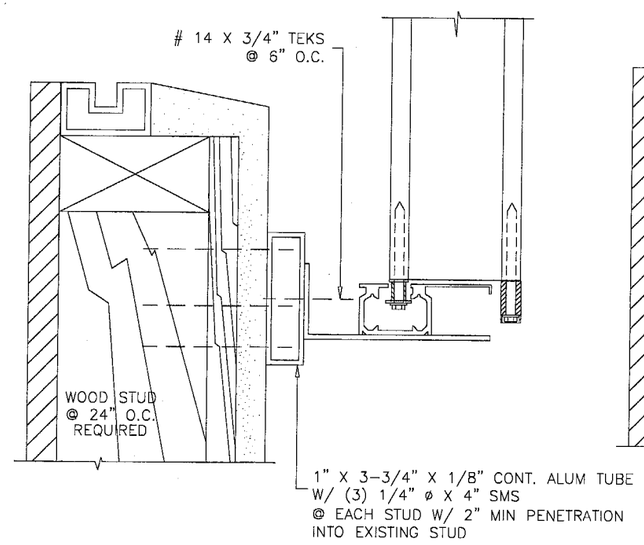

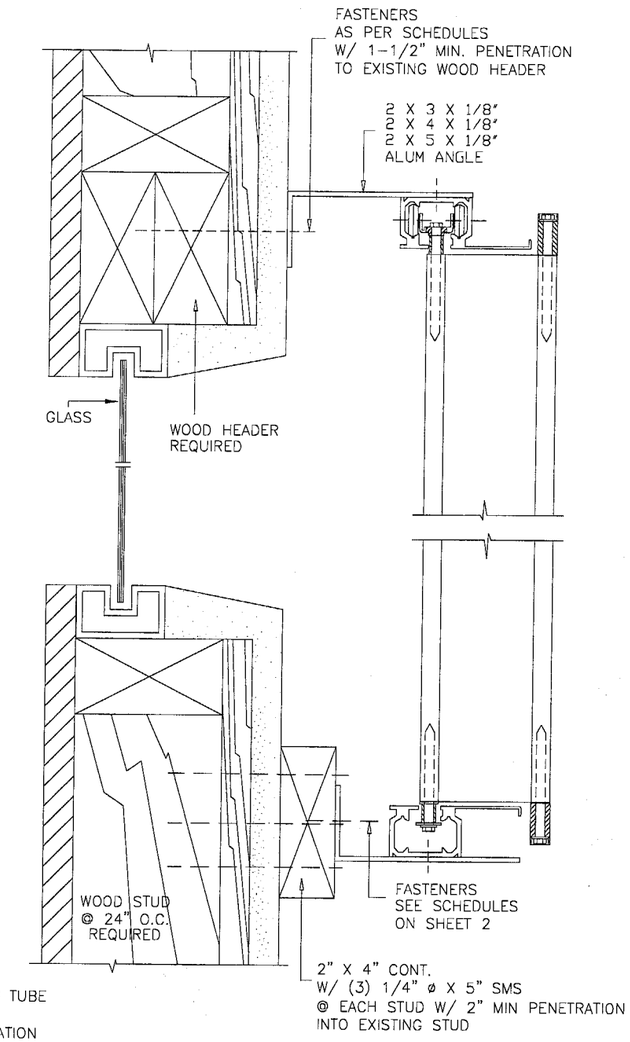

INSTALLATION DETAIL ON EXISTING WOOD BUCKS SCALE : 1/4"=1"

FOR SHUTTER HEIGHT OF 108" MAX. DESIGN LOAD = 140 PSF
FOR DIFFERENT HEADER/SILL COMBINATIONS SEE SHEET 2.

Engr: DR. HUMAYOUN FAROOQ
STRUCTURES
FLA. PE # 16557
C.A.N. 3538

OCT 2 4 2003

PRODUCT REVISED
as complying with the Florida Buiding Code
Acceptance No 03-0604.03
Expiration Date 09/25/2008
By Helmy A. Melo
Miami Dade Product Control Division

AL-FAROOQ CORPORATION
ENGINEERS, PLANNERS & PRODUCT DESIGN
1235 SW 87 AVE
MIAMI, FLORIDA 33174
(305) 264-8100

ACCORDION\94-83RNI

ACCORDION SHUTTER DETAILS

ROLLADEN INC.
550 ANSIN BOULEVARD
HALLANDALE, FL. 33009
(305) 757 - 8591

revisions:

no	date	by	description
A	1.26.95	H	SHEET 2 REVISED
B	05.23.03		ANCHOR REV.
C	10.23.03		NO CHANGE THIS SHEET

date: 10-25-94
scale: 1/2" = 1"
dr. by: HAMID
chk. by:

drawing no.
94-83

sheet 3 of 4

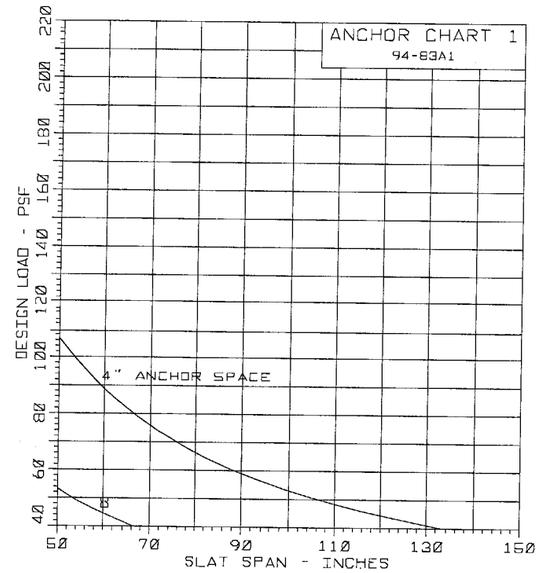

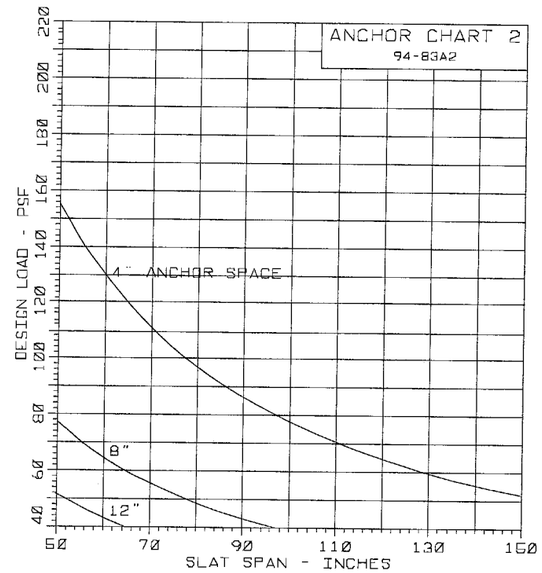

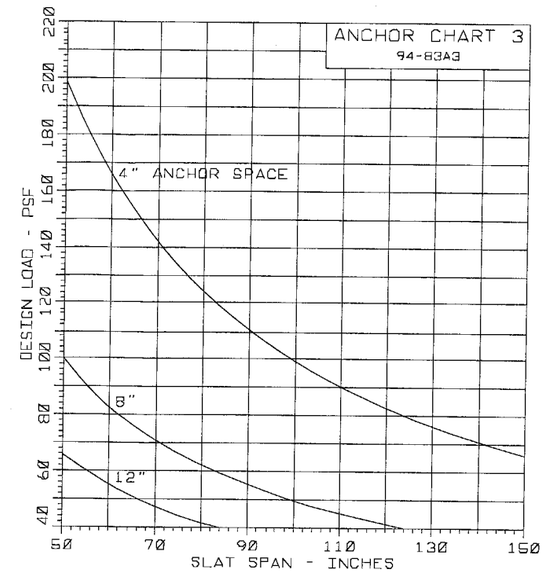

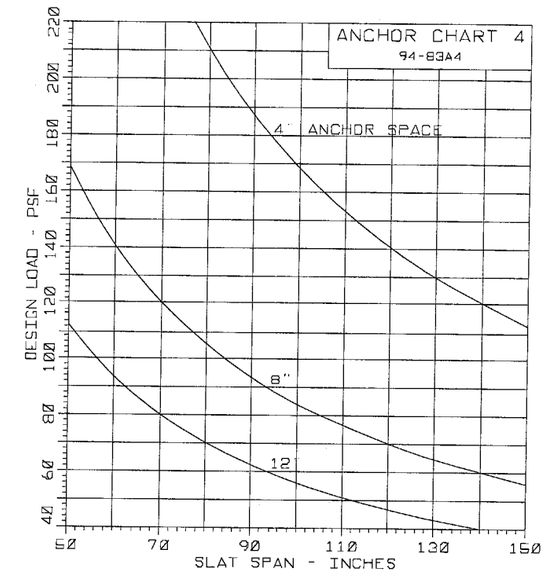

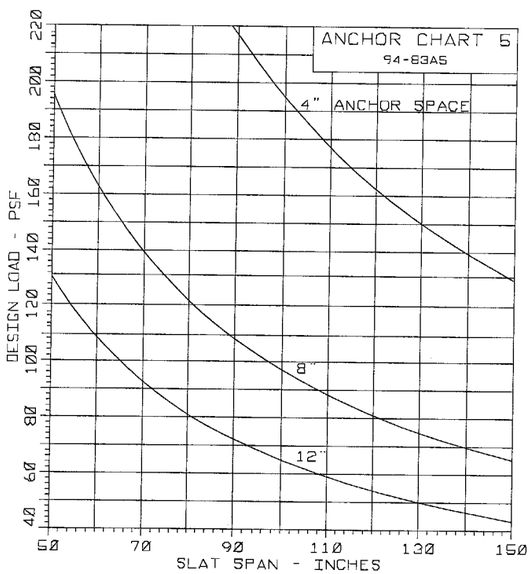

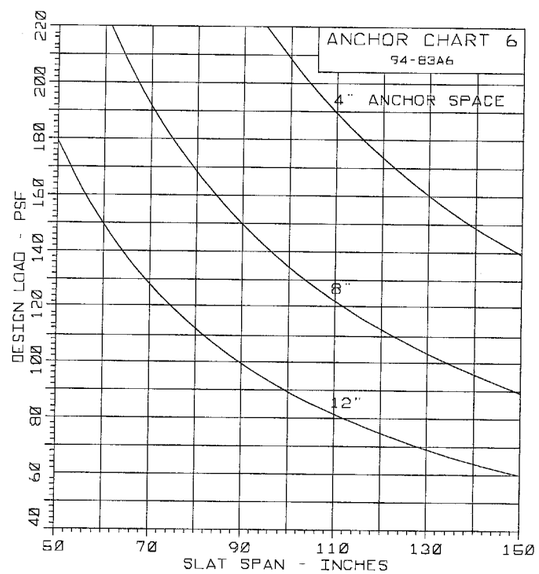

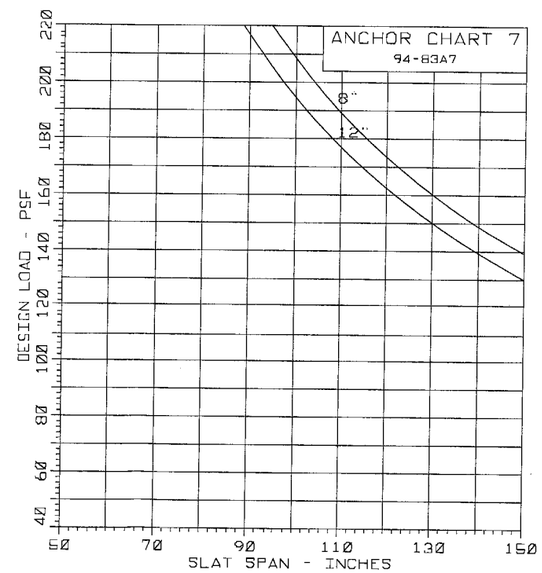

FASTENER SPACING IN MASONRY				
CHARTS ARE BASED ON TYPICAL EDGE DISTANCE = 12d. FOR LESSER EDGE DISTANCE DECREASE SPACING BY MULTIPLYING WITH THE FACTOR BELOW				
EDGE DIST.	12d=3"	10d=2-1/2"	8d=2"	6d=1-1/2"	5d=1-1/4"
FACTOR	1.00	0.86	0.71	0.57	0.50
EXAMPLE: FOR 3" EDGE DIST. SPACING = 12" O.C. (FROM CHART) FOR 2" EDGE DIST. SPACING = 12 X .71 = 8.5 O.C.				

TYPICAL EDGE DISTANCE IN WOOD = 1-1/4"
NO REDUCTION FACTOR IS REQUIRED

TYPICAL ANCHORS

ANCHOR (A) = 1/4" TAPCON 1-3/4" EMBEDMENT TO CONCRETE
1-1/4" EMBEDMENT TO BLOCK

ANCHOR (B) = #14 S.M.S. W/ RAWL SCRU-LEAD INTO CONCRETE
1-1/2" EMBEDMENT.

ANCHOR (C) = 1/4" x 1-1/4" METAL HIT ANCHORS (W/ ZAMAC BODY)
1" EMBEDMENT TO CONCRETE OR BLOCK

ANCHOR (D) = 1/4" RAWL CALK-IN, STAR 'TAMPIN' OR EQUAL.
TOTAL ANCHOR BODY INTO CONC.

ANCHOR (E) = #14 S.M.S.
1-1/2" MIN PENETRATION INTO WOOD (S.G. = 0.55)

NOTE: ANCHORS, USE FULL EMBEDMENT IN CONCRETE BEYOND THE COVERING (STUCCO, TILES, ETC.)

USE CHARTS 1 THRU 7 TO VERIFY ANCHOR REQUIREMENTS AND STRESS LIMITATIONS OF LOAD/SPAN COMBINATIONS FOR HEADER AND SILL.

Engr: DR. HUMAYOUN FAROOQ
STRUCTURES
FLA. PE # 16557
C.A.N. 3538

OCT 2 4 2003

PRODUCT REVISED
as complying with the Florida Building Code
Acceptance No 03-0604.03
Expiration Date 09/25/2008
By Helena A. Molina
Miami Dade Product Control Division

AL-FAROOQ CORPORATION
ENGINEERS, PLANNERS & PRODUCT DESIGN
1235 SW 87 AVE
MIAMI, FLORIDA 33174
(305) 264-8100

ACCORDION\94-83RN

ACCORDION SHUTTER DETAILS

ROLLADEN INC.
550 ANSIN BOULEVARD
HALLANDALE, FL. 33009
(305) 757 - 8591

revisions:

no	date	by	description
A	1.26.95	H	SHEET 2 REVISED
B	05.23.03		ANCHOR CHARTS REV.
C	10.23.03		NO CHANGE THIS SHEET

date: 10-25-94
scale: 1/2" = 1"
dr. by: HAMID
chk. by:

drawing no.
94-83

sheet 4 of 4