MIAMI-DADE

BUILDING CODE COMPLIANCE OFFICE (BCCO)
PRODUCT CONTROL DIVISION

MIAMI-DADE COUNTY, FLORIDA
METRO-DADE FLAGLER BUILDING
140 WEST FLAGLER STREET, SUITE 1603
MIAMI, FLORIDA 33130-1563
(305) 375-2901 FAX (305) 375-2908

NOTICE OF ACCEPTANCE (NOA)

F.E.C.P. Corporation – Cast-Crete Division
P.O. Box 24567
Tampa, Florida 33623

SCOPE:
This NOA is being issued under the applicable rules and regulations governing the use of construction materials. The documentation submitted has been reviewed by Miami-Dade County Product Control Division and accepted by the Board of Rules and Appeals (BORA) to be used in Miami Dade County and other areas where allowed by the Authority Having Jurisdiction (AHJ).

This NOA shall not be valid after the expiration date stated below. The Miami-Dade County Product Control Division (In Miami Dade County) and/or the AHJ (in areas other than Miami Dade County) reserve the right to have this product or material tested for quality assurance purposes. If this product or material fails to perform in the accepted manner, the manufacturer will incur the expense of such testing and the AHJ may immediately revoke, modify, or suspend the use of such product or material within their jurisdiction. BORA reserves the right to revoke this acceptance, if it is determined by Miami-Dade County Product Control Division that this product or material fails to meet the requirements of the applicable building code.

This product is approved as described herein, and has been designed to comply with the High Velocity Hurricane Zone of the Florida Building Code.

DESCRIPTION: "Cast-Crete" 8 inch High Strength Precast and Prestressed Concrete Lintels

APPROVAL DOCUMENT: Drawing No. FD8, titled "Cast-Crete 8" Lintel Fabrication Details", sheet 1 of 1, prepared by Craig Parrino, P.E., dated June 7, 1996, revision #2 dated January 28, 2003, and Drawing No. LT8, titled "Cast-Crete 8" Lintel Safe Load Tables", sheets 1 & 2 of 2, prepared by Craig Parrino, P.E., dated June 7, 1996, revision #5 dated March 24, 2003, all bearing the Miami-Dade County Product Control Revision stamp with the Notice of Acceptance number and expiration date by the Miami-Dade County Product Control Division.

MISSILE IMPACT RATING: Large and Small Missile Impact

LABELING: Each lintel shall bear a permanent label with the manufacturer's name or logo and the Miami-Dade County logo..

RENEWAL of this NOA shall be considered after a renewal application has been filed and there has been no change in the applicable building code negatively affecting the performance of this product.

TERMINATION of this NOA will occur after the expiration date or if there has been a revision or change in the materials, use, and/or manufacture of the product or process. Misuse of this NOA as an endorsement of any product, for sales, advertising or any other purposes shall automatically terminate this NOA. Failure to comply with any section of this NOA shall be cause for termination and removal of NOA.

ADVERTISEMENT: The NOA number preceded by the words Miami-Dade County, Florida, and followed by the expiration date may be displayed in advertising literature. If any portion of the NOA is displayed, then it shall be done in its entirety.

INSPECTION: A copy of this entire NOA shall be provided to the user by the manufacturer or its distributors and shall be available for inspection at the job site at the request of the Building Official.

This NOA **revises NOA # 01-0209.03** & consists of this page 1 as well as approval document mentioned above.
The submitted documentation was reviewed by **Helmy A. Makar, P.E.**

PRODUCT CONTROL ACCEPTED

Helmy A. Makar
08/07/03

NOA No 03-0605.05
Expiration Date: 05/21/2006
Approval Date: 08/07/2003

CAST-CRETE® HIGH STRENGTH PRECAST AND PRESTRESSED CONCRETE LINTELS

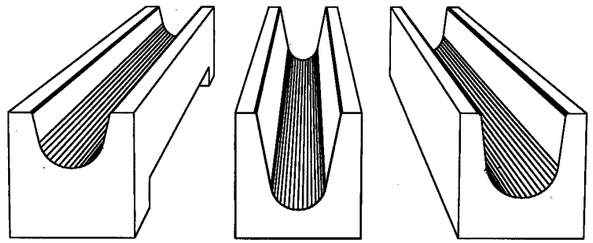

8" PRECAST W/ 2" RECESS DOOR U-LINTEL 8" PRECAST U-LINTEL 8" PRESTRESSED U-LINTEL

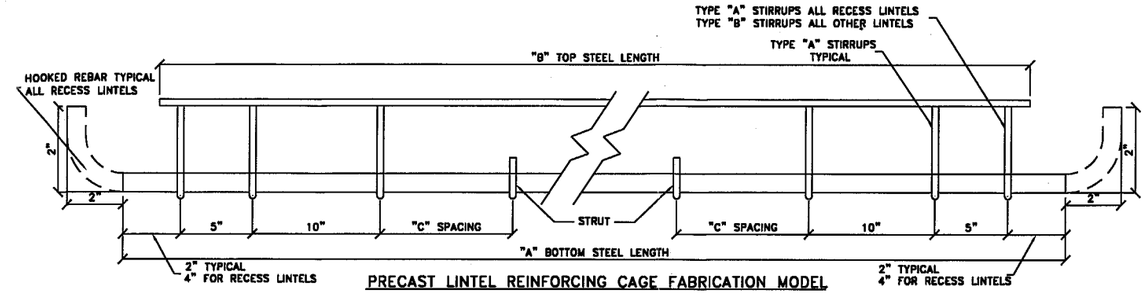

PRECAST LINTEL REINFORCING CAGE FABRICATION MODEL

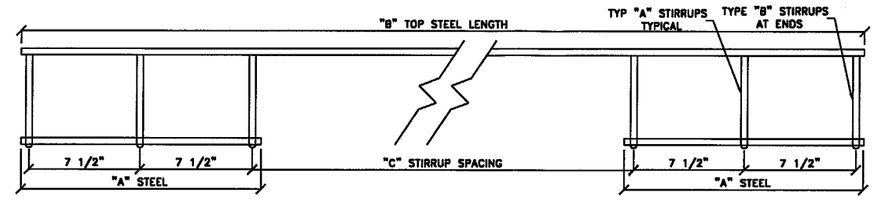

PRESTRESSED LINTEL REINFORCING CAGE FABRICATION MODEL

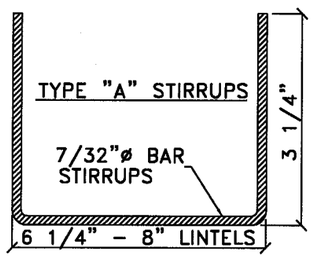

STIRRUP DETAILS
SCALE: N.T.S.

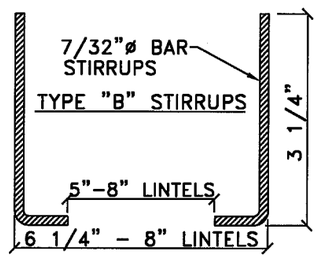

STIRRUP DETAILS
SCALE: N.T.S.

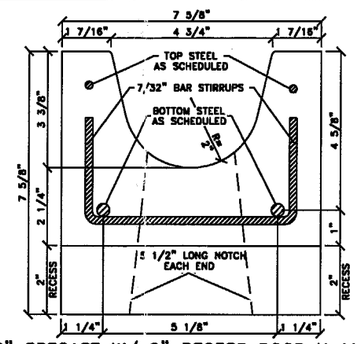

8" PRECAST W/ 2" RECESS DOOR U-LINTEL
SCALE: N.T.S.

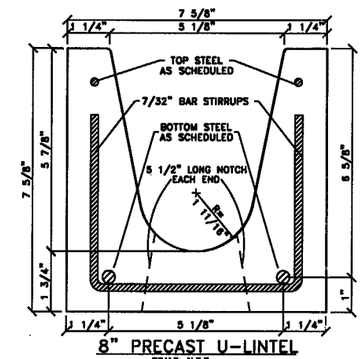

8" PRECAST U-LINTEL
SCALE: N.T.S.

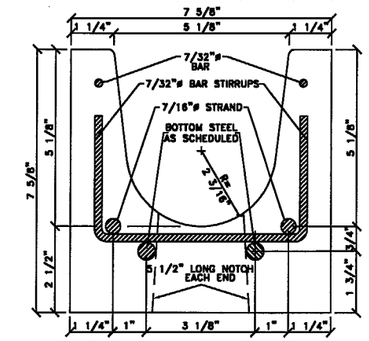

8" PRESTRESSED U-LINTEL
SCALE: N.T.S.

8" PRESTRESSED U-LINTEL DATA TABLE

LINTEL SIZE	VOLUME CY	WEIGHT LBS	"A" STEEL TYPE	"A" STEEL LENGTH	"B" TOP STEEL TYPE	"B" TOP STEEL LENGTH	"C" SPACING	NO. OF STIRRUPS
14'-8"	0.134	542	7/32 BAR	1'-3"	7/32 BAR	14'-6"	4 @ 3'-0"	9
15'-4"	0.140	567	7/32 BAR	1'-3"	7/32 BAR	15'-2"	4 @ 3'-2"	9
17'-4"	0.158	639	7/32 BAR	1'-3"	7/32 BAR	17'-2"	4 @ 3'-8"	9
19'-4"	0.176	713	7/32 BAR	1'-3"	7/32 BAR	19'-2"	4 @ 4'-2"	9
21'-4"	0.194	787	7/32 BAR #4 REBAR @ MIDSPAN	1'-3" 15'-0"	7/32 BAR	21'-2"	5 @ 3'-8 3/4"	10
22'-0"	0.200	811	7/32 BAR #4 REBAR @ MIDSPAN	1'-3" 16'-0"	7/32 BAR	21'-10"	5 @ 3'-10 3/8"	10
24'-0"	0.219	885	7/32 BAR #4 REBAR @ MIDSPAN	1'-3" 18'-0"	7/32 BAR	23'-10"	5 @ 4'-3 1/8"	10

8" PRECAST W/ 2" RECESS DOOR U-LINTEL DATA TABLE

LINTEL SIZE	OVERALL LENGTH	RECESS LENGTH	VOLUME CY	WEIGHT LBS	"A" BOTTOM STEEL TYPE	"A" BOTTOM STEEL LENGTH	"B" TOP STEEL TYPE	"B" TOP STEEL LENGTH	"C" SPACING	NO. OF STRUTS/ STIRRUPS
2'-8"	4'-4"	3'-0"	0.036	146	#3 REBAR	3'-10" PLUS HOOK	7/32 BAR	3'-8"	N/A	4
3'-0"	4'-6"	3'-4"	0.037	150	#3 REBAR	4'-0" PLUS HOOK	7/32 BAR	3'-10"	N/A	4
4'-0"	5'-8"	4'-4"	0.047	190	#3 REBAR	5'-2" PLUS HOOK	7/32 BAR	5'-0"	N/A	6
4'-4"	5'-10"	4'-8"	0.047	190	#3 REBAR	5'-4" PLUS HOOK	7/32 BAR	5'-2"	N/A	6
5'-0"	6'-8"	5'-4"	0.054	219	#4 REBAR	5'-2" PLUS HOOK	#3 REBAR	6'-0"	N/A	6
6'-0"	7'-6"	6'-4"	0.060	243	#4 REBAR	6'-0" PLUS HOOK	#3 REBAR	6'-10"	N/A	6
8'-0"	9'-8"	8'-4"	0.078	316	#4 REBAR	8'-2" PLUS HOOK	#3 REBAR	9'-0"	2'-0"	8

8" PRECAST U-LINTEL DATA TABLE

LINTEL SIZE	VOLUME CY	WEIGHT LBS	"A" BOTTOM STEEL TYPE	"A" BOTTOM STEEL LENGTH	"B" TOP STEEL TYPE	"B" TOP STEEL LENGTH	"C" SPACING	NO. OF STRUTS/ STIRRUPS
2'-10"	0.026	102	#3 REBAR	2'-9"	7/32 BAR	2'-6"	N/A	4
3'-6"	0.032	126	#3 REBAR	3'-5"	7/32 BAR	3'-2"	N/A	4
4'-0"	0.037	144	#3 REBAR	3'-11"	7/32 BAR	3'-8"	N/A	4
4'-6"	0.041	162	#3 REBAR	4'-5"	7/32 BAR	4'-2"	N/A	4
5'-4"	0.049	192	#3 REBAR	5'-3"	7/32 BAR	5'-0"	N/A	6
5'-10"	0.054	210	#3 REBAR	5'-9"	7/32 BAR	5'-6"	N/A	6
6'-6"	0.060	234	#4 REBAR	6'-5"	7/32 BAR	6'-2"	N/A	6
7'-6"	0.069	270	#4 REBAR	7'-5"	7/32 BAR	7'-2"	N/A	6
9'-4"	0.086	336	#4 REBAR	9'-3"	#3 REBAR	9'-0"	2'-0"	8
10'-6"	0.096	378	#4 REBAR	10'-5"	#3 REBAR	10'-2"	2'-0"	8
11'-4"	0.104	408	#5 REBAR	11'-3"	#3 REBAR	11'-0"	3'-0"	8
12'-0"	0.110	432	#5 REBAR	11'-11"	#3 REBAR	11'-8"	3'-0"	8
13'-4"	0.122	480	#5 REBAR	13'-3"	#3 REBAR	13'-0"	3'-0"	8
14'-0"	0.129	504	#5 REBAR	13'-11"	#3 REBAR	13'-8"	3'-0"	8

GENERAL NOTES:

1. REINFORCING STEEL: 7/32 BAR ASTM A510; #3, #4, AND #5 REBAR GRADE 60 ASTM A615; 7/16 INCH DIAMETER 270KSI LOW-RELAXATION PRESTRESSING SRTAND ASTM A416.
2. CONCRETE STRENGTHS: f'c = 6000 PSI FOR 8" PRESTRESSED LINTELS; f'c = 3500 PSI FOR ALL PRECAST 8 INCH LINTELS.
3. INITIAL PRESTRESS FORCE = 0.70 x fpu.
4. STRIPPING STRENGTH: PRESTRESSED LINTELS = 3500 PSI.
5. NOTE: THE TOTAL NUMBER OF STIRRUPS REQUIRED IS COUNTED STARTING FROM EACH END OF THE REINFORCING CAGE; FOR EXAMPLE - NO. OF STIRRUPS = 4, THEN THE REINFORCING CAGE MODEL SHOWS 2 STIRRUPS FROM EACH END.

THIS PROPRIETARY INFORMATION IS PROVIDED FOR PRODUCT APPROVAL. IT IS PROTECTED BY COPYRIGHT LAWS AND CANNOT BE REPRODUCED OR DISTRIBUTED WITHOUT THE PRIOR WRITTEN CONSENT OF FECP CORPORATION.

Craig Parrino
5-30-03
CRAIG PARRINO
6324 CR 579
SEFFNER, FL 33584
FL. P.E. LIC. NO. 44756

PRODUCT REVISED
as complying with the Florida Buiding Code
Acceptance No 03-0605.05
Expiration Date 05/21/2006
By Helmy A. Meter
Miami Dade Product Control Division

NO.	BY	REVISION	DATE
1	CP	GENERAL REVISION NUMBER ONE	11/08/96
2	TO	GENERAL REVISION NUMBER TWO	1/28/03
3			
4			
5			

MEMBER OF NATIONAL CONCRETE MASONRY ASSOCIATION

FECP
FLORIDA ENGINEERED CONSTRUCTION PRODUCTS CORP.
CAST-CRETE DIVISION
COUNTY ROAD 579, ONE MILE NORTH OF I-4
P.O. BOX 24567, TAMPA, FLORIDA 33623
PHONE: 813-621-4641 FAX: 813-620-3602

TITLE: CAST-CRETE 8" LINTEL FABRICATION DETAILS

FILE NAME: DBSUB1.DWG	DRAWN BY: JOHN HOY		SCALE: NOT TO SCALE
DATE: 06/07/96	CHECKED BY: CRAIG PARRINO, P.E. - REG. NO. 44756		DRAWING No. FD8 SHEET 1 OF 1

SAFE GRAVITY LOADS FOR 8" PRECAST & PRESTRESSED U-LINTELS

CAST-CRETE	SAFE LOAD - POUNDS PER LINEAR FOOT							
LENGTH \ TYPE	8U8	8F8-0B	8F12-0B	8F16-0B	8F20-0B	8F24-0B	8F28-0B	8F32-0B
		8F8-1B	8F12-1B	8F16-1B	8F20-1B	8F24-1B	8F28-1B	8F32-1B
2'-10" (34") PRECAST	2231	3069	4605	6113	7547	8974	10394	11809
		3069	4605	6113	7547	8974	10394	11809
3'-6" (42") PRECAST	2231	3069	3719	5163	6607	8054	9502	10951
		3069	4605	6113	7547	8974	10394	11809
4'-0" (48") PRECAST	1966	2561	2751	3820	4890	5961	7034	8107
		2693	4605	6113	7547	8974	10394	11809
4'-6" (54") PRECAST	1599	1969	2110	2931	3753	4576	5400	6224
		2189	4375	6113	7547 (7)	8672	10294	11809
5'-4" (64") PRECAST	1217	1349	1438	1999	2560	3123	3686	4249
		1663	3090	5365	7547 (36)	7342 (19)	8733 (19)	10127 (19)
5'-10" (70") PRECAST	1062	1105	1173	1631	2090	2549	3009	3470
		1451	2622	4360	7168 (45)	6036 (19)	7181 (19)	8328 (20)
6'-6" (78") PRECAST	908	1238	2177	3480	3031	3707	4383	5061
		1238	2177	3480	5381	8360	10394 (37)	8825 (14)
7'-6" (90") PRECAST	743	1011	1729	2632	2205	2698	3191	3685
		1011	1729	2661	3898	5681	8467 (44)	6472 (15)
9'-4" (112") PRECAST	554	699	1160	1625	2564	3486	2818	3302
		752	1245	1843	2564	3486	4705 (37)	6390 (47)
10'-6" (126") PRECAST	475	535	890	1247	2093	2777	2163	2536
		643	1052	1533	2093	2781	3643 (38)	4754 (45)
11'-4" (136") PRECAST	362	582	945	1366	1846	2423	3127	4006
		582	945	1366	1846	2423	3127	4006
12'-0" (144") PRECAST	337	540	873	1254	1684	2193	2805	3552
		540	873	1254	1684	2193	2805	3552
13'-4" (160") PRECAST	296	471	755	1075	1428	1838	2316	2883
		471	755	1075	1428	1838	2316	2883
14'-0" (168") PRECAST	279	424	706	1002	1326	1697	2127	2630
		442	706	1002	1326	1697	2127	2630
14'-8" (176") PRESTRESSED	N.R.	NR	NR	NR	NR	NR	NR	NR
		458	783	1370	1902	2245	2517	2712
15'-4" (184") PRESTRESSED	N.R.	NR	NR	NR	NR	NR	NR	NR
		412	710	1250	1733	2058	2320	2513
17'-4" (208") PRESTRESSED	N.R.	NR	NR	NR	NR	NR	NR	NR
		300	548	950	1326	1609	1849	2047
19'-4" (232") PRESTRESSED	N.R.	NR	NR	NR	NR	NR	NR	NR
		235	420	750	1037	1282	1515	1716
21'-4" (256") PRESTRESSED	N.R.	NR	NR	NR	NR	NR	NR	NR
		180	340	598	845	1114	1359	1468
22'-0" (264") PRESTRESSED	N.R.	NR	NR	NR	NR	NR	NR	NR
		165	315	550	784	1047	1285	1399
24'-0" (288") PRESTRESSED	N.R.	NR	NR	NR	NR	NR	NR	NR
		129	250	450	654	884	1092	1222

(#) THE NUMBERS IN PARENTHESIS ARE PERCENT REDUCTIONS FOR GR40 FIELD ADDED REBAR. SEE NOTE NO. 4

SAFE LATERAL LOADS FOR 8" PRECAST & PRESTRESSED U-LINTELS

CAST-CRETE	SAFE LOAD PLF		
LENGTH \ TYPE	8U8	8F8	REINF. CMU*
2'-10" (34") PRECAST	1293	1642	2135
3'-6" (42") PRECAST	1025	1024	1830
4'-0" (48") PRECAST	765	763	1365
4'-6" (54") PRECAST	592	591	1057
5'-4" (64") PRECAST	411	411	734
5'-10" (70") PRECAST	340	339	607
6'-6" (78") PRECAST	507	721	483
7'-6" (90") PRECAST	424	534	357
9'-4" (112") PRECAST	326	512	227
10'-6" (126") PRECAST	284	401	178
11'-4" (136") PRECAST	260	452	152
12'-0" (144") PRECAST	244	402	135
13'-4" (160") PRECAST	217	324	109
14'-0" (168") PRECAST	205	293	98
14'-8" (176") PRESTRESSED	N.R.	284	89
15'-4" (184") PRESTRESSED	N.R.	259	82
17'-4" (208") PRESTRESSED	N.R.	194	63
19'-4" (232") PRESTRESSED	N.R.	148	51
21'-4" (256") PRESTRESSED	N.R.	125	42
22'-0" (264") PRESTRESSED	N.R.	116	39
24'-0" (288") PRESTRESSED	N.R.	91	33

* SEE NOTE 18

SAFE UPLIFT LOADS FOR 8" PRECAST & PRESTRESSED U-LINTELS

CAST-CRETE	SAFE LOAD - POUNDS PER LINEAR FOOT						
LENGTH \ TYPE	8F8-1T	8F12-1T	8F16-1T	8F20-1T	8F24-1T	8F28-1T	8F32-1T
	8F8-2T	8F12-2T	8F16-2T	8F20-2T	8F24-2T	8F28-2T	8F32-2T
2'-10" (34") PRECAST	1972	3173	4460	5747	7034	8321	9608
	1972	3173	4460	5747	7034	8321	9608
3'-6" (42") PRECAST	1569	2524	3547	4569	5591	6613	7636
	1569	2524	3547	4569	5591	6613	7636
4'-0" (48") PRECAST	1363	2192	3079	3966	4853	5740	6627
	1363	2192	3079	3966	4853	5740	6627
4'-6" (54") PRECAST	1207	1940	2724	3508	4292	5077	5861
	1207	1940	2724	3508	4292	5077	5861
5'-4" (64") PRECAST	1016	1632	2290	2949	3607	4265	4924
	1016	1632	2290	2949	3607	4265	4924
5'-10" (70") PRECAST	909	1492	2093	2694	3295	3897	4498
	929	1492	2093	2694	3295	3897	4498
6'-6" (78") PRECAST	835 (12)	1340	1880	2419	2959	3498	4038
	835	1340	1880	2419	2959	3498	4038
7'-6" (90") PRECAST	727 (23)	1021	1634 (12)	2102 (11)	2571 (10)	3039 (10)	3508 (9)
	727	1166	1634	2102	2571	3039	3508
9'-4" (112") PRECAST	591	680	1133 (15)	1471 (15)	1811 (15)	2152 (16)	2494 (15)
	591	851	1326	1705	2084	2463	2842
10'-6" (126") PRECAST	530	552	914 (15)	1185 (15)	1458 (15)	1732 (15)	2007 (15)
	530	686	1183	1526	1865	2204	2544
11'-4" (136") PRECAST	474	485	798 (15)	1034 (15)	1272 (15)	1510 (15)	1749 (15)
	494	599	1028	1422	1738	2053	2369
12'-0" (144") PRECAST	470 (9)	441	723 (14)	936 (14)	1151 (15)	1366 (15)	1582 (15)
	470	543	928	1349	1649	1948	2247
13'-4" (160") PRECAST	418 (15)	373	606 (14)	783 (14)	962 (14)	1141 (14)	1321 (14)
	428	455	770	1145	1444	1718	1993
14'-0" (168") PRECAST	384 (15)	346	559 (14)	723 (14)	887 (14)	1052 (14)	1218 (14)
	410	420	709	1050	1434 (8)	1694 (8)	1954 (7)
14'-8" (176") PRESTRESSED	239	323	519 (13)	671 (13)	823 (13)	976 (14)	1129 (14)
	246	390	655	968	1324 (8)	1625 (11)	1874 (11)
15'-4" (184") PRESTRESSED	224	302	485 (13)	626 (13)	767 (13)	909 (13)	1052 (13)
	230	364	609	897	1224 (8)	1562 (14)	1801 (14)
17'-4" (208") PRESTRESSED	187	255	404 (12)	520 (12)	637 (12)	754 (12)	872 (12)
	192	303	500	732	993 (8)	1268 (14)	1470 (14)
19'-4" (232") PRESTRESSED	162	222	347 (11)	446 (11)	546 (12)	646 (12)	746 (12)
	166	261	424	616	831 (8)	1057 (14)	1225 (14)
21'-4" (256") PRESTRESSED	142	198	306 (11)	393 (11)	480 (11)	567 (11)	654 (11)
	142	230	369	531	713 (7)	903 (13)	1046 (13)
22'-0" (264") PRESTRESSED	137	192	295 (10)	378 (11)	461 (10)	545 (11)	629 (11)
	137	221	354	508	681 (7)	861 (13)	997 (13)
24'-0" (288") PRESTRESSED	124	175	267 (10)	341 (10)	416 (10)	491 (10)	566 (10)
	124	200	316	450	600 (7)	756 (12)	875 (13)

(#) THE NUMBERS IN PARENTHESIS ARE PERCENT REDUCTIONS FOR GR40 FIELD ADDED REBAR. SEE NOTE NO. 4

CRAIG PARRINO
6324 CR 579
SEFFNER, FL 33584
FL. P.E. LIC. NO 44756

Craig Parrino
5-30-03

PRODUCT REVISED
as complying with the Florida Building Code
Acceptance No 03-0605.05
Expiration Date 05/21/2006
By Helmy A. Malak
Miami Dade Product Control Division

SEE GENERAL NOTES - SHEET 2 OF 2

NO.	BY	REVISION	DATE
1	CP	GENERAL REVISION NUMBER ONE	11/08/96
2	CP	RECESS TYPE DESIGNATION	12/30/96
3	CP	8U8 11'-4" THRU 14'-0"	11/08/96
4	CP	GENERAL REVISION	04/28/98
5	CP	GENERAL REVISION	03/24/03

MEMBER OF NATIONAL CONCRETE MASONRY ASSOCIATION

FECP
FLORIDA ENGINEERED CONSTRUCTION PRODUCTS CORP.
CAST-CRETE DIVISION
COUNTY ROAD 579, ONE MILE NORTH OF I-4
P.O. BOX 24567, TAMPA, FLORIDA 33623
(813) 621-4641 FAX (813) 620-3602

TITLE: CAST-CRETE 8" LINTEL SAFE LOAD TABLES

FILE NAME: DBSUB2.DWG	DRAWN BY: TODD OSTING	SCALE: N.T.S.	
DATE: 6/07/96	CHECKED BY: CRAIG PARRINO, P.E. - REG. NO. 44756	DRAWING: NO. LT8	SHEET 1 OF 2

SAFE GRAVITY LOADS FOR 8" PRECAST w/ 2" RECESS DOOR U-LINTELS

CAST-CRETE	SAFE LOAD - POUNDS PER LINEAR FOOT							
LENGTH \ TYPE	8RU6	8RF6-0B	8RF10-0B	8RF14-0B	8RF18-0B	8RF22-0B	8RF26-0B	8RF30-0B
		8RF6-1B	8RF10-1B	8RF14-1B	8RF18-1B	8RF22-1B	8RF26-1B	8RF30-1B
4'-4" (52") PRECAST	1635	1749	3355	3280	4349	5421	6493	7567
		1891	3699	5206	6639	8060	9479	10893
4'-6" (54") PRECAST	1494	1596	3063	2992	3968	4946	5924	6904
		1756	3699	5206	6639	8060	9479	10893
5'-8" (68") PRECAST	866	920	1770	1716	2277	2839	3402	3966
		1167	2481	4567	6389	8060 (34)	7917 (19)	9311 (19)
5'-10" (70") PRECAST	810	859	1653	1600	2124	2649	3174	3700
		1113	2342	4242	6639 (10)	8060 (39)	7402 (19)	8706 (19)
6'-8" (80") PRECAST	797	901	1825	3120	5048	7747	9448	7360
		901	1825	3120	5048	7915	9479	10893 (32)
7'-6" (90") PRECAST	669	755	1490	2459	3776	5743	7239	5623
		755	1490	2459	3776	5743	8998 (19)	10893 (48)
9'-8" (116") PRECAST	411	466	999	1568	2253	3129	4091	3146
		526	999	1568	2253	3129	4150	5891 (47)

(#) THE NUMBERS IN PARENTHESIS ARE PERCENT REDUCTIONS FOR GR40 FIELD ADDED REBAR. SEE NOTE NO. 4

SAFE LATERAL LOADS FOR 8" PRECAST w/ 2" RECESS DOOR U-LINTELS

CAST-CRETE	SAFE LOAD PLF		
LENGTH \ TYPE	8RU6	8RF6	REINF. CMU*
4'-4" (52") PRECAST	758	757	1365
4'-6" (54") PRECAST	694	693	1249
5'-8" (68") PRECAST	408	407	734
5'-10" (70") PRECAST	382	381	687
6'-8" (80") PRECAST	595	788	510
7'-6" (90") PRECAST	509	674	393
9'-8" (116") PRECAST	370	490	227

* SEE NOTE 18

SAFE UPLIFT LOADS FOR 8" PRECAST w/ 2" RECESS DOOR U-LINTELS

CAST-CRETE	SAFE LOAD - POUNDS PER LINEAR FOOT						
LENGTH \ TYPE	8RF6-1T	8RF10-1T	8RF14-1T	8RF18-1T	8RF22-1T	8RF26-1T	8RF30-1T
	8RF6-2T	8RF10-2T	8RF14-2T	8RF18-2T	8RF22-2T	8RF26-2T	8RF30-2T
4'-4" (52") PRECAST	905	1748	2635	3522	4409	5296	6183
	905	1748	2635	3522	4409	5296	6183
4'-6" (54") PRECAST	867	1675	2525	3374	4224	5074	5924
	867	1675	2525	3374	4224	5074	5924
5'-8" (68") PRECAST	675	1301	1960	2618	3277	3935	4594
	675	1301	1960	2618	3277	3935	4594
5'-10" (70") PRECAST	655	1262	1900	2538	3176	3815	4453
	655	1262	1900	2538	3176	3815	4453
6'-8" (80") PRECAST	570	1012	1651	2204	2758	3312	3865
	570	1097	1651	2204	2758	3312	3865
7'-6" (90") PRECAST	506	797	1462 (8)	1952 (7)	2442 (6)	2931 (6)	3257
	506	967	1462	1952	2442	2931	3421
9'-8" (116") PRECAST	395	491	931 (12)	1301 (15)	1640 (15)	1980 (15)	2322 (16)
	395	589	1135	1514	1893	2272	2652

(#) THE NUMBERS IN PARENTHESIS ARE PERCENT REDUCTIONS FOR GR40 FIELD ADDED REBAR. SEE NOTE NO. 4

GENERAL NOTES

1) Materials:
   - f'c 8" precast lintel = 3500 psi
   - f'c prestressed lintel = 6000 psi
   - f'c grout = 3000 psi with maximum 3/8 inch aggregate
   - concrete masonry units (CMU) per ASTM C90 with minimum net area compressive strength = 1900 psi
   - rebar per ASTM A615 Grade 60
   - prestressing strand per ASTM A416 Grade 270 low relaxation
   - mortar per ASTM C270 Type M or S
2) All safe load tables based on minimum 4 inch nominal bearing.
   Exception: Safe loads for lintel type 8U8 and 8RU6 must be reduced by 20% if bearing length is less than 6 1/2 inches.
3) Provide full mortar bed and head joints.
4) The number in parenthesis indicates the percent reduction for grade 40 field added rebar.
   Example: 7'-6" Lintel 8F32-1B safe gravity load = 6472 (15) w/ 15% reduction ⇒ 6472 (.85) = 5501 plf
5) All lintels meet or exceed L/360 deflection.
   Exception: Prestress lintel type 8F8 17'-4" and longer meets or exceeds L/180 deflection.
   Use is limited to conditions meeting the Florida Building Code Sections 1610 or 1612 as applicable
6) Shore filled lintels as required.
7) One #7 rebar may be substituted for two #5 rebars.
8) Installation/attachment of lintel must comply with the architectural and/or structural documents.
9) The designer may evaluate concentrated loads from the safe load tables by calculating the maximum resisting moment and shear at d-away from the face of support.
10) N.R. = Not Rated
11) Bottom field added rebar to be located at the bottom of the lintel cavity.
12) Lintels are manufactured with 5-1/2" long notches at the ends to accomodate vertical cell reinforcing and grouting.
13) The exterior surface of lintels installed in exterior concrete masonry walls shall have a coating of stucco applied in accordance with ASTM C-926 or other approved coating.
14) Lintels loaded simultaneously with vertical (gravity or uplift) and horizontal (lateral) loads should be checked for the combined loading with the following equation:

$$\frac{\text{Applied vertical load}}{\text{Safe vertical load}} + \frac{\text{Applied horizontal load}}{\text{Safe horizontal load}} \leq 1.0$$

15) For composite lintel heights not shown, use safe load from next lower height shown.
16) For lintel lengths not shown, use safe load from next longest length shown.
17) Safe loads are superimposed allowable loads.
18) Additional lateral load capacity can be obtained by the designer by providing additional reinforced concrete masonry above the lintel. See sketch below:

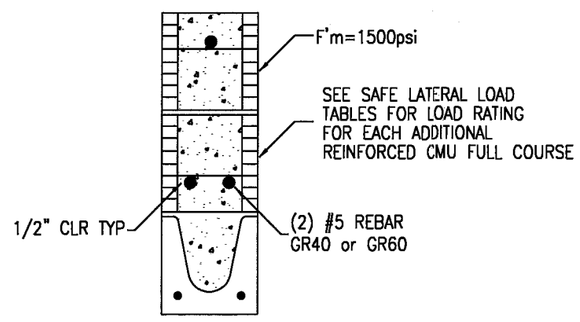

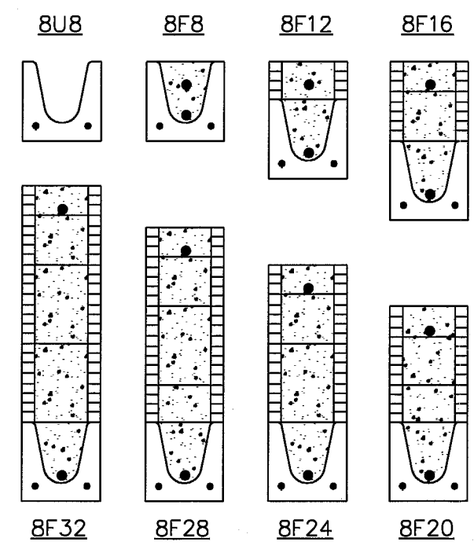

TYPE DESIGNATION

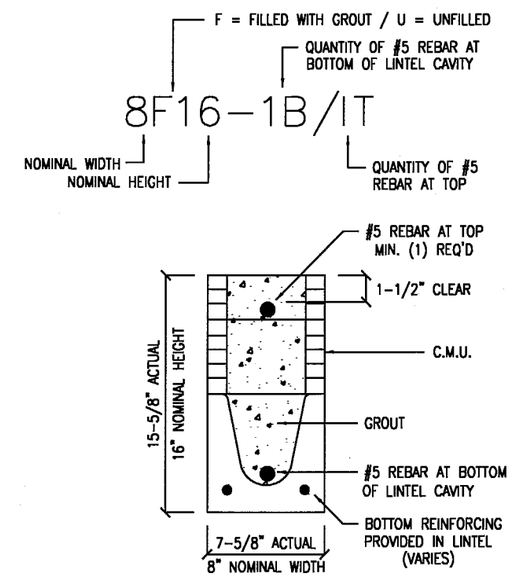

Craig Parrino
5-30-03

CRAIG PARRINO
6324 CR 579
SEFFNER, FL 33584
FL. P.E. LIC. NO. 44756

PRODUCT REVISED
as complying with the Florida Building Code
Acceptance No. 03-0605.05
Expiration Date 05/21/2006
By Helmy A. Mehlar
Miami Dade Product Control Division

NO.	BY	REVISION	DATE
1	CP	GENERAL REVISION NUMBER ONE	11/08/96
2	CP	RECESS TYPE DESIGNATION	12/30/96
3	CP	8U8 11'-4" THRU 14'-0"	11/08/96
4	CP	GENERAL REVISION	04/28/98
5	CP	GENERAL REVISION	03/24/03

MEMBER OF NATIONAL CONCRETE MASONRY ASSOCIATION

FECP
FLORIDA ENGINEERED CONSTRUCTION PRODUCTS CORP.
CAST-CRETE DIVISION
COUNTY ROAD 579, ONE MILE NORTH OF I-4
P.O. BOX 24567, TAMPA, FLORIDA 33623
(813) 621-4641 FAX (813) 620-3602

TITLE: CAST-CRETE 8" LINTEL SAFE LOAD TABLES			
FILE NAME: DBSUB3.DWG	DRAWN BY: TODD OSTING	SCALE: N.T.S.	
DATE: 6/07/96	CHECKED BY: CRAIG PARRINO, P.E. - REG. NO. 44756	DRAWING: NO. LTB	SHEET 2 OF 2