MIAMI-DADE

BUILDING CODE COMPLIANCE OFFICE (BCCO)
PRODUCT CONTROL DIVISION

MIAMI-DADE COUNTY, FLORIDA
METRO-DADE FLAGLER BUILDING
140 WEST FLAGLER STREET, SUITE 1603
MIAMI, FLORIDA 33130-1563
(305) 375-2901 FAX (305) 375-2908

NOTICE OF ACCEPTANCE (NOA)

PGT Industries
1070 Technology Drive
Nokomis, FL 34274

SCOPE:

This NOA is being issued under the applicable rules and regulations governing the use of construction materials. The documentation submitted has been reviewed by Miami-Dade County Product Control Division and accepted by the Board of Rules and Appeals (BORA) to be used in Miami Dade County and other areas where allowed by the Authority Having Jurisdiction (AHJ).

This NOA shall not be valid after the expiration date stated below. The Miami-Dade County Product Control Division (In Miami Dade County) and/or the AHJ (in areas other than Miami Dade County) reserve the right to have this product or material tested for quality assurance purposes. If this product or material fails to perform in the accepted manner, the manufacturer will incur the expense of such testing and the AHJ may immediately revoke, modify, or suspend the use of such product or material within their jurisdiction. BORA reserves the right to revoke this acceptance, if it is determined by Miami-Dade County Product Control Division that this product or material fails to meet the requirements of the applicable building code.

This product is approved as described herein, and has been designed to comply with the High Velocity Hurricane Zone of the Florida Building Code.

DESCRIPTION: Series C-740 Aluminum Casement Window - Impact

APPROVAL DOCUMENT: Drawing No. **7045-8,** titled "Aluminum Casement Window, Impact", sheets 1 through 12 of 12, dated 12/17/02 with revision C dated 7/10/03, prepared by manufacturer, signed and sealed by Lucas A. Turner, P.E., bearing the Miami-Dade County Product Control Revision stamp with the Notice of Acceptance number and expiration date by the Miami-Dade County Product Control Division.

MISSILE IMPACT RATING: Large and Small Missile Impact

LABELING: Each unit shall bear a permanent label with the manufacturer's name or logo, city, state and following statement: "Miami-Dade County Product Control Approved", unless otherwise noted herein.

RENEWAL of this NOA shall be considered after a renewal application has been filed and there has been no change in the applicable building code negatively affecting the performance of this product.

TERMINATION of this NOA will occur after the expiration date or if there has been a revision or change in the materials, use, and/or manufacture of the product or process. Misuse of this NOA as an endorsement of any product, for sales, advertising or any other purposes shall automatically terminate this NOA. Failure to comply with any section of this NOA shall be cause for termination and removal of NOA.

ADVERTISEMENT: The NOA number preceded by the words Miami-Dade County, Florida, and followed by the expiration date may be displayed in advertising literature. If any portion of the NOA is displayed, then it shall be done in its entirety.

INSPECTION: A copy of this entire NOA shall be provided to the user by the manufacturer or its distributors and shall be available for inspection at the job site at the request of the Building Official.

This NOA **revises NOA # 02-1224.02** consists of this page 1 and evidence pages E-1 and E-2, as well as approval document mentioned above.

The submitted documentation was reviewed by **Manuel Perez, P.E.**

PRODUCT CONTROL ACCEPTED

PGT Industries

NOTICE OF ACCEPTANCE: EVIDENCE SUBMITTED

A. DRAWINGS

1. Manufacturer's die drawings and sections.
2. Drawing No. **7045-8,** titled "Aluminum Casement Window, Impact", sheets 1 through 12 of 12, dated 12/17/02 with revision C dated 7/10/03, prepared by manufacturer, signed and sealed by Lucas Turner, P.E.

B. TESTS

1. Test reports on 1) Uniform Static Air Pressure Test, Loading per FBC, TAS 202-94
   2) Large Missile Impact Test per FBC, TAS 201-94
   3) Cyclic Wind Pressure Loading per FBC, TAS 203-94

   along with marked-up drawings and installation diagram of two outswing aluminum casement windows XOX configuration, prepared by Fenestration Testing Laboratory, Test Report No. **FTL 3729** dated 2/28/03, signed and sealed by Joseph Chan, P.E.

   Submitted under NOA# 02-1224.02
2. Test reports on 1) Air Infiltration Test, per FBC, TAS 202-94
   2) Uniform Static Air Pressure Test, Loading per FBC,TAS 202-94
   3) Water Resistance Test, per FBC, TAS 202-94
   4) Large Missile Impact Test per FBC, TAS 201-94
   5) Cyclic Wind Pressure Loading per FBC, TAS 203-94
   6) Forced Entry Test, per FBC 2411 3.2.1 and TAS 202-94

   along with marked-up drawings and installation diagram of two outswing aluminum casement windows XOX configuration, prepared by Fenestration Testing Laboratory, Test Report No. **FTL 3587** dated 10/8/02, signed and sealed by Joseph Chan, P.E.
3. Test reports on 1) Air Infiltration Test, per FBC, TAS 202-94
   2) Uniform Static Air Pressure Test, Loading per FBC,TAS 202-94
   3) Water Resistance Test, per FBC, TAS 202-94
   4) Large Missile Impact Test per FBC, TAS 201-94
   5) Cyclic Wind Pressure Loading per FBC, TAS 203-94
   6) Forced Entry Test, per FBC 2411 3.2.1 and TAS 202-94

   along with marked-up drawings and installation diagram of one outswing aluminum casement window, XOX configuration, prepared by Fenestration Testing Laboratory, Test Report No. **FTL 3582** dated 10/3/02, signed and sealed by Joseph Chan, P.E.

Manuel Perez, P.E.
Product Control Examiner
NOA No 03-0611.02
Expiration Date: May 22, 2008
Approval Date: October 9, 2003

NOTICE OF ACCEPTANCE: EVIDENCE SUBMITTED

4. Test reports on 1) Air Infiltration Test, per FBC, TAS 202-94
   2) Uniform Static Air Pressure Test, Loading per FBC,TAS 202-94
   3) Water Resistance Test, per FBC, TAS 202-94
   4) Large Missile Impact Test per FBC, TAS 201-94
   5) Cyclic Wind Pressure Loading per FBC, TAS 203-94
   6) Forced Entry Test, per FBC 2411 3.2.1 and TAS 202-94

   along with marked-up drawings and installation diagram of three aluminum outswing casement windows, OXO configuration, prepared by Fenestration Testing Laboratory, Test Report No. **FTL 3580** dated 10/3/02, signed and sealed by Joseph Chan, P.E.

C. CALCULATIONS

1. ASTM-E-1300 Table, dated 6/6/03, prepared, signed and sealed by Lucas Turner, P.E. Complies with ASTM E1300-98.
   Submitted under NOA# 02-1224.02
2. Anchor Calculations and structural analysis, prepared by manufacturer, dated 3/20/03, signed and sealed by Robert L. Clark, P.E.
3. Revised Anchor Calculations and structural analysis, prepared by manufacturer, dated 3/20/03, signed and sealed by Robert L. Clark, P.E.

D. QUALITY ASSURANCE

1. Miami Dade Building Code Compliance Office (BCCO).

E. MATERIAL CERTIFICATIONS

Submitted under NOA# 02-1224.02

1. Notice of Acceptance No. **01-0205.02** issued to Solutia, Inc. for "Saflex/Keepsafe Maximum" dated 5/17/01, expiring on 5/21/06.
2. Notice of Acceptance No. **00-1212.04** issued to E.I. DeNemours for "Dupont Butacite ® PVB" dated 2/15/01, expiring on 12/11/05.

F. STATEMENTS

1. Statement letter of conformance, dated 12/19/02, signed and sealed by Robert L. Clark, P.E.
2. Statement letter of no financial interest, dated 12/19/02, signed and sealed by Robert L. Clark, P.E.
3. Laboratory compliance letter for Test Report no. FTL 02134, 02129, 02124, issued by Fenestration Testing Laboratory, dated 11/15/02, signed and sealed by Joseph Chan, P.E.
4. Letter from engineer requesting a revision to include insulated glass, dated 6/6/03, signed and sealed by Lucas A. Turner, P.E.

G. OTHER

1. Notice of Acceptance No. **02-1224.02**, issued to PGT Industries, Series "640" Aluminum Casement Window, approved on 5/22/03 and expiring on 5/22/08.

Manuel Perez, P.E.
Product Control Examiner
NOA No 03-0611.02
Expiration Date: May 22, 2008
Approval Date: October 9, 2003

NOTES: LARGE MISSILE WINDOWS

1. GLAZING OPTIONS:
   A. 5/16" LAMINATED GLASS COMPRISED OF (1) LITE OF 1/8" ANNEALED GLASS AND (1) LITE OF 1/8" HEAT STRENGTHENED GLASS W/ AN .090 INNER LAYER OF SOLUTIA OR DUPONT PVB.
   B. 5/16" LAMINATED GLASS COMPRISED OF (2) LITES OF 1/8" HEAT STRENGTHENED GLASS W/ AN .090 INNER LAYER OF SOLUTIA OR DUPONT PVB.
   C. 7/16" LAMINATED GLASS COMPRISED OF (1) LITE OF 3/16" ANNEALED GLASS AND (1) LITE OF 3/16" HEAT STRENGTHENED GLASS W/ AN .090 INNER LAYER OF SOLUTIA OR DUPONT PVB.
   D. 7/16" LAMINATED GLASS COMPRISED OF (2) LITES OF 3/16" HEAT STRENGTHENED GLASS W/ AN .090 INNER LAYER OF SOLUTIA OR DUPONT PVB.
   E. 13/16" I.G. GLASS COMPRISED OF (1) LITE OF 1/8" HEAT STRENGTHENED GLASS AND (1) 5/16" LAMINATED COMPONENT WITH A 3/8" AIR SPACE. 5/16" LAMINATED GLASS COMPRISED OF (2) LITES OF 1/8" HEAT STRENGTHENED GLASS WITH AN .090 SOLUTIA OR DUPONT INNER LAYER.
2. CONFIGURATIONS: X, XX, XO, OX, XOX, O
3. DESIGN PRESSURE RATINGS / COMPARATIVE ANALYSIS TABLES:
   A. NEGATIVE DESIGN LOADS BASED ON TESTED PRESSURE AND GLASS TABLES ASTM E 1300-98 (AND ASTM E 1300-94 OUTSIDE MIAMI-DADE COUNTY).
   B. POSITIVE DESIGN LOADS BASED ON WATER TEST PRESSURE AND GLASS TABLES ASTM E 1300-98 (AND ASTM E 1300-94 OUTSIDE MIAMI-DADE COUNTY).
   C. DESIGN PRESSURES UNDER 40 P.S.F. NOT APPLICABLE IN MIAMI-DADE COUNTY.
   D. FOR "X" CONFIGURATIONS SEE SHEET 4.
   E. FOR "XX" CONFIGURATIONS SEE SHEET 4.
   F. FOR $\frac{1}{4}$-$\frac{1}{2}$-$\frac{1}{4}$ "XOX" & "O" CONFIGURATIONS SEE SHEET 5.
   G. FOR $\frac{1}{3}$-$\frac{1}{3}$-$\frac{1}{3}$ "XOX" & "XO" OR "OX" CONFIGURATIONS SEE SHEET 6.
   H. FOR UNEQUAL LITE "XOX, "XO" & "OX" CONFIGURATIONS SEE SHEET 7.
4. ANCHORAGE: SINGLE ROW OF FASTENERS LOCATED AS FOLLOWS:

   HEAD & SILL: MAX. 4" FROM CORNERS
   MAX. 4" & 7" ON EACH SIDE OF MEETING RAILS
   MAX. 14 1/2" SPACING ON VENTS
   MAX. 13" SPACING ON FIXED LITES
   (2) ANCHORS 3" APART AT MID-SPAN ON FIXED LITE ONLY

   JAMBS: MAX. 4" FROM CORNERS
   MAX. 13" SPACING
   (2) ANCHORS 3" APART AT MID-SPAN

   NOTE: 1/4" TAPCONS OR #14 SCREWS MAY BE USED AT THE ABOVE SPACING. SEE SHEETS 4, 5, 6 AND 7 FOR ALLOWABLE DESIGN PRESSURES IF USING 3/16" TAPCONS OR #12 SCREWS.
5. SHUTTER REQUIREMENT: NONE REQUIRED
6. NARROW JOINT SEALANT IS USED ON ALL FOUR CORNERS OF THE FRAME.
7. REFERENCE TEST REPORTS: FTL-3580, FTL-3582, FTL-3587 AND FTL-3729

CONFIGURATIONS OPTIONS

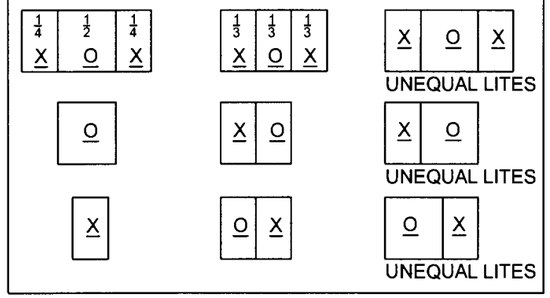

NOA DRAWING TABLE OF CONTENTS

	SHEET
NOTES	1
GLAZING DETAILS	2
ELEVATIONS	3-4
DESIGN PRESSURE TABLES	5-8
SECTIONS	9
CORNER CONSTRUCTION	10
EXTRUSION PROFILES	10-11
PARTS LIST	11
ANCHORAGE	12

PRODUCT REVISED
as complying with the Florida
Buiding Code
Acceptance No. 03-0611.02
Expiration Date MAY 22, 2008
By Miami Dade Product Control
Division

L G I
7/10/03

Lucas A. Turner, P.E.
PE #58201
Mechanical

Revsd By:	Date:	Revisions:	
F.K.	3/17/03	A	REVISE ANCHORAGE NOTE 4
F.K.	3/25/03	B	ADD 13/16" I.G. & MOVE GLAZING DETAILS TO SHEET 2
		C	NO CHANGE THIS SHEET
Drawn By: F.K.	Date: 12/17/02	Checked By:	Date:

1070 TECHNOLOGY DRIVE
NOKOMIS, FL 34275

P.O. BOX 1529
NOKOMIS, FL 34274

PGT
Visibly Better

Description: NOTES AND TABLE OF CONTENTS

Title: ALUMINUM CASEMENT WINDOW, IMPACT

Series/Model:	Scale:	Sheet:	Drawing No.	Rev:
CA-740	NTS	1 of 12	7045-8	C

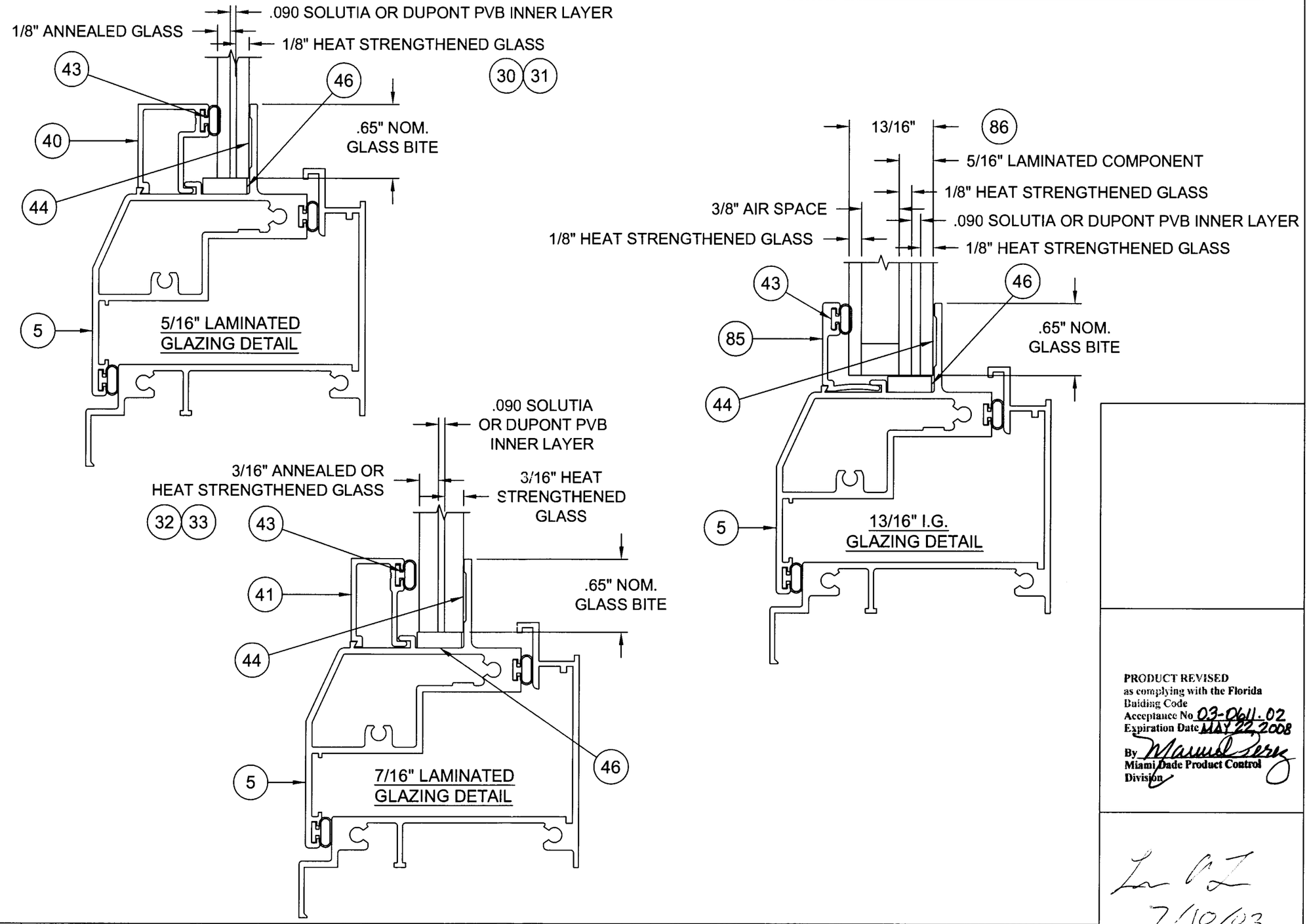

PRODUCT REVISED
as complying with the Florida
Building Code
Acceptance No 03-0611.02
Expiration Date MAY 22, 2008
By Miami Dade Product Control
Division

7/10/03

Revsd By:	Date:	Revisions:	
F.K.	3/25/03	B	REDRAW GLAZING DETAILS & ADD 13/16" I.G.
F.K.	7/10/03	C	NO CHANGE THIS SHEET
Revsd By:	Date:	Revisions:	
Drawn By: F.K.	Date: 03/25/03	Checked By:	Date:

1070 TECHNOLOGY DRIVE
NOKOMIS, FL 34275

P.O. BOX 1529
NOKOMIS, FL 34274

PGT
Visibly Better

Description: GLAZING DETAILS

Title: ALUMINUM CASEMENT WINDOW, IMPACT

Series/Model:	Scale:	Sheet:	Drawing No.	Rev:
CA-745	NTS	2 of 12	7045-8	C

Lucas A. Turner, P.E.
PE #58201
Mechanical

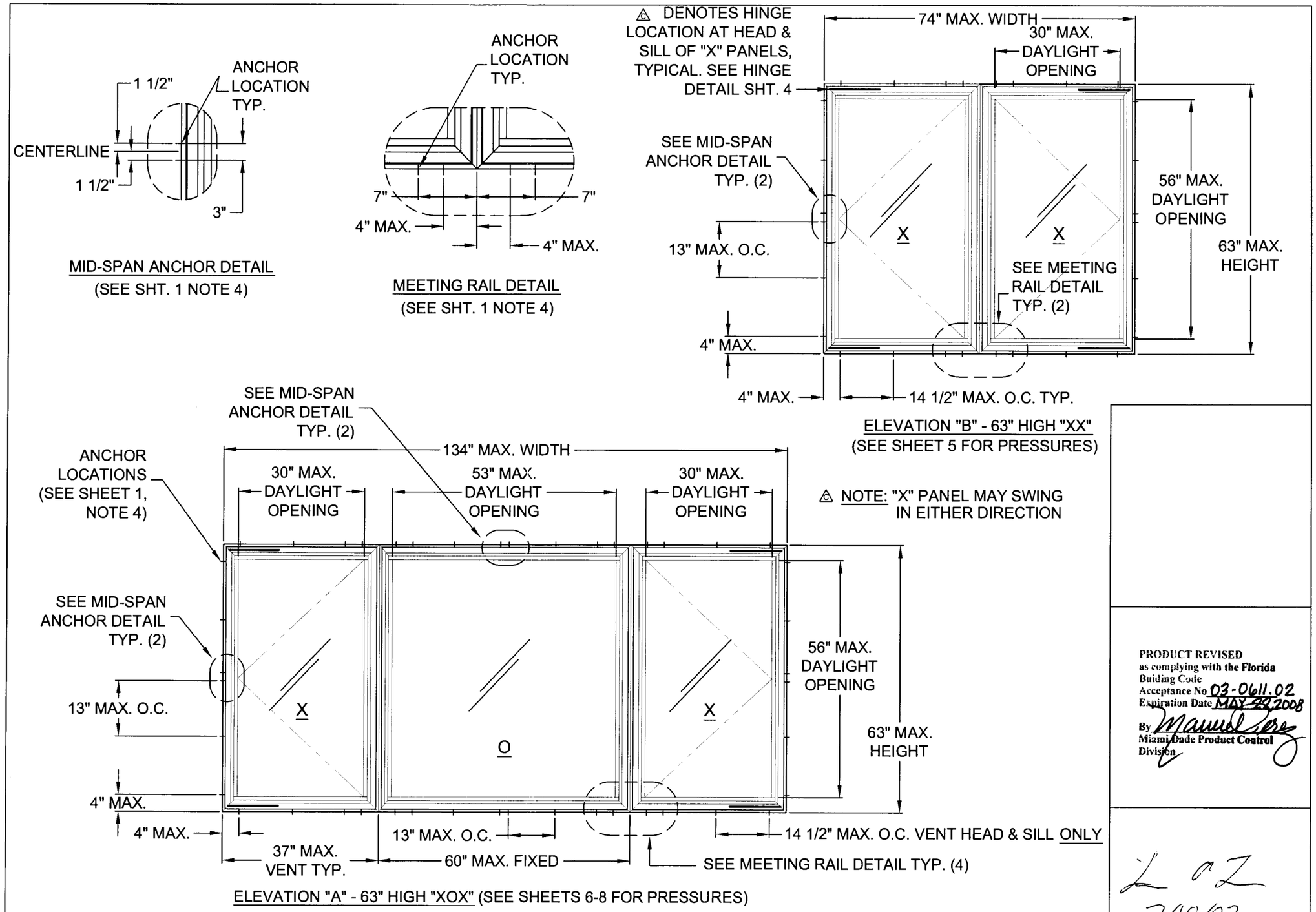

PRODUCT REVISED
as complying with the Florida Buiding Code
Acceptance No 03-0611.02
Expiration Date MAY 22, 2008
By Manuel Perez
Miami Dade Product Control Division

L A Z
7/10/03

Revsd By:	Date:	Revisions:	
F.K.	3/17/03	A	REVISE ANCHORAGE
F.K.	3/25/03	B	CHANGE SHEET NO. REFERENCES
F.K.	7/10/03	C	ADD HINGE LOCATION DETAILS
Drawn By: F.K.	Date: 12/17/02	Checked By:	Date:

1070 TECHNOLOGY DRIVE
NOKOMIS, FL 34275

P.O. BOX 1529
NOKOMIS, FL 34274

PGT
Visibly Better

Description: "XX" & "XOX" ELEVATIONS

Title: ALUMINUM CASEMENT WINDOW, IMPACT

Series/Model:	Scale:	Sheet:	Drawing No.	Rev:
CA-740	NTS	3 of 12	7045-8	C

Lucas A. Turner, P.E.
PE #58201
Mechanical

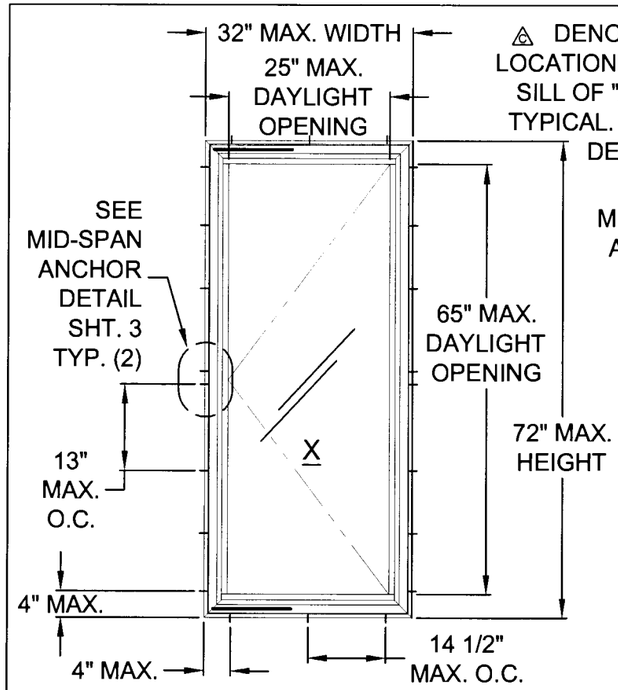

ELEVATION "C" - 72 HIGH "X"
(SEE SHEET 5 FOR PRESSURES)

NOTE: 72" HEIGHT AVAILABLE WITH SINGLE VENT CONFIGURATION ONLY

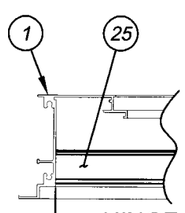

HINGE LOCATED APPROX. FLUSH AGAINST JAM, TYPICAL HEAD & SILL

HINGE LOCATION DETAIL

△6 DENOTES HINGE LOCATION AT HEAD & SILL OF "X" PANELS, TYPICAL. SEE HINGE DETAIL SHT. 4

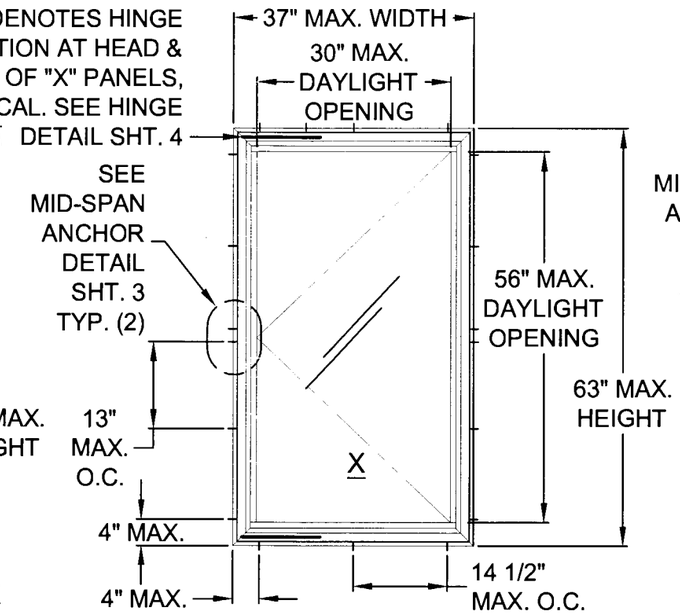

ELEVATION "D" - 63" HIGH "X"
(SEE SHEET 5 FOR PRESSURES)

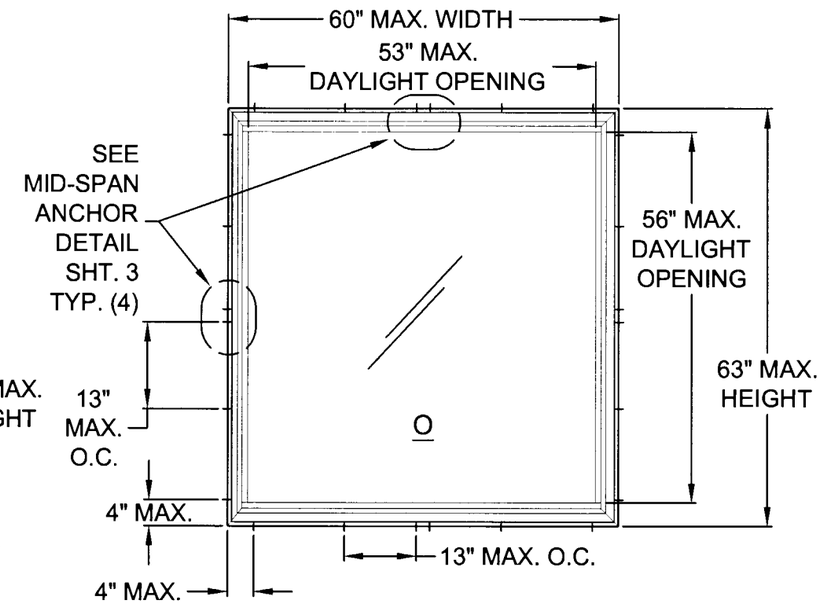

ELEVATION "E" - 63" HIGH "O"
(SEE SHEET 6 FOR PRESSURES)

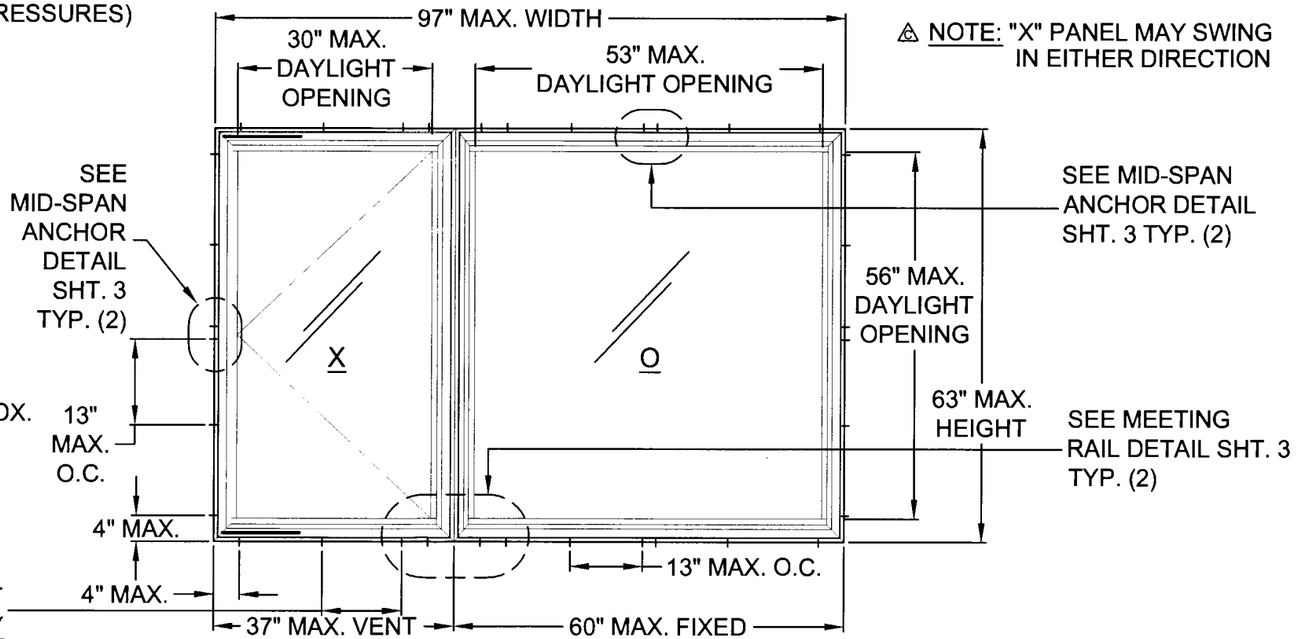

△6 NOTE: "X" PANEL MAY SWING IN EITHER DIRECTION

ELEVATION "F" - 63" HIGH "XO" & "OX" UNEQUAL LITE (SEE SHEETS 7-8 FOR PRESSURES)

PRODUCT REVISED
as complying with the Florida Building Code
Acceptance No. 03-0611.02
Expiration Date MAY 22, 2008
By Manuel Perez
Miami-Dade Product Control Division

L. A. T.
7/10/03

Lucas A. Turner, P.E.
PE #58201
Mechanical

Revsd By:	Date:	Revisions:	
F.K.	3/17/03	A	REVISE ANCHORAGE
F.K.	3/25/03	B	CHANGE SHEET NO. REFERENCES
F.K.	7/10/03	C	ADD HINGE DETAIL & HINGE LOCATION NOTES
Drawn By: F.K.	Date: 12/17/02	Checked By: F.K.	Date:

1070 TECHNOLOGY DRIVE
NOKOMIS, FL 34275

P.O. BOX 1529
NOKOMIS, FL 34274

PGT Visibly Better

Description: "X", "O", "XO" & "OX" ELEVATIONS

Title: ALUMINUM CASEMENT WINDOW, IMPACT

Series/Model:	Scale:	Sheet:	Drawing No.	Rev:
CA-740	NTS	4 of 12	7045-8	C

COMPARATIVE ANALYSIS TABLE 1. (BASED ON 1/4" TAPCONS OR #14 SCREWS) "X" WINDOWS TEST REPORTS: FTL-3582, FTL-3587, FTL-3729

GLAZING OPTIONS: A. 5/16" LAMI (1/8"A,.090,1/8"HS) B. 5/16" LAMI (1/8"HS,.090,1/8"HS) E. 13/16" LAMI (1/8"HS,3/8" SPACE,5/16" LAMI-W/ 1/8"HS,.090,1/8"HS)

"X" WIDTH		HEIGHT																											
		26.000		31.000		36.000		38.375		43.000		48.000		50.625		54.000		57.000		60.000		63.000		66.000		69.000		72.000	
		NEG	POS	NEG	POS	NEG	POS	NEG	POS	NEG	POS	NEG	POS	NEG	POS	NEG	POS	NEG	POS	NEG	POS	NEG	POS	NEG	POS	NEG	POS	NEG	POS
19.125	A	-90.0	70.0	-90.0	70.0	-90.0	70.0	-90.0	70.0	-90.0	70.0	-90.0	70.0	-90.0	70.0	-90.0	70.0	-90.0	70.0	-90.0	70.0	-90.0	70.0	-90.0	70.0	-90.0	70.0	-90.0	70.0
	B,E	-90.0	70.0	-90.0	70.0	-90.0	70.0	-90.0	70.0	-90.0	70.0	-90.0	70.0	-90.0	70.0	-90.0	70.0	-90.0	70.0	-90.0	70.0	-90.0	70.0	-90.0	70.0	-90.0	70.0	-90.0	70.0
24.000	A	-90.0	70.0	-90.0	70.0	-90.0	70.0	-90.0	70.0	-90.0	70.0	-90.0	70.0	-90.0	70.0	-90.0	70.0	-90.0	70.0	-89.6	70.0	-86.3	70.0	-84.2	70.0	-83.2	70.0	-81.7	70.0
	B,E	-90.0	70.0	-90.0	70.0	-90.0	70.0	-90.0	70.0	-90.0	70.0	-90.0	70.0	-90.0	70.0	-90.0	70.0	-90.0	70.0	-90.0	70.0	-90.0	70.0	-90.0	70.0	-90.0	70.0	-90.0	70.0
26.500	A	-90.0	70.0	-90.0	70.0	-90.0	70.0	-90.0	70.0	-90.0	70.0	-83.6	70.0	-79.9	70.0	-75.4	70.0	-72.4	70.0	-69.9	69.9	-67.8	67.8	-66.2	66.2	-65.0	65.0	-63.7	63.7
	B,E	-90.0	70.0	-90.0	70.0	-90.0	70.0	-90.0	70.0	-90.0	70.0	-90.0	70.0	-90.0	70.0	-90.0	70.0	-90.0	70.0	-90.0	70.0	-90.0	70.0	-90.0	70.0	-90.0	70.0	-90.0	70.0
30.000	A	-90.0	70.0	-90.0	70.0	-90.0	70.0	-87.4	70.0	-77.6	70.0	-68.4	68.4	-63.9	63.9	-60.0	60.0	-58.5	58.5	-56.2	56.2	-53.4	53.4	-51.3	51.3	-49.8	49.8	-48.3	48.3
	B,E	-90.0	70.0	-90.0	70.0	-90.0	70.0	-90.0	70.0	-90.0	70.0	-90.0	70.0	-90.0	70.0	-90.0	70.0	-90.0	70.0	-90.0	70.0	-90.0	70.0	-90.0	70.0	-90.0	70.0	-90.0	70.0
32.000	A	-90.0	70.0	-90.0	70.0	-86.3	70.0	-81.0	70.0	-71.1	70.0	-61.8	61.8	-58.9	58.9	-56.1	56.1	-53.8	53.8	-50.4	50.4	-47.7	47.7	-45.6	45.6	-43.9	43.9	-42.2	42.2
	B,E	-90.0	70.0	-90.0	70.0	-90.0	70.0	-90.0	70.0	-90.0	70.0	-90.0	70.0	-90.0	70.0	-90.0	70.0	-90.0	70.0	-90.0	70.0	-90.0	70.0	-90.0	70.0	-87.8	70.0	-84.4	70.0
34.000	A	-75.0	70.0	-75.0	70.0	-75.0	70.0	-75.0	70.0	-65.5	65.5	-57.5	57.5	-54.9	54.9	-51.8	51.8	-48.6	48.6	-45.2	45.2	-42.4	42.4						
	B,E	-75.0	70.0	-75.0	70.0	-75.0	70.0	-75.0	70.0	-75.0	70.0	-75.0	70.0	-75.0	70.0	-75.0	70.0	-75.0	70.0	-75.0	70.0	-75.0	70.0						
36.000	A	-75.0	70.0	-75.0	70.0	-75.0	70.0	-70.4	70.0	-60.4	60.4	-54.3	54.3	-51.1	51.1	-47.9	47.9	-44.8	44.8	-42.2	42.2	-39.7	39.7						
	B,E	-75.0	70.0	-75.0	70.0	-75.0	70.0	-75.0	70.0	-75.0	70.0	-75.0	70.0	-75.0	70.0	-75.0	70.0	-75.0	70.0	-75.0	70.0	-75.0	70.0						
37.000	A	-75.0	70.0	-75.0	70.0	-73.7	70.0	-67.9	67.9	-59.0	59.0	-52.8	52.8	-49.9	49.9	-46.4	46.4	-43.5	43.5	-41.1	41.1	-38.6	38.6						
	B,E	-75.0	70.0	-75.0	70.0	-75.0	70.0	-75.0	70.0	-75.0	70.0	-75.0	70.0	-75.0	70.0	-75.0	70.0	-75.0	70.0	-75.0	70.0	-75.0	70.0						

TABLE 2.(BASED ON 1/4" TAPCONS OR #14 SCREWS) "X" WINDOWS TEST REPORTS: FTL-3580, FTL-3587

GLAZING OPTION: C. 7/16" LAMI (3/16"A,.090,3/16"HS)

ALL "X" SIZES UP TO 37.000" WIDE x 63.000" HIGH AND ALL "X" SIZES UP TO 32.000" WIDE x 72.000" HIGH | -90.0 | 70.0 |

COMPARATIVE ANALYSIS TABLE 3.(BASED ON 1/4" TAPCONS OR #14 SCREWS) "XX" WINDOWS TEST REPORTS: FTL-3582

GLAZING OPTION: A. 5/16" LAMI (1/8"A,.090,1/8"HS)

"XX" WIDTH		HEIGHT																					
		26.000		31.000		36.000		38.375		43.000		48.000		50.625		54.000		57.000		60.000		63.000	
		NEG	POS	NEG	POS	NEG	POS	NEG	POS	NEG	POS	NEG	POS	NEG	POS	NEG	POS	NEG	POS	NEG	POS	NEG	POS
37.000	A	-75.0	70.0	-75.0	70.0	-75.0	70.0	-75.0	70.0	-75.0	70.0	-75.0	70.0	-75.0	70.0	-75.0	70.0	-75.0	70.0	-75.0	70.0	-75.0	70.0
43.000	A	-75.0	70.0	-75.0	70.0	-75.0	70.0	-75.0	70.0	-75.0	70.0	-75.0	70.0	-75.0	70.0	-75.0	70.0	-75.0	70.0	-75.0	70.0	-75.0	70.0
48.000	A	-75.0	70.0	-75.0	70.0	-75.0	70.0	-75.0	70.0	-75.0	70.0	-75.0	70.0	-75.0	70.0	-75.0	70.0	-75.0	70.0	-75.0	70.0	-75.0	70.0
53.125	A	-75.0	70.0	-75.0	70.0	-75.0	70.0	-75.0	70.0	-75.0	70.0	-75.0	70.0	-75.0	70.0	-75.0	70.0	-72.1	70.0	-69.5	69.5	-67.5	67.5
57.000	A	-75.0	70.0	-75.0	70.0	-75.0	70.0	-75.0	70.0	-75.0	70.0	-74.4	70.0	-69.6	69.6	-65.2	65.2	-63.0	63.0	-60.8	60.8	-58.0	58.0
60.000	A	-75.0	70.0	-75.0	70.0	-75.0	70.0	-75.0	70.0	-75.0	70.0	-68.4	68.4	-63.9	63.9	-60.0	60.0	-58.5	58.5	-56.2	56.2	-53.4	53.4
64.000	A	-75.0	70.0	-75.0	70.0	-75.0	70.0	-75.0	70.0	-71.1	70.0	-61.8	61.8	-58.9	58.9	-56.1	56.1	-53.8	53.8	-50.4	50.4	-47.7	47.7
68.000	A	-75.0	70.0	-75.0	70.0	-75.0	70.0	-75.0	70.0	-65.5	65.5	-57.5	57.5	-54.9	54.9	-51.8	51.8	-48.6	48.6	-45.2	45.2	-42.4	42.4
72.000	A	-75.0	70.0	-75.0	70.0	-75.0	70.0	-70.4	70.0	-60.4	60.4	-54.3	54.3	-51.1	51.1	-47.9	47.9	-44.8	44.8	-42.2	42.2	-39.7	39.7
74.000	A	-75.0	70.0	-75.0	70.0	-73.7	70.0	-67.9	67.9	-59.0	59.0	-52.8	52.8	-49.9	49.9	-46.4	46.4	-43.5	43.5	-41.1	41.1	-38.6	38.6

TABLE 4.(BASED ON 1/4" TAPCONS OR #14 SCREWS) "XX" WINDOWS TEST REPORTS: FTL-3582, FTL-3729

GLAZING OPTION: B. 5/16" LAMI (1/8"HS,.090,1/8"HS) E. 13/16" LAMI (1/8"HS,3/8" SPACE,5/16" LAMI-W/ 1/8"HS,.090,1/8"HS)

ALL "XX" SIZES UP TO 74.000" WIDE x 63.000" HIGH | -75.0 | 70.0 |

TABLE 5.(BASED ON 1/4" TAPCONS OR #14 SCREWS) "XX" WINDOWS TEST REPORT: FTL-3580

GLAZING OPTION: C. 7/16" LAMI (3/16"A,.090,3/16"HS)

ALL "XX" SIZES UP TO 74.000" WIDE x 63.000" HIGH | -90.0 | 70.0 |

NOTE: IF USING 3/16" TAPCONS OR #12 SCREWS DESIGN PRESSURE FOR "XX" WINDOWS IS LIMITED TO 46.7 P.S.F

PRODUCT REVISED
as complying with the Florida Building Code
Acceptance No. 03-0611.02
Expiration Date MAY 22, 2008
By Manuel Perez
Miami-Dade Product Control Division

L A T
7/10/03

Revsd By:	Date:	Revisions:	
F.K.	3/17/03	A	REVISE TABLES 1 AND 3, GLASS TYPE A
F.K.	3/25/03	B	ADD GLASS TYPE E TO TABLES 1 & 4
F.K.	7/10/03	C	NO CHANGE THIS SHEET
Drawn By: F.K.	Date: 12/17/02	Checked By:	Date:

1070 TECHNOLOGY DRIVE
NOKOMIS, FL 34275

P.O. BOX 1529
NOKOMIS, FL 34274

PGT Visibly Better

Description: PRESSURES- X & XX CONFIG. WINDOWS

Title: ALUMINUM CASEMENT WINDOW, IMPACT

Series/Model:	Scale:	Sheet:	Drawing No.	Rev:
CA-740	NTS	5 of 12	7045-8	C

Lucas A. Turner, P.E.
PE #58201
Mechanical

COMPARATIVE ANALYSIS TABLE 6. (BASED ON 1/4" TAPCONS OR #14 SCREWS) "O" & "1/4-1/2-1/4 XOX" WINDOWS TEST REPORTS: FTL-3582, FTL-3582, FTL-3729

GLAZING OPTIONS: A. 5/16" LAMI (1/8"A,.090,1/8"HS) B. 5/16" LAMI (1/8"HS,.090,1/8"HS) C. 7/16" LAMI (3/16"A,.090,3/16"HS) E. 13/16" LAMI (1/8"HS,3/8" SPACE,5/16" LAMI-W/ 1/8"HS,.090,1/8"HS)

"O" WIDTH	"XOX" WIDTH		HEIGHT 26.000		31.000		36.000		38.375		43.000		48.000		50.625		54.000		57.000		60.000		63.000	
			NEG	POS	NEG	POS	NEG	POS	NEG	POS	NEG	POS	NEG	POS	NEG	POS	NEG	POS	NEG	POS	NEG	POS	NEG	POS
36.000	72.000	A	-75.0	70.0	-75.0	70.0	-75.0	70.0	-70.4	70.0	-60.4	60.4	-54.3	54.3	-51.1	51.1	-47.9	47.9	-44.8	44.8	-42.2	42.2	-39.7	39.7
		B,E	-75.0	70.0	-75.0	70.0	-75.0	70.0	-75.0	70.0	-75.0	70.0	-75.0	70.0	-75.0	70.0	-75.0	70.0	-75.0	70.0	-75.0	70.0	-75.0	70.0
		C	-90.0	70.0	-90.0	70.0	-90.0	70.0	-90.0	70.0	-90.0	70.0	-90.0	70.0	-90.0	70.0	-90.0	70.0	-90.0	70.0	-90.0	70.0	-90.0	70.0
37.000	74.000	A	-75.0	70.0	-75.0	70.0	-73.7	70.0	-67.9	67.9	-59.0	59.0	-52.8	52.8	-49.9	49.9	-46.4	46.4	-43.5	43.5	-41.1	41.1	-38.6	38.6
		B,E	-75.0	70.0	-75.0	70.0	-75.0	70.0	-75.0	70.0	-75.0	70.0	-75.0	70.0	-75.0	70.0	-75.0	70.0	-75.0	70.0	-75.0	70.0	-75.0	70.0
		C	-90.0	70.0	-90.0	70.0	-90.0	70.0	-90.0	70.0	-90.0	70.0	-90.0	70.0	-90.0	70.0	-90.0	70.0	-90.0	70.0	-90.0	70.0	-90.0	70.0
39.500	79.000	A	-75.0	70.0	-75.0	70.0	-67.8	67.8	-62.1	62.1	-55.7	55.7	-49.8	49.8	-46.9	46.9	-43.6	43.6	-41.1	41.1	-38.6	38.6	-36.5	36.5
		B,E	-75.0	70.0	-75.0	70.0	-75.0	70.0	-75.0	70.0	-75.0	70.0	-75.0	70.0	-75.0	70.0	-75.0	70.0	-75.0	70.0	-75.0	70.0	-75.0	70.0
		C	-90.0	70.0	-90.0	70.0	-90.0	70.0	-90.0	70.0	-90.0	70.0	-90.0	70.0	-90.0	70.0	-90.0	70.0	-90.0	70.0	-87.4	70.0	-83.2	70.0
42.000	84.000	A	-75.0	70.0	-75.0	70.0	-62.4	62.4	-58.4	58.4	-63.3	63.3	-56.4	56.4	-53.4	53.4	-50.0	50.0	-46.9	46.9	-44.3	44.3	-41.9	41.9
		B,E	-75.0	70.0	-75.0	70.0	-75.0	70.0	-75.0	70.0	-75.0	70.0	-75.0	70.0	-75.0	70.0	-75.0	70.0	-75.0	70.0	-75.0	70.0	-75.0	70.0
		C	-90.0	70.0	-90.0	70.0	-90.0	70.0	-90.0	70.0	-90.0	70.0	-90.0	70.0	-90.0	70.0	-90.0	70.0	-84.5	70.0	-79.7	70.0	-75.6	70.0
45.000	90.000	A	-75.0	70.0	-70.3	70.0	-58.0	58.0	-54.6	54.6	-59.3	59.3	-53.6	53.6	-50.9	50.9	-47.5	47.5	-44.7	44.7	-42.1	42.1	-39.7	39.7
		B,E	-75.0	70.0	-75.0	70.0	-75.0	70.0	-75.0	70.0	-75.0	70.0	-75.0	70.0	-75.0	70.0	-75.0	70.0	-75.0	70.0	-75.0	70.0	-75.0	70.0
		C	-90.0	70.0	-90.0	70.0	-90.0	70.0	-90.0	70.0	-90.0	70.0	-90.0	70.0	-88.2	70.0	-81.8	70.0	-76.9	70.0	-72.4	70.0	-69.2	69.2
48.000	96.000	A	-75.0	70.0	-65.0	65.0	-54.3	54.3	-51.1	51.1	-55.1	55.1	-51.4	51.4	-48.6	48.6	-45.3	45.3	-42.5	42.5	-40.4	40.4	-38.4	38.4
		B,E	-75.0	70.0	-75.0	70.0	-75.0	70.0	-75.0	70.0	-75.0	70.0	-75.0	70.0	-75.0	70.0	-75.0	70.0	-75.0	70.0	-75.0	70.0	-75.0	70.0
		C	-90.0	70.0	-90.0	70.0	-90.0	70.0	-90.0	70.0	-90.0	70.0	-86.0	70.0	-80.9	70.0	-75.0	70.0	-70.7	70.0	-67.3	67.3	-64.1	64.1
50.500	101.000	A	-75.0	70.0	-60.8	60.8	-51.3	51.3	-48.3	48.3	-52.7	52.7	-48.7	48.7	-46.9	46.9	-43.5	43.5	-41.3	41.3	-39.2	39.2	-37.1	37.1
		B,E	-75.0	70.0	-75.0	70.0	-75.0	70.0	-75.0	70.0	-75.0	70.0	-75.0	70.0	-75.0	70.0	-75.0	70.0	-75.0	70.0	-75.0	70.0	-74.3	70.0
		C	-90.0	70.0	-90.0	70.0	-90.0	70.0	-90.0	70.0	-90.0	70.0	-81.2	70.0	-75.7	70.0	-70.3	70.0	-66.8	66.8	-63.5	63.5	-60.5	60.5
53.125	106.375	A	-75.0	70.0	-58.7	58.7	-48.7	48.7	-45.4	45.4	-50.0	50.0	-46.1	46.1	-44.2	44.2	-42.2	42.2	-40.1	40.1	-38.0	38.0	-36.2	36.2
		B,E	-75.0	70.0	-75.0	70.0	-75.0	70.0	-75.0	70.0	-75.0	70.0	-75.0	70.0	-75.0	70.0	-75.0	70.0	-75.0	70.0	-75.0	70.0	-72.4	70.0
		C	-90.0	70.0	-90.0	70.0	-90.0	70.0	-90.0	70.0	-88.6	70.0	-76.4	70.0	-71.1	70.0	-66.5	66.5	-63.0	63.0	-60.0	60.0	-57.3	57.3
54.000	108.000	A	-75.0	70.0	-58.2	58.2	-47.9	47.9	-44.5	44.5	-49.1	49.1	-45.3	45.3	-43.4	43.4	-41.9	41.9	-39.8	39.8	-37.6	37.6	-35.9	35.9
		B,E	-75.0	70.0	-75.0	70.0	-75.0	70.0	-75.0	70.0	-75.0	70.0	-75.0	70.0	-75.0	70.0	-75.0	70.0	-75.0	70.0	-75.0	70.0	-71.8	70.0
		C	-90.0	70.0	-90.0	70.0	-90.0	70.0	-90.0	70.0	-86.9	70.0	-75.0	70.0	-70.1	70.0	-65.4	65.4	-61.8	61.8	-59.1	59.1	-56.4	56.4
55.500	111.000	A	-75.0	70.0	-57.1	57.1	-46.4	46.4	-43.3	43.3	-47.5	47.5	-43.9	43.9	-42.2	42.2	-40.8	40.8	-39.1	39.1	-37.2	37.2	-35.4	35.4
		B,E	-75.0	70.0	-75.0	70.0	-75.0	70.0	-75.0	70.0	-75.0	70.0	-75.0	70.0	-75.0	70.0	-75.0	70.0	-75.0	70.0	-74.3	70.0	-70.8	70.0
		C	-90.0	70.0	-90.0	70.0	-90.0	70.0	-90.0	70.0	-84.3	70.0	-72.5	70.0	-68.4	68.4	-63.6	63.6	-60.1	60.1	-57.5	57.5	-54.8	54.8
57.000	114.000	A	-75.0	70.0	-56.2	56.2	-44.8	44.8	-42.1	42.1	-46.2	46.2	-42.5	42.5	-41.2	41.2	-39.8	39.8	-38.5	38.5	-36.7	36.7	-34.8	34.8
		B,E	-75.0	70.0	-75.0	70.0	-75.0	70.0	-75.0	70.0	-75.0	70.0	-75.0	70.0	-75.0	70.0	-75.0	70.0	-75.0	70.0	-73.3	70.0	-69.6	69.6
		C	-90.0	70.0	-90.0	70.0	-90.0	70.0	-90.0	70.0	-81.8	70.0	-70.7	70.0	-66.7	66.7	-61.8	61.8	-58.7	58.7	-55.9	55.9	-53.2	53.2
58.500	117.000	A	-74.2	70.0	-55.0	55.0	-43.4	43.4	-40.9	40.9	-44.8	44.8	-41.3	41.3	-40.2	40.2	-38.7	38.7	-37.6	37.6	-36.1	36.1	-34.2	34.2
		B,E	-75.0	70.0	-75.0	70.0	-75.0	70.0	-75.0	70.0	-75.0	70.0	-75.0	70.0	-75.0	70.0	-75.0	70.0	-75.0	70.0	-72.2	70.0	-68.4	68.4
		C	-90.0	70.0	-90.0	70.0	-90.0	70.0	-90.0	70.0	-79.4	70.0	-69.0	69.0	-64.9	64.9	-60.4	60.4	-57.3	57.3	-54.5	54.5	-51.6	51.6
60.000	120.000	A	-72.9	70.0	-53.4	53.4	-42.2	42.2	-39.7	39.7	-43.5	43.5	-40.4	40.4	-39.2	39.2	-37.6	37.6	-36.7	36.7	-35.5	35.5	-33.7	33.7
		B,E	-75.0	70.0	-75.0	70.0	-75.0	70.0	-75.0	70.0	-75.0	70.0	-75.0	70.0	-75.0	70.0	-75.0	70.0	-73.3	70.0	-71.0	70.0	-67.4	67.4
		C	-90.0	70.0	-90.0	70.0	-90.0	70.0	-90.0	70.0	-77.1	70.0	-67.3	67.3	-63.3	63.3	-59.1	59.1	-55.9	55.9	-53.0	53.0	-50.0	50.0

1/4	1/2	1/4
X	O	X

O

NOTE: IF USING 3/16" TAPCONS OR #12 SCREWS DESIGN PRESSURE FOR "O" WINDOWS IS LIMITED TO 52.1 P.S.F. DESIGN PRESSURE FOR "XOX" WINDOWS IS LIMITED TO 41.3 P.S.F.

TABLE 7.(BASED ON 1/4" TAPCONS OR #14 SCREWS) "O" & "1/4-1/2-1/4 XOX" WINDOWS TEST REPORT: FTL-3580

GLAZING OPTION: D. 7/16" LAMI (3/16"HS,.090,3/16"HS)

ALL "O" SIZES UP TO 60.000" WIDE x 63.000" HIGH AND ALL "XOX" SIZES UP TO 120.000" WIDE x 63.000" HIGH	-90.0	70.0

PRODUCT REVISED
as complying with the Florida Building Code
Acceptance No 03-0611.02
Expiration Date MAY 22, 2008
By Manuel Perez
Miami-Dade Product Control Division

7/10/03

Revsd By:	Date:	Revisions:	
F.K.	3/17/03	A	REVISE TABLE 6, GLASS TYPES A & C
F.K.	3/25/03	B	ADD GLASS TYPE E TO TABLE 6
F.K.	7/10/03	C	NO CHANGE THIS SHEET
Drawn By: F.K.	Date: 12/17/02	Checked By:	Date:

1070 TECHNOLOGY DRIVE
NOKOMIS, FL 34275
P.O. BOX 1529
NOKOMIS, FL 34274

PGT Visibly Better

Description: PRESSURES- O & 1/4-1/2-1/4 XOX CONFIG. WINDOWS

Title: ALUMINUM CASEMENT WINDOW, IMPACT

Series/Model:	Scale:	Sheet:	Drawing No.	Rev:
CA-740	NTS	6 of 12	7045-8	C

Lucas A. Turner, P.E.
PE #58201
Mechanical

COMPARATIVE ANALYSIS TABLE 8. (BASED ON 1/4" TAPCONS OR #14 SCREWS) "XO" OR "OX" & "1/3-1/3-1/3 XOX" WINDOWS TEST REPORT: FTL-3582

GLAZING OPTION: A. 5/16" LAMI (1/8"A,.090,1/8"HS)

"XO" WIDTH	"XOX" WIDTH		HEIGHT 26.000 NEG	26.000 POS	31.000 NEG	31.000 POS	36.000 NEG	36.000 POS	38.375 NEG	38.375 POS	43.000 NEG	43.000 POS	48.000 NEG	48.000 POS	50.625 NEG	50.625 POS	54.000 NEG	54.000 POS	57.000 NEG	57.000 POS	60.000 NEG	60.000 POS	63.000 NEG	63.000 POS
37.000	55.500	A	-75.0	70.0	-75.0	70.0	-75.0	70.0	-75.0	70.0	-75.0	70.0	-75.0	70.0	-75.0	70.0	-75.0	70.0	-75.0	70.0	-75.0	70.0	-75.0	70.0
48.000	72.000	A	-75.0	70.0	-75.0	70.0	-75.0	70.0	-75.0	70.0	-75.0	70.0	-75.0	70.0	-75.0	70.0	-75.0	70.0	-75.0	70.0	-75.0	70.0	-75.0	70.0
49.333	74.000	A	-75.0	70.0	-75.0	70.0	-75.0	70.0	-75.0	70.0	-75.0	70.0	-75.0	70.0	-75.0	70.0	-75.0	70.0	-75.0	70.0	-75.0	70.0	-75.0	70.0
53.125	79.688	A	-75.0	70.0	-75.0	70.0	-75.0	70.0	-75.0	70.0	-75.0	70.0	-75.0	70.0	-75.0	70.0	-75.0	70.0	-72.1	70.0	-69.5	69.5	-67.5	67.5
56.000	84.000	A	-75.0	70.0	-75.0	70.0	-75.0	70.0	-75.0	70.0	-75.0	70.0	-75.0	70.0	-71.9	70.0	-67.7	67.7	-64.9	64.9	-62.7	62.7	-60.4	60.4
60.000	90.000	A	-75.0	70.0	-75.0	70.0	-75.0	70.0	-75.0	70.0	-75.0	70.0	-68.4	68.4	-63.9	63.9	-60.0	60.0	-58.5	58.5	-56.2	56.2	-53.4	53.4
64.000	96.000	A	-75.0	70.0	-75.0	70.0	-75.0	70.0	-75.0	70.0	-71.1	70.0	-61.8	61.8	-58.9	58.9	-56.1	56.1	-53.8	53.8	-50.4	50.4	-47.7	47.7
67.333	101.000	A	-75.0	70.0	-75.0	70.0	-75.0	70.0	-75.0	70.0	-66.4	66.4	-58.2	58.2	-55.6	55.6	-52.6	52.6	-49.4	49.4	-45.9	45.9	-43.1	43.1
70.917	106.375	A	-75.0	70.0	-75.0	70.0	-75.0	70.0	-71.8	70.0	-61.8	61.8	-55.1	55.1	-51.9	51.9	-48.9	48.9	-45.8	45.8	-42.8	42.8	-40.3	40.3
72.000	108.000	A	-75.0	70.0	-75.0	70.0	-75.0	70.0	-70.4	70.0	-60.4	60.4	-54.3	54.3	-51.1	51.1	-47.9	47.9	-44.8	44.8	-42.2	42.2	-39.7	39.7
74.000	111.000	A	-75.0	70.0	-75.0	70.0	-73.7	70.0	-67.9	67.9	-59.0	59.0	-52.8	52.8	-49.9	49.9	-46.4	46.4	-43.5	43.5	-41.1	41.1	-38.6	38.6

1/3 X	1/3 O	1/3 X
X	O	
O	X	

TABLE 9. (BASED ON 1/4" TAPCONS OR #14 SCREWS) "XO" or "OX" & "1/3-1/3-1/3 XOX" WINDOWS REPORTS: FTL-3582, FTL-3729

GLAZING OPTIONS: B. 5/16" LAMI (1/8"HS,.090,1/8"HS) E. 13/16" LAMI (1/8"HS,3/8" SPACE,5/16" LAMI-W/ 1/8"HS,.090,1/8"HS)

ALL "XO" OR "OX" SIZES UP TO 74.000" WIDE x 63.000" HIGH AND ALL "1/3-1/3-1/3 XOX" SIZES UP TO 111.000" WIDE x 63.000" HIGH	-75.0	70.0

TABLE 10. (BASED ON 1/4" TAPCONS OR #14 SCREWS) "XO" or "OX" & "1/3-1/3-1/3 XOX" WINDOWS TEST REPORT: FTL-3580

GLAZING OPTION: C. 7/16" LAMI (3/16"A,.090,3/16"HS)

ALL "XO" OR "OX" SIZES UP TO 74.000" WIDE x 63.000" HIGH AND ALL "1/3-1/3-1/3 XOX" SIZES UP TO 111.000" WIDE x 63.000" HIGH	-90.0	70.0

NOTE: IF USING 3/16" TAPCONS OR #12 SCREWS DESIGN PRESSURE FOR "XO" OR "OX" AND "XOX" WINDOWS IS LIMITED TO 41.3 P.S.F.

PRODUCT REVISED
as complying with the Florida Building Code
Acceptance No 03-0611.02
Expiration Date MAY 22, 2008
By Manuel Perez
Miami-Dade Product Control Division

L. A. T.
7/10/03

Lucas A. Turner, P.E.
PE #58201
Mechanical

Revsd By:	Date:	Revisions:	
F.K.	3/17/03	A	REVISE TABLE 8, GLASS TYPE A
F.K.	3/25/03	B	ADD GLASS TYPE E TO TABLE 9
F.K.	7/10/03	C	NO CHANGE THIS SHEET
Drawn By: F.K.	Date: 12/17/02	Checked By:	Date:

1070 TECHNOLOGY DRIVE
NOKOMIS, FL 34275

P.O. BOX 1529
NOKOMIS, FL 34274

PGT Visibly Better

Description: PRESSURES- XO, OX, & 1/3-1/3-1/3 XOX WINDOWS

Title: ALUMINUM CASEMENT WINDOW, IMPACT

Series/Model:	Scale:	Sheet:	Drawing No.	Rev:
CA-740	NTS	7 of 12	7045-8	C

COMPARATIVE ANALYSIS TABLE 11. (BASED ON 1/4" TAPCONS OR #14 SCREWS) "XO" or "OX" & "XOX" UNEQUAL LITE WINDOWS

TEST REPORTS: FTL-3580, FTL-3582, FTL-3729

GLAZING OPTIONS: A. 5/16" LAMI (1/8"A,.090,1/8"HS) B. 5/16" LAMI (1/8"HS,.090,1/8"HS) C. 7/16" LAMI (3/16"A,.090,3/16"HS) E. 13/16" LAMI (1/8"HS,3/8" SPACE,5/16" LAMI-W/ 1/8"HS,.090,1/8"HS)

"XOX" WIDTH	VENT WIDTH	FIXED WIDTH		HEIGHT 26.000 NEG	26.000 POS	36.000 NEG	36.000 POS	38.375 NEG	38.375 POS	43.000 NEG	43.000 POS	48.000 NEG	48.000 POS	50.625 NEG	50.625 POS	54.000 NEG	54.000 POS	57.000 NEG	57.000 POS	60.000 NEG	60.000 POS	63.000 NEG	63.000 POS
69.264	19.125	31.014	A	-75.0	70.0	-75.0	70.0	-75.0	70.0	-74.1	70.0	-64.9	64.9	-60.6	60.6	-58.1	58.1	-56.1	56.1	-53.3	53.3	-50.5	50.5
			B,E	-75.0	70.0	-75.0	70.0	-75.0	70.0	-75.0	70.0	-75.0	70.0	-75.0	70.0	-75.0	70.0	-75.0	70.0	-75.0	70.0	-75.0	70.0
			C	-90.0	70.0	-90.0	70.0	-90.0	70.0	-90.0	70.0	-90.0	70.0	-90.0	70.0	-90.0	70.0	-90.0	70.0	-90.0	70.0	-90.0	70.0
86.919	24.000	38.919	A	-75.0	70.0	-69.1	69.1	-63.4	63.4	-56.5	56.5	-50.4	50.4	-47.5	47.5	-44.1	44.1	-41.6	41.6	-39.2	39.2	-36.9	36.9
			B,E	-75.0	70.0	-75.0	70.0	-75.0	70.0	-75.0	70.0	-75.0	70.0	-75.0	70.0	-75.0	70.0	-75.0	70.0	-75.0	70.0	-73.8	70.0
			C	-90.0	70.0	-90.0	70.0	-90.0	70.0	-90.0	70.0	-90.0	70.0	-90.0	70.0	-90.0	70.0	-90.0	70.0	-89.4	70.0	-85.2	70.0
95.973	26.500	42.973	A	-75.0	70.0	-60.5	60.5	-57.2	57.2	-62.1	62.1	-55.2	55.2	-52.6	52.6	-49.1	49.1	-46.2	46.2	-43.6	43.6	-41.1	41.1
			B,E	-75.0	70.0	-75.0	70.0	-75.0	70.0	-75.0	70.0	-75.0	70.0	-75.0	70.0	-75.0	70.0	-75.0	70.0	-75.0	70.0	-75.0	70.0
			C	-90.0	70.0	-90.0	70.0	-90.0	70.0	-90.0	70.0	-90.0	70.0	-90.0	70.0	-87.0	70.0	-81.9	70.0	-77.2	70.0	-73.1	70.0
108.649	30.000	48.649	A	-75.0	70.0	-53.5	53.5	-50.4	50.4	-54.5	54.5	-50.7	50.7	-48.2	48.2	-44.9	44.9	-42.0	42.0	-40.1	40.1	-38.0	38.0
			B,E	-75.0	70.0	-75.0	70.0	-75.0	70.0	-75.0	70.0	-75.0	70.0	-75.0	70.0	-75.0	70.0	-75.0	70.0	-75.0	70.0	-75.0	70.0
			C	-90.0	70.0	-90.0	70.0	-90.0	70.0	-90.0	70.0	-84.7	70.0	-79.5	70.0	-73.6	70.0	-69.7	69.7	-66.3	66.3	-63.1	63.1
115.892	32.000	51.892	A	-75.0	70.0	-49.9	49.9	-46.8	46.8	-51.3	51.3	-47.4	47.4	-45.5	45.5	-42.7	42.7	-40.7	40.7	-38.6	38.6	-36.6	36.6
			B,E	-75.0	70.0	-75.0	70.0	-75.0	70.0	-75.0	70.0	-75.0	70.0	-75.0	70.0	-75.0	70.0	-75.0	70.0	-75.0	70.0	-73.2	70.0
			C	-90.0	70.0	-90.0	70.0	-90.0	70.0	-90.0	70.0	-78.6	70.0	-73.2	70.0	-68.3	68.3	-64.8	64.8	-61.4	61.4	-58.8	58.8
122.000	33.687	54.627	A	-75.0	70.0	-47.3	47.3	-44.0	44.0	-48.4	48.4	-44.7	44.7	-42.8	42.8	-41.4	41.4	-39.5	39.5	-37.5	37.5	-35.7	35.7
			B,E	-75.0	70.0	-75.0	70.0	-75.0	70.0	-75.0	70.0	-75.0	70.0	-75.0	70.0	-75.0	70.0	-75.0	70.0	-74.9	70.0	-71.4	70.0
			C	-90.0	70.0	-90.0	70.0	-90.0	70.0	-85.8	70.0	-74.0	70.0	-69.4	69.4	-64.7	64.7	-61.0	61.0	-58.4	58.4	-55.7	55.7
123.135	34.000	55.135	A	-75.0	70.0	-46.8	46.8	-43.6	43.6	-47.9	47.9	-44.3	44.3	-42.4	42.4	-41.1	41.1	-39.3	39.3	-37.3	37.3	-35.5	35.5
			B,E	-75.0	70.0	-75.0	70.0	-75.0	70.0	-75.0	70.0	-75.0	70.0	-75.0	70.0	-75.0	70.0	-75.0	70.0	-74.6	70.0	-71.0	70.0
			C	-90.0	70.0	-90.0	70.0	-90.0	70.0	-85.0	70.0	-73.1	70.0	-68.8	68.8	-64.1	64.1	-60.5	60.5	-57.9	57.9	-55.2	55.2
126.000	34.791	56.418	A	-75.0	70.0	-45.5	45.5	-42.6	42.6	-46.7	46.7	-43.1	43.1	-41.6	41.6	-40.2	40.2	-38.7	38.7	-36.9	36.9	-35.0	35.0
			B,E	-75.0	70.0	-75.0	70.0	-75.0	70.0	-75.0	70.0	-75.0	70.0	-75.0	70.0	-75.0	70.0	-75.0	70.0	-73.7	70.0	-70.1	70.0
			C	-90.0	70.0	-90.0	70.0	-90.0	70.0	-82.8	70.0	-71.3	70.0	-67.3	67.3	-62.5	62.5	-59.2	59.2	-56.5	56.5	-53.8	53.8
130.000	35.896	58.209	A	-74.4	70.0	-43.6	43.6	-41.2	41.2	-45.1	45.1	-41.5	41.5	-40.4	40.4	-38.9	38.9	-37.7	37.7	-36.2	36.2	-34.3	34.3
			B,E	-75.0	70.0	-75.0	70.0	-75.0	70.0	-75.0	70.0	-75.0	70.0	-75.0	70.0	-75.0	70.0	-75.0	70.0	-72.4	70.0	-68.6	68.6
			C	-90.0	70.0	-90.0	70.0	-90.0	70.0	-79.9	70.0	-69.3	69.3	-65.3	65.3	-60.6	60.6	-57.6	57.6	-54.7	54.7	-51.9	51.9
130.378	36.000	58.378	A	-74.3	70.0	-43.5	43.5	-41.0	41.0	-45.0	45.0	-41.4	41.4	-40.3	40.3	-38.8	38.8	-37.6	37.6	-36.1	36.1	-34.3	34.3
			B,E	-75.0	70.0	-75.0	70.0	-75.0	70.0	-75.0	70.0	-75.0	70.0	-75.0	70.0	-75.0	70.0	-75.0	70.0	-72.3	70.0	-68.5	68.5
			C	-90.0	70.0	-90.0	70.0	-90.0	70.0	-79.6	70.0	-69.1	69.1	-65.1	65.1	-60.5	60.5	-57.4	57.4	-54.6	54.6	-51.7	51.7
134.000	37.000	60.000	A	-72.9	70.0	-42.2	42.2	-39.7	39.7	-43.5	43.5	-40.4	40.4	-39.2	39.2	-37.7	37.7	-36.7	36.7	-35.5	35.5	-33.7	33.7
			B,E	-75.0	70.0	-75.0	70.0	-75.0	70.0	-75.0	70.0	-75.0	70.0	-75.0	70.0	-75.0	70.0	-73.3	70.0	-71.0	70.0	-67.4	67.4
			C	-90.0	70.0	-90.0	70.0	-90.0	70.0	-77.1	70.0	-67.3	67.3	-63.3	63.3	-59.1	59.1	-55.9	55.9	-53.0	53.0	-50.0	50.0

"XO" & "OX" WINDOW WIDTHS EQUAL THE SUM OF THE VENT WIDTH AND THE FIXED WIDTH.

TABLE 12. (BASED ON 1/4" TAPCONS OR #14 SCREWS) "XO" or "OX" & "XOX" UNEQUAL LITE WINDOWS TEST REPORT: FTL-3580

GLAZING OPTION: D. 7/16" LAMI (3/16"HS,.090,3/16"HS)

ALL "XOX" SIZES UP TO 134.000" WIDE x 63.000" HIGH WITH 37.000" MAX. VENT WIDTH AND 60.000" MAX. FIXED WIDTH AND ALL "XO" or "OX" SIZES UP TO 97.000" WIDE x 63.000" HIGH WITH 37.000" MAX. VENT WIDTH AND 60.000" MAX. FIXED WIDTH	-90.0	70.0

NOTE: IF USING 3/16" TAPCONS OR #12 SCREWS DESIGN PRESSURE FOR "XO" OR "OX" AND "XOX" WINDOWS IS LIMITED TO 41.3 P.S.F.

Revsd By:	Date:	Revisions:	
F.K.	3/17/03	A	REVISE TABLE 11, GLASS TYPES A & C
F.K.	3/25/03	B	ADD GLASS TYPE E TO TABLE 11
F.K.	7/10/03	C	NO CHANGE THIS SHEET
Drawn By: F.K.	Date: 12/17/02	Checked By:	Date:

1070 TECHNOLOGY DRIVE
NOKOMIS, FL 34275

P.O. BOX 1529
NOKOMIS, FL 34274

PGT Visibly Better

Description: PRESSURES- UNEQUAL CONFIG. XO, OX & XOX

Title: ALUMINUM CASEMENT WINDOW, IMPACT

Series/Model	Scale	Sheet	Drawing No.	Rev
CA-740	NTS	8 of 12	7045-8	C

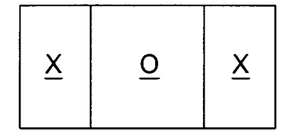

UNEQUAL LITES

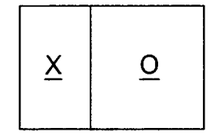

UNEQUAL LITES

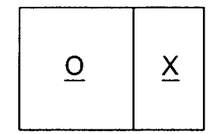

UNEQUAL LITES

PRODUCT REVISED
as complying with the Florida Building Code
Acceptance No 03-0611.02
Expiration Date MAY 22, 2008
By Manuel Perez
Miami Dade Product Control Division

7/10/03

Lucas A. Turner, P.E.
PE #58201
Mechanical

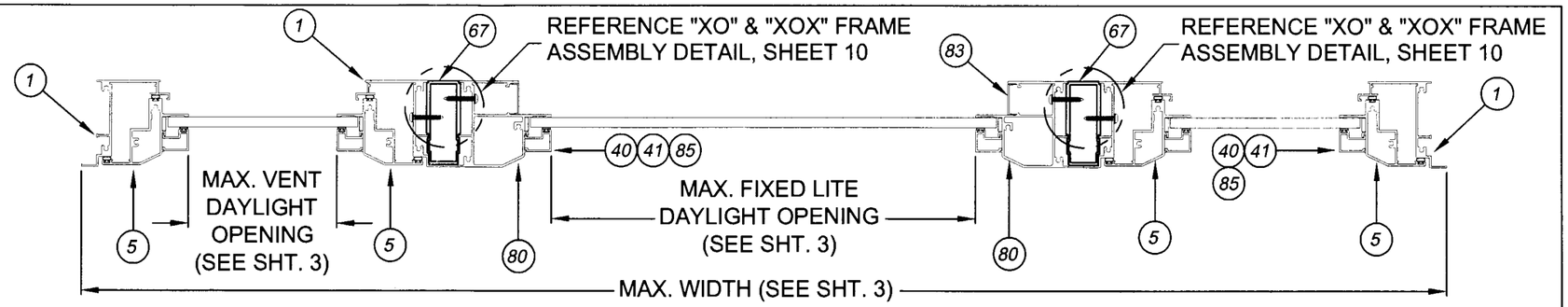

HORIZONTAL SECTION - XOX

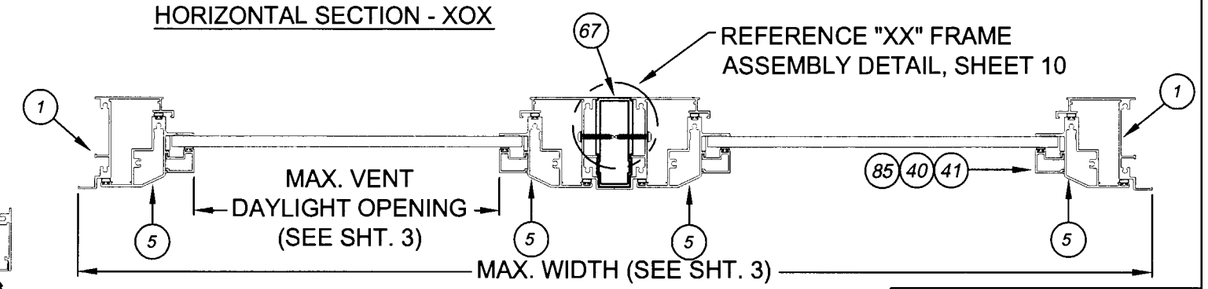

HORIZONTAL SECTION - XX

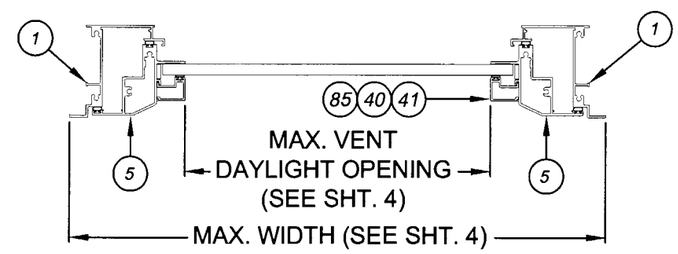

HORIZONTAL SECTION - X

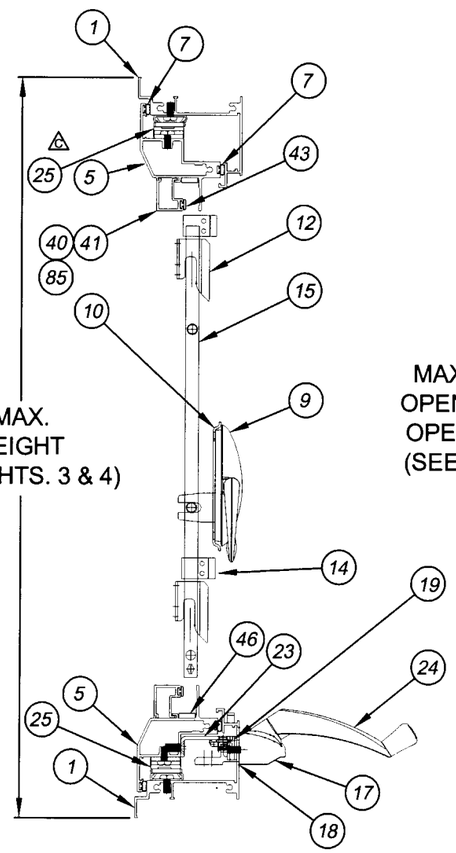

VERTICAL SECTION
OPERABLE UNIT

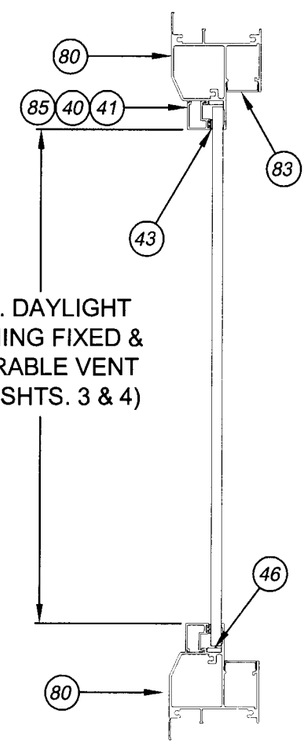

VERTICAL SECTION
FIXED UNIT

PRODUCT REVISED
as complying with the Florida Buiding Code
Acceptance No 03-0611.02
Expiration Date MAY 22 2008
By Manuel Perez
Miami-Dade Product Control Division

7/10/03

Revsd By:	Date:	Revisions:	
F.K.	3/17/03	A	NO CHG THIS SHEET
F.K.	3/25/03	B	ADD 13/16" I.G. GLAZING BEAD ITEM
F.K.	7/10/03	C	SHOW TOP HINGE
Drawn By: F.K.	Date: 12/17/02	Checked By:	Date:

1070 TECHNOLOGY DRIVE
NOKOMIS, FL 34275

P.O. BOX 1529
NOKOMIS, FL 34274

PGT
Visibly Better

Description: SECTIONS

Title: ALUMINUM CASEMENT WINDOW, IMPACT

Series/Model:	Scale:	Sheet:	Drawing No.	Rev:
CA-740	NTS	9 of 12	7045-8	C

Lucas A. Turner, P.E.
PE #58201
Mechanical

NOTE: ALL ALUMINUM SHALL BE OF 6063-T6

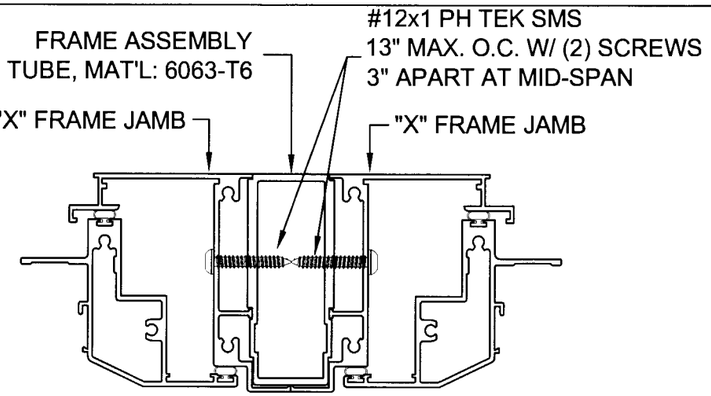

"XX" FRAME ASSEMBLY DETAIL

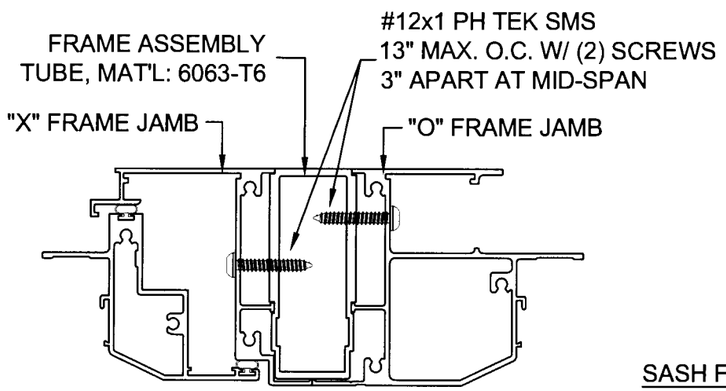

"XO" & "XOX" FRAME ASSEMBLY DETAIL

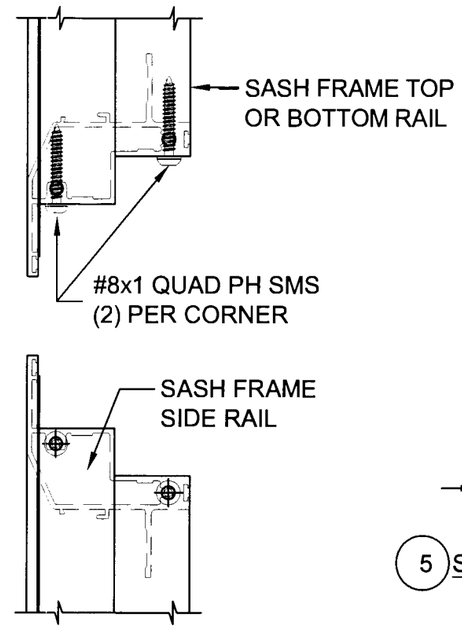

SASH FRAME ASSEMBLY DETAIL

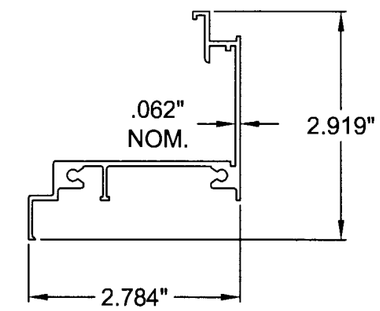

1 FRAME HEAD, SILL, JAMB

MAT'L: 6063-T6
DWG# 7002A

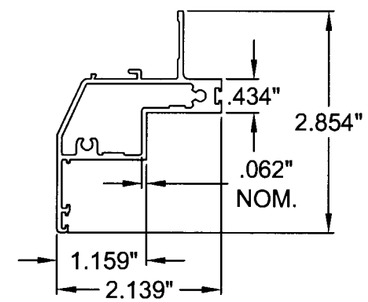

5 SASH FRAME HEAD, SILL, JAMB

MAT'L: 6063-T6
DWG# 7003A

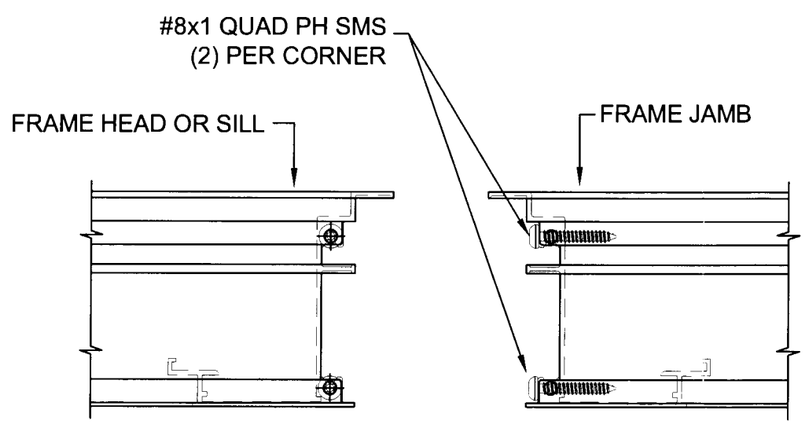

MAIN FRAME ASSEMBLY DETAIL

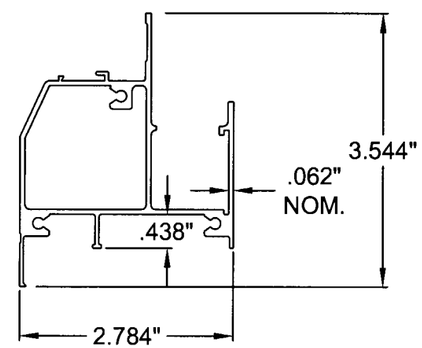

80 FIXED FRAME HEAD, SILL, JAMB

MAT'L: 6063-T6
DWG# 7005A

PRODUCT REVISED
as complying with the Florida
Building Code
Acceptance No 03-0611.02
Expiration Date MAY 22, 2008
By Miami Dade Product Control
Division

7/10/03

Lucas A. Turner, P.E.
PE #58201
Mechanical

Revsd By:	Date:	Revisions:	
F.K.	3/17/03	A	REVISED FRAME ASS'Y DETAIL SCREW SPACING
F.K.	3/25/03	B	NO CHANGE THIS SHEET
F.K.	7/10/03	C	NO CHANGE THIS SHEET
Drawn By: F.K.	Date: 12/17/02	Checked By:	Date:

1070 TECHNOLOGY DRIVE
NOKOMIS, FL 34275

P.O. BOX 1529
NOKOMIS, FL 34274

PGT
Visibly Better

Description: EXTRUSIONS & ASSEMBLY DETAILS

Title: ALUMINUM CASEMENT WINDOW, IMPACT

Series/Model:	Scale:	Sheet:	Drawing No.	Rev:
CA-740	NTS	10 of 12	7045-8	C

PARTS LIST

ITEM	DWG #	PGT. #	DESCRIPTION
1	7002A		MAIN FRAME - HEAD, SILL & JAMBS
2	1155	781PQA	#8 X 1 QUAD PH SMS
3	7008		FRAME CORNER KEY
4			1/2"X1/2"X1/8" CLOSED-CELL FOAM TAPE
5	7003A		SASH - TOP, BOTTOM & SIDE RAILS
6	1155	781PQA	#8 X 1 QUAD PH SMS
7	7017	67017K	BULB WEATHERSTRIP .187X.240
8	7009		SASH CORNER KEY
9	7024		MAXIM MULTI-POINT LOCK
10	7026		LOCK SUPPORT PLATE
11			#10-24 X .562 PH. PN. TYPE F
12	7014		MULTI-LOCK KEEPER (R.H. & L.H.)
13	1157	78X78PPSMS	#8 X .875 PH. PN. SMS
14	7013		TIE BAR GUIDE
15	7015		TIE BAR ASSEMBLY
16	7028		MAXIM DYAD OPERATOR
17	7027		MAXIM DUAL ARM OPERATOR
18	7030		OPERATOR GASKET
19	7031		BACKING PLATE
20			#8-32 X .375 PH. PN. TYPE B
21	7032		STUD BRACKET (L.H. & R.H.)
22		7858ZA	#8 X 5/8" FLT. PHL SMS
23	7033		OPERATOR TRACK & SLIDER (DUAL ARM)
24	7022		SNAP-ON HANDLE
25	7023		12" HINGE (HEAVY DUTY)
26		710x12FP	#10 X .500 PH. PHL.
30			5/16" LAMINATED (1/8A & 1/8HS GLASS) .090 INNER LAYER - SOLUTIA OR DUPONT PVB
31			5/16" LAMINATED (1/8HS & 1/8HS GLASS) .090 INNER LAYER - SOLUTIA OR DUPONT PVB
32			7/16" LAMINATED (3/16A & 3/16HS GLASS) .090 INNER LAYER - SOLUTIA OR DUPONT PVB
33			7/16" LAMINATED (3/16HS & 3/16HS GLASS) .090 INNER LAYER - SOLUTIA OR DUPONT PVB
40	7036		GLAZING BEAD (5/16")
41	7042		GLAZING BEAD (7/16")
43	1224	6TP247	VINYL BULB WSTP (THICK)
44			SILICONE - DOW CORNING 899 OR 995
45			PARABOND
46	1634	6163K	SETTING BLOCK
50	7006		SCREEN FRAME
51	7040		SCREEN CORNER KEY
52			SCREEN CLOTH
53	1635	61635K	SCREEN SPLINE - SERRATED
54	331	60976	CASEMENT SCREEN CLIP
55		78x12PSTW/B	#8 X .500 SQ. PN. TEK SMS
67	7004A	67004	CASEMENT FRAME ASS'Y. TUBE
68		712X1PPT	#12 X 1" PH. PHIL. TEK.
69	7011		LOCK SUPPORT PLATE
70	7012		LOCK SPACER
71	7019	711573	SNAP-ON T-HANDLE KNOB
72	7018	7FLDHD	FOLDING HANDLE
73	7025		MAXIM SINGLE LOCK
74	7016		SINGLE LOCK KEEPER
75		70834A	#8 X .750 QUAD PN SMS
80	7005A		FIXED WINDOW FRAME - HEAD, SILL & JAMBS
81	1155	781PQA	#8 X 1 QUAD PN SMS
82	7010		FIXED FRAME CORNER KEY
83	7007		INSTALLATION HOLE COVER
85	7047	67407	GLAZING BEAD (13/16" I.G.)
86		13/16"	I.G. GLASS (1/8"HS,3/8"AIR SPACE,5/16"LAMI) 5/16" LAMI (2 LITES OF 1/8"HS GLASS WITH AN .O90 INNER LAYER - SOLUTIA OR DUPONT PVB

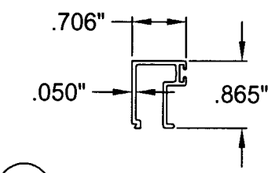

40 5/16" GLAZING BEAD
MAT'L: 6063-T6
DWG# 7036

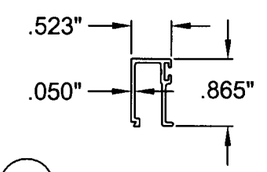

41 7/16" GLAZING BEAD
MAT'L: 6063-T6
DWG# 7042

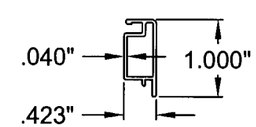

50 CASEMENT SCREEN FRAME
MAT'L: 6063-T6
DWG# 7006

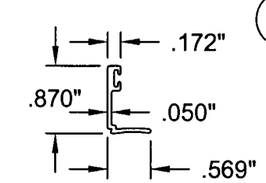

85 13/16" GLAZING BEAD
MAT'L: 6063-T6
DWG# 7047

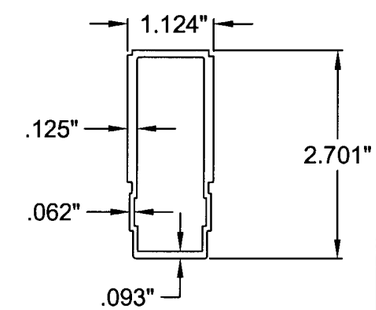

67 CASEMENT FRAME ASSEMBLY TUBE
MAT'L: 6063-T6
DWG# 7004A

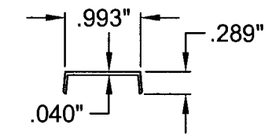

83 INSTALLATION HOLE COVER
MAT'L: 6063-T6
DWG# 7007

PRODUCT REVISED
as complying with the Florida Building Code
Acceptance No 03-0611.02
Expiration Date MAY 22,2008
By Manuel Suarez
Miami Dade Product Control Division

7/10/03

Lucas A. Turner, P.E.
PE #58201
Mechanical

Revsd By:	Date:	Revisions:	
F.K.	3/17/03	A	NO CHG THIS SHEET
F.K.	3/25/03	B	ADD 13/16" I.G. GLASS & GLAZING BEAD
F.K.	7/10/03	C	NO CHANGE THIS SHEET
Drawn By: F.K.	Date: 12/17/02	Checked By:	Date:

1070 TECHNOLOGY DRIVE
NOKOMIS, FL 34275

P.O. BOX 1529
NOKOMIS, FL 34274

PGT
Visibly Better

Description: PARTS LIST & EXTRUSIONS

Title: ALUMINUM CASEMENT WINDOW, IMPACT

Series/Model:	Scale:	Sheet:	Drawing No.	Rev:
CA-740	NTS	11 of 12	7045-8	C

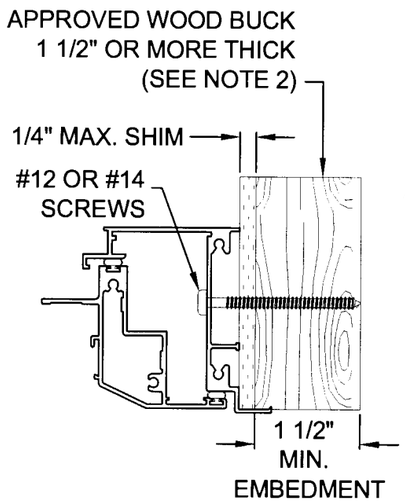

OPERABLE UNIT FRAME
TO WOOD BUCK
1 1/2" OR MORE THICK

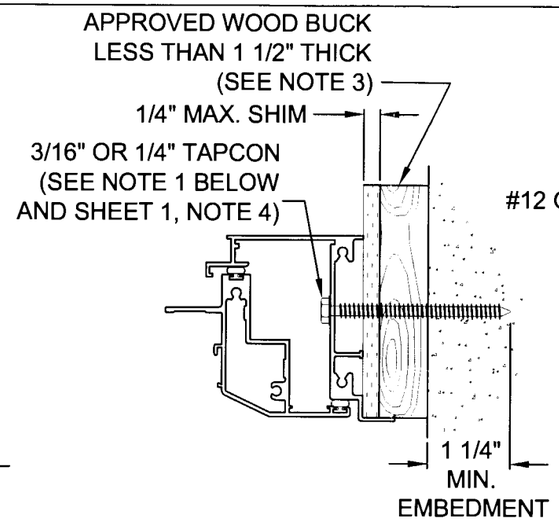

OPERABLE UNIT FRAME
TO CONCRETE W/ WOOD BUCK
LESS THAN 1 1/2" THICK

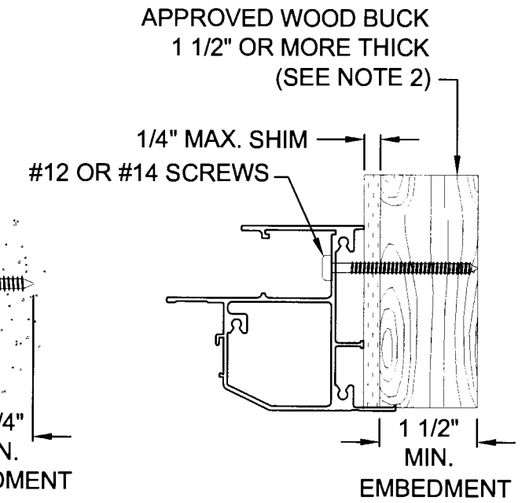

FIXED UNIT FRAME
TO WOOD BUCK
1 1/2" OR MORE THICK

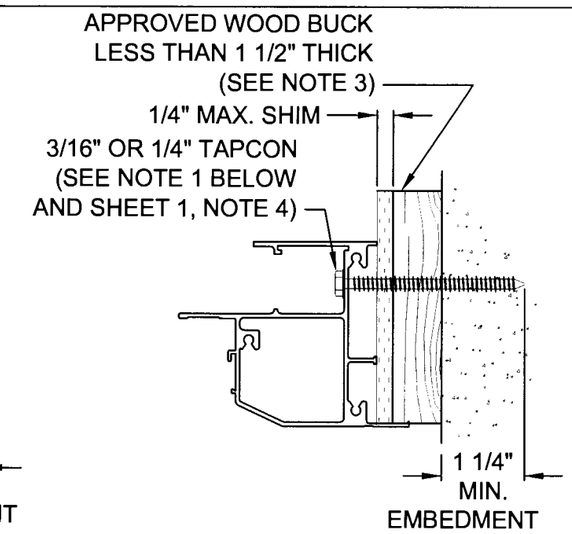

FIXED UNIT FRAME TO CONCRETE W/
WOOD BUCK LESS THAN 1 1/2" THICK

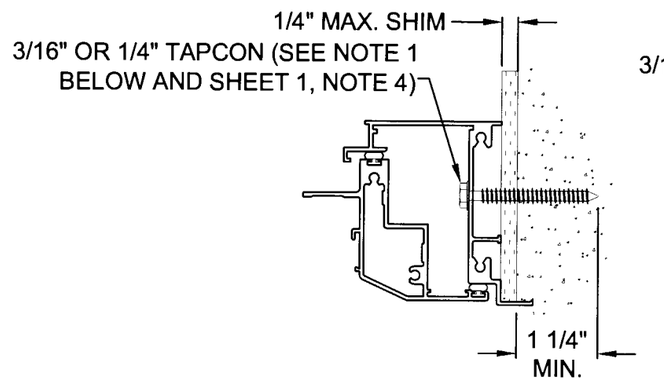

OPERABLE UNIT FRAME
TO CONCRETE

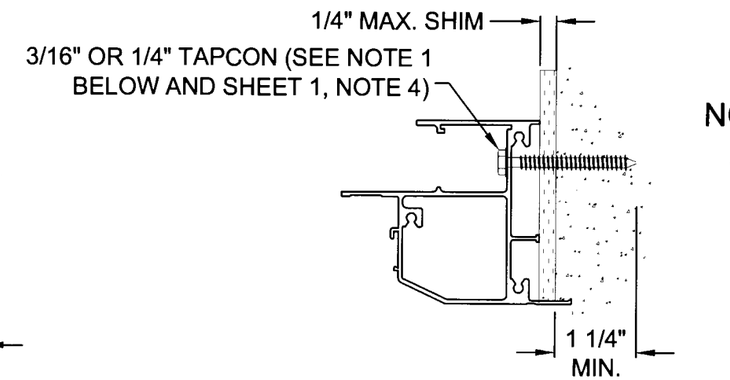

FIXED UNIT FRAME
TO CONCRETE

NOTE: ALL DETAILS APPLY TO HEAD, SILL, AND JAMB.

NOTES:

1. USE ONLY MIAMI-DADE COUNTY APPROVED ELCO OR ITW TAPCONS.
2. INSTALLATION TO THE SUBSTRATE OF WOOD BUCKS 1 1/2" OR MORE THICK TO BE ENGINEERED BY OTHERS AND TO BE REVIEWED BY BUILDING OFFICIAL.
3. INSTALLATION TO THE SUBSTRATE OF WOOD BUCKS LESS THAN 1 1/2" THICK TO BE ENGINEERED BY OTHERS.

PRODUCT REVISED
as complying with the Florida
Buiding Code
Acceptance No 03-0611.02
Expiration Date MAY 22, 2008
By Manuel Perez
Miami Dade Product Control
Division

1 of 1
7/10/03

Revsd By:	Date:	Revisions:	
F.K.	3/17/03	A	ADDED #14 SCREW OPTION
F.K.	3/25/03	B	NO CHANGE THIS SHEET
F.K.	7/10/03	C	NO CHANGE THIS SHEET
Drawn By: F.K.	Date: 12/17/02	Checked By:	Date:

1070 TECHNOLOGY DRIVE
NOKOMIS, FL 34275

P.O. BOX 1529
NOKOMIS, FL 34274

PGT
Visibly Better

Description: ANCHORAGE DETAILS

Title: ALUMINUM CASEMENT WINDOW, IMPACT

Series/Model:	Scale:	Sheet:	Drawing No.	Rev:
CA-740	NTS	12 of 12	7045-8	C

Lucas A. Turner, P.E.
PE #58201
Mechanical