MIAMI-DADE

BUILDING CODE COMPLIANCE OFFICE (BCCO)
PRODUCT CONTROL DIVISION

MIAMI-DADE COUNTY, FLORIDA
METRO-DADE FLAGLER BUILDING
140 WEST FLAGLER STREET, SUITE 1603
MIAMI, FLORIDA 33130-1563
(305) 375-2901 FAX (305) 375-2908

NOTICE OF ACCEPTANCE (NOA)

United Steel Products Co.
703 Rogers Drive.
Montgomery, MN 56069

SCOPE:

This NOA is being issued under the applicable rules and regulations governing the use of construction materials. The documentation submitted has been reviewed by Miami-Dade County Product Control Division and accepted by the Board of Rules and Appeals (BORA) to be used in Miami Dade County and other areas where allowed by the Authority Having Jurisdiction (AHJ).

This NOA shall not be valid after the expiration date stated below. The Miami-Dade County Product Control Division (In Miami Dade County) and/or the AHJ (in areas other than Miami Dade County) reserve the right to have this product or material tested for quality assurance purposes. If this product or material fails to perform in the accepted manner, the manufacturer will incur the expense of such testing and the AHJ may immediately revoke, modify, or suspend the use of such product or material within their jurisdiction. BCPRC reserves the right to revoke this acceptance, if it is determined by Miami-Dade county Product Control Division that this product or material fails to meet the requirements of the applicable building code.
This product is approved as described herein, and has been designed to comply with the High velocity Hurricane Zone of the Florida Building Code.

DESCRIPTION: Wood Connectors EHUH & UH Series.

APPROVAL DOCUMENT: Drawing No.**MD0603A**, titled "EHUH SERIES & UH SERIES" sheet 1 & 2, with no revisions, dated 06/09/03, prepared by United Steel Products Company signed and sealed by R. W. Lutz, PE, bearing the Miami-Dade County Product Control Approval stamp with the Notice of Acceptance (NOA) number and approval date by the Miami-Dade County Product Control Division.

MISSILE IMPACT RATING: None

LABELING: Each unit shall bear a permanent label with the manufacturer's name or logo, city, state and following statement: "Miami-Dade County Product Control Approved", unless otherwise noted herein.

RENEWAL of this NOA shall be considered after a renewal application has been filed and there has been no change in the applicable building code negatively affecting the performance of this product.

TERMINATION of this NOA will occur after the expiration date or if there has been a revision or change in the materials, use, and/or manufacture of the product or process. Misuse of this NOA as an endorsement of any product, for sales, advertising or any other purposes shall automatically terminate this NOA. Failure to comply with any section of this NOA shall be cause for termination and removal of NOA.

ADVERTISEMENT: The NOA number preceded by the words Miami-Dade County, Florida, and followed by the expiration date may be displayed in advertising literature. If any portion of the NOA is displayed, then it shall be done in its entirety.

INSPECTION: A copy of this entire NOA shall be provided to the user by the manufacturer or its distributors and shall be available for inspection at the job site at the request of the Building Official.
This NOA revises NOA #00-0822.01 and consists of this page 1, evidence page & approval document mentioned above.
The submitted documentation was reviewed by **Candido F. Font PE.**

10/2/3

PRODUCT CONTROL ACCEPTED

NOA No: 03-0611.05
Expiration Date: August 21, 2008
Approval Date: October 2, 2003

United Steel Products Company.

NOTICE OF ACCEPTANCE: EVIDENCE PAGE

A DRAWINGS

1. Drawings prepared by United Steel Products Company, titled "EHUH SERIES & UH SERIES", Drawing No. MD0603A, sheets No. 1 & 2, dated 06/09/03 with no revisions, signed and sealed by R. W. Lutz, PE.

B TEST

Test reports on wood connectors per ASTM D1761 by Kleinfelder, signed and sealed by C. R. Caudel, PE.

	Report No.	Wood Connector	Direction	Date
1.	PT # 96-0904	UH 26	Down & Up	09/30/96
2	PT # 96-0905	UH 28	Down & Up	09/30/96
3	PT #96-0907	UH 210	Down & Up	10/02/96
2.	PT # 96-0901	ST 201	Down & Up	09/30/96
3.	PT # 96-0902	ST 201	Down & Up	11/05/96
4.	PT # 96-0903	ST2-202	Down & Up	11/06/96
5.	PT # 96-0908A	EHUH 26	Down & Up	11/06/96
5.	PT # 96-1009A	EHUH 28	Down & Up	01/29/97
6	PT # 96-1015	EHUH 210	Down & Up	03/04/97

C CALCULATIONS

Report of Design Capacities prepared for Hughes Manufacturing., Inc.

	Product Model	No. of Pages	Date	Signature
1.	EHUH Series	1 through 24	02/28/96	T. F. Devening, PE
2	UH Series	1 through 27	12/15/96	T. F. Devening, PE.
3	ST Series	1 through 15	12/15/96	T. F. Devening, PE

D STATEMENTS

1. No Change letter issued by United Steel Products Company. on 04/26/00 and signed by R. C. Brunson.
2. No interest letter issued by Thomas F. Devening Consulting Engineer, on 01/28/97, signed and sealed by T. F. Devening, PE.
3. Certificate of Merger between Hughes Manufacturing Inc. and United Steel Products Co. by The Secretary of the State of Minnesota, on 02/14/2000

10/2/3

Cándido F. Font PE.
Sr. Product Control Examiner
NOA No 03-0611.05
Expiration Date: August 21, 2008
Approval Date: October 2, 2003

EXTRA HEAVY CONNECTOR 14 GAUGE

PRODUCT CODE	JOIST SIZE	DIMENSIONS			FASTENER		DESIGN LOADS	
		W	H	A	HEADER	JOIST	DOWN	UPLIFT
EHUH26[2]	2X6	1 5/8	5 1/4	3 1/2	20-16d	10-10d X 1 1/2	2385	1200
EHUH26N[2]	2X6	1 5/8	5 1/4	3 1/2	20-HN20A	10-HN20A	3160	1730
EHUH28[2]	2X8	1 5/8	7 1/4	3 1/2	28-16d	14-10d X 1 1/2	3470	1845
EHUH28N[2]	2X8	1 5/8	7 1/4	3 1/2	28-HN20A	14-HN20A	4110	2515
EHUH210[2]	2X10	1 5/8	9 1/4	3 1/2	32-16d	16-10d X 1 1/2	3965	2110
EHUH210N[2]	2X10	1 5/8	9 1/4	3 1/2	32-HN20A	16-HN20A	4700	2875
EHUH26-2	(2) 2X6	3 1/8	5 3/8	3 1/2	22-16d	11-10d X 1 1/2	2875	1690
EHUH26-2N	(2) 2X6	3 1/8	5 3/8	3 1/2	22-HN20A	11-HN20A	3285	2195
EHUH28-2	(2) 2X8	3 1/8	7 3/8	3 1/2	32-16d	14-10d	4185	2155
EHUH28-2N	(2) 2X8	3 1/8	7 3/8	3 1/2	32-HN20A	14-HN20A	4775	2790
EHUH28-3	(2) 2X8	5 1/8	6 13/16	3 1/2	40-16d	16-10d	5190	2645
EHUH28-3N	(2) 2X8	5 1/8	6 13/16	3 1/2	40-HN20A	16-HN20A	5335	2850
EHUH210-2	(2) 2X10	3 1/8	9 3/8	3 1/2	40-16d	16-10d	5190	1645
EHUH210-2N	(2) 2X10	3 1/8	9 3/8	3 1/2	40-HN20A	16-HN20A	5335	2850
EHUH46	4X6	3 9/16	5 1/8	3 1/2	22-16d	11-10d	2875	1690
EHUH46N	4X6	3 9/16	5 1/8	3 1/2	22-HN20A	11-HN20A	3285	2195
EHUH48	4X8	3 9/16	7 1/8	3 1/2	32-16d	14-10d	4185	2155
EHUH48N	4X8	3 9/16	7 1/8	3 1/2	32-HN20A	14-HN20A	4775	2790
EHUH410	4X10	3 9/16	9 1/8	3 1/2	40-16d	16-10d	5190	2715
EHUH410N	4X10	3 9/16	9 1/8	3 1/2	40-HN20A	16-HN20A	5335	2850

NOTE 1.) PENETRATION OF FASTENER IN HEADER IS 2" FOR 16d NAIL & 1 3/4" FOR HN20A

NOTE 2.) PENETRATION OF FASTENER IN JOIST IS 1 1/2"

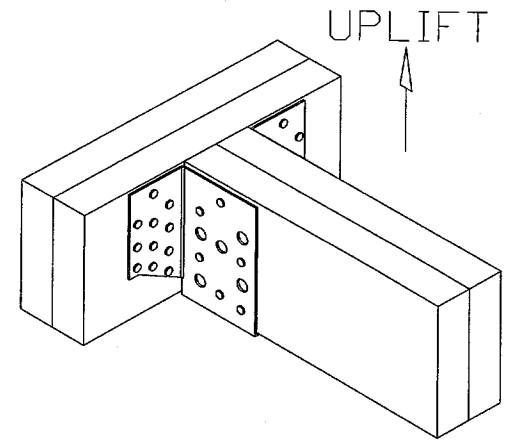

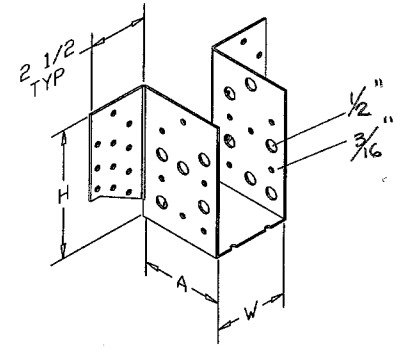

EHUH26-2 SHOWN
NTS

Approved as complying with the Florida Building Code
Date 10/02/03
NOA# 03-0611.05
Miami Dade Product Control Division
By

GENERAL NOTES

1) STEEL SHALL CONFORM TO ASTM A653 STRUCTURAL GRADE 33; U. O. N.

2) FASTENERS ARE COMMON WIRE NAILS UNLESS OTHERWISE NOTED.

3) ALLOWABLE UPLIFT LOADS HAVE BEEN INCREASED BY A SHORT TERM DURATION FACTOR OF 33% FOR WIND LOAD CONDITIONS. NO FURTHER INCREASE IS ALLOWED.

4) ALLOWABLE DOWN LOADS ARE NOT INCREASED BY SHORT TERM DURATION FACTOR.

Robert W. Lutz
9 JUN 03

UNITED STEEL PRODUCTS COMPANY
703 ROGERS DRIVE, MONTGOMERY, MN. 56069 PHONE (507) 364-7333

NAME: EHUH SERIES

DATE: 6/9/03

ROBERT W. LUTZ
PROFESSIONAL ENGINEER (STRUCTURAL)
FLORIDA REG. NO. 55409

SHEET: 1 OF 2

DRAWING NO. MD0603A

MDADE

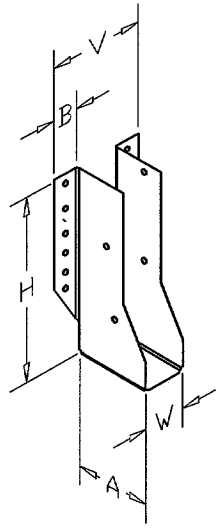

UH28 SHOWN

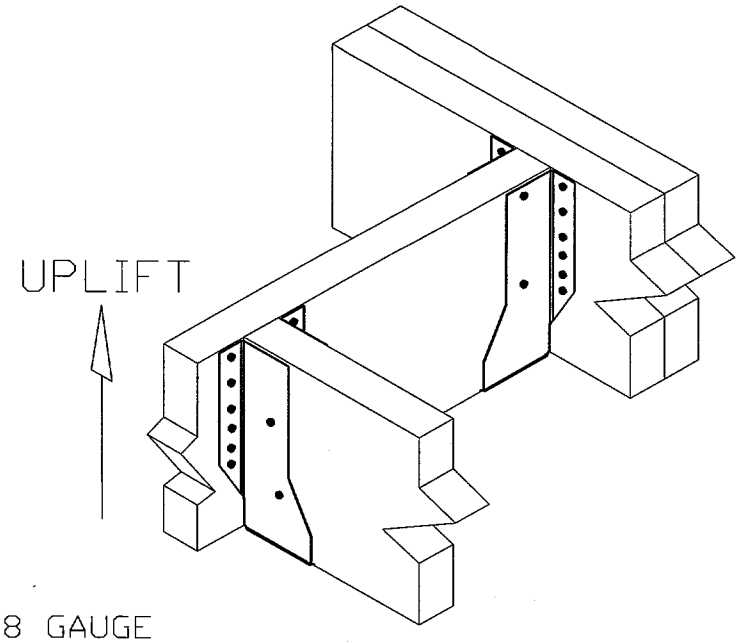

JOIST HANGER U-TYPE 18 GAUGE

PRODUCT CODE	JOIST SIZE	DIMENSIONS					FASTENERS		DESIGN LOAD			
		A	B	H	W	V	HEADER	JOIST	16d 100%	16d UPLIFT	20d 100%	20d UPLIFT
UH210'	2X10	3	1	9 1/4	1 5/8	3 3/4	16	5	2320	900	2800	1440
UH24'	2X4	3	1	3 1/4	1 5/8	3 3/4	4	2	580	----	700	----
UH26'	2X6	3	1	5 1/4	1 5/8	3 3/4	8	3	1160	720	1400	785
UH28'	2X8	3	1	7 1/4	1 5/8	3 3/4	12	4	1740	735	2100	1110
UH36	3X6	3	1	4 3/4	2 5/8	4 3/4	8	3	1160	----	1400	700
UH46	4X6	3	1	5 1/4	3 5/8	5 3/4	10	3	1450	----	1750	700

NOTES:
1. NAILS ON JOIST SHALL BE LONG ENOUGH TO BE DRIVEN THROUGH BOTH PLATES & CLINCHED.
2. PENETRATION OF FASTENERS IN HEADER & JOIST SHALL BE 2" FOR 16d NAILS & 2 3/8" FOR 20d NAILS.

Approved as complying with the Florida Building Code
Date 10/02/03
NOA# 03-0611.05
Miami Dade Product Control Division
By

GENERAL NOTES

1) STEEL SHALL CONFORM TO ASTM A653 STRUCTURAL GRADE 33, AND A MINIMUM GALVANIZED COATING OF G60.
2) FASTENERS ARE COMMON WIRE NAILS UNLESS OTHERWISE NOTED.
3) ALLOWABLE LOADS ARE BASED ON THE NATIONAL DESIGN SPECIFICATIONS FOR WOOD CONSTRUCTION 1997 EDITION FOR SOUTHERN YELLOW PINE (G= 0.55 OR BETTER AND MOISTURE CONTENT OF 19% OR LESS) ALL TESTS PERFORMED IN ACCORDANCE WITH ASTM D1761.
4) ALLOWABLE UPLIFT LOADS HAVE BEEN INCREASED BY A DURATION FACTOR OF 33% FOR WINDLOAD CONDITION. NO FURTHER INCREASE IS ALLOWED.

Robert W. Lutz
9 Jun 03

UNITED STEEL PRODUCTS COMPANY
703 ROGERS DRIVE, MONTGOMERY, MN. 56069 PHONE (507) 364-7333

NAME: UH SERIES

DATE: 6/9/03

ROBERT W. LUTZ
PROFESSIONAL ENGINEER (STRUCTURAL)
FLORIDA REG. NO. 55409

SHEET: 2 OF 2

DRAWING NO. MD0603A

MDADE