MIAMI-DADE

BUILDING CODE COMPLIANCE OFFICE (BCCO)
PRODUCT CONTROL DIVISION

MIAMI-DADE COUNTY, FLORIDA
METRO-DADE FLAGLER BUILDING
140 WEST FLAGLER STREET, SUITE 1603
MIAMI, FLORIDA 33130-1563
(305) 375-2901 FAX (305) 375-2908

NOTICE OF ACCEPTANCE (NOA)

EFCO Corporation
1000 County Road; P.O. Box 609
Monett, MO 65708-0609

SCOPE:

This NOA is being issued under the applicable rules and regulations governing the use of construction materials. The documentation submitted has been reviewed by Miami-Dade County Product Control Division and accepted by the Board of Rules and Appeals (BORA) to be used in Miami Dade County and other areas where allowed by the Authority Having Jurisdiction (AHJ).

This NOA shall not be valid after the expiration date stated below. The Miami-Dade County Product Control Division (In Miami Dade County) and/or the AHJ (in areas other than Miami Dade County) reserve the right to have this product or material tested for quality assurance purposes. If this product or material fails to perform in the accepted manner, the manufacturer will incur the expense of such testing and the AHJ may immediately revoke, modify, or suspend the use of such product or material within their jurisdiction. BORA reserves the right to revoke this acceptance, if it is determined by Miami-Dade County Product Control Division that this product or material fails to meet the requirements of the applicable building code.

This product is approved as described herein, and has been designed to comply with the Florida Building Code, including the High Velocity Hurricane Zone.

DESCRIPTION: Series 5800 – 4.5" Deep Frame - Aluminum Curtain Wall System

APPROVAL DOCUMENT: Drawing No.**1050**, titled "Series 5800 Curtain Wall Impact System (4.5" Deep Frame)", sheets 1 through 6 of 6, dated 04/20/01 with revision A3 dated 04/09/03, prepared by W.W. Schaefer Engineering & Consulting, P.A., signed and sealed by Warren W. Schaefer, P.E., bearing the Miami-Dade County Product Control Revision stamp with the Notice of Acceptance number and expiration date by the Miami-Dade County Product Control Division.

MISSILE IMPACT RATING: Large and Small Missile Impact

LABELING: Each unit shall bear a permanent label with the manufacturer's name or logo, city, state and following statement: "Miami-Dade County Product Control Approved", unless otherwise noted herein.

RENEWAL of this NOA shall be considered after a renewal application has been filed and there has been no change in the applicable building code negatively affecting the performance of this product.

TERMINATION of this NOA will occur after the expiration date or if there has been a revision or change in the materials, use, and/or manufacture of the product or process. Misuse of this NOA as an endorsement of any product, for sales, advertising or any other purposes shall automatically terminate this NOA. Failure to comply with any section of this NOA shall be cause for termination and removal of NOA.

ADVERTISEMENT: The NOA number preceded by the words Miami-Dade County, Florida, and followed by the expiration date may be displayed in advertising literature. If any portion of the NOA is displayed, then it shall be done in its entirety.

INSPECTION: A copy of this entire NOA shall be provided to the user by the manufacturer or its distributors and shall be available for inspection at the job site at the request of the Building Official.

This NOA **revises NOA # 01-0525.04** and consists of this page 1and evidence pages E-1 and E-2, as well as approval document mentioned above.

The submitted documentation was reviewed by **Manuel Perez, P.E.**

PRODUCT CONTROL ACCEPTED

EFCO Corporation

NOTICE OF ACCEPTANCE: EVIDENCE SUBMITTED

A. DRAWINGS

1. Manufacturer's die drawings and sections.
2. Drawing No.**1050**, titled "Series 5800 Curtain Wall Impact System (4.5" Deep Frame)", sheets 1 through 6 of 6, dated 04/20/01 with revision A3 dated 04/09/03, prepared by W.W. Schaefer Engineering & Consulting, P.A., signed and sealed by Warren W. Schaefer, P.E.

B. TESTS

1. Test reports on 1)Uniform Static Air Pressure Test, Loading per FBC, TAS 202-94
   2) Large Missile Impact Test per FBC, TAS 201-94
   3) Cyclic Wind Pressure Loading per FBC, TAS 203-94
   along with installation diagram of **Specimen #1 (EFCO elevation A)**, a 6" deep aluminum curtain wall system with a 9/16" thick overall **Security Impact Glass *SAF-GLAS*** polycarbonate laminated glass (w/two ¼" HS lites), prepared by Hurricane Test Laboratory, Test Report No. **HTL-0046-0113-04,** dated 4/22/09, signed and sealed by Vinu J. Abraham, P.E.
2. Test reports on 1)Uniform Static Air Pressure Test, Loading per FBC, TAS 202-94
   2) Large Missile Impact Test per FBC, TAS 201-94
   3) Cyclic Wind Pressure Loading per FBC, TAS 203-94
   along with installation diagram of an aluminum curtain wall system and prepared by Hurricane Test Laboratory, Test Report No. **HTL- 0046-0202-00,** dated 2/14/00, signed and sealed by Vinu J. Abraham, P.E. ***Submitted under NOA# 01-0525.04***
3. Test reports on 1)Uniform Static Air Pressure Test, Loading per FBC, TAS 202-94
   2) Large Missile Impact Test per FBC, TAS 201-94
   3) Cyclic Wind Pressure Loading per FBC, TAS 203-94
   along with installation diagram of an aluminum curtain wall system and prepared by Hurricane Test Laboratory, Test Report No. **HTL- 0046-0202-00,** dated 2/14/00, signed and sealed by Vinu J. Abraham, P.E. ***Submitted under NOA# 01-0525.04***
4. Test reports on 1) Large Missile Impact Test per FBC, TAS 201-94
   2) Cyclic Wind Pressure Loading per FBC, TAS 203-94
   along with installation diagram of an aluminum curtain wall system and prepared by Hurricane Test Laboratory, Test Report No. **HTL-0046-0414-00,** dated 4/28/00, signed and sealed by Vinu J. Abraham, P.E. ***Submitted under NOA# 01-0525.04***
5. Test reports on 1)Uniform Static Air Pressure Test, Loading per FBC, TAS 202-94
   2) Large Missile Impact Test per FBC, TAS 201-94
   3) Cyclic Wind Pressure Loading per FBC, TAS 203-94
   along with installation diagram of a 3-bay specimen of a series S5600 8" deep outside glazed Curtain wall system, 176" wide x 128-1/2" high, specimen **#1**; prepared by Hurricane Test Laboratory, Test Report No. **HTL-0046-1019-03, Elevation A,** dated 10/20/03, s. and sealed by Vinu J. Abraham, P.E. ***Submitted under NOA# 01-0525.04***

Manuel Perez, P.E.
Product Control Examiner
NOA No 03-0611.17
Expiration Date: February 14, 2006
Approval Date: July 29, 2004

6. Test reports on 1)Uniform Static Air Pressure Test, Loading per FBC, TAS 202-94
   2) Large Missile Impact Test per FBC, TAS 201-94
   3) Cyclic Wind Pressure Loading per FBC, TAS 203-94
   along with installation diagram of a three-bays specimen of a series S5600 6" deep outside glazed Curtain wall system, 182-1/2" wide x 98" high, specimen **#2**; prepared by Hurricane Test Laboratory, Test Report No. **HTL-0046-0113-04, Elevation C,** dated 01/09-12/04, sealed by Vinu J. Abraham, P.E. ***(Submitted under NOA# 01-0525.04).***

C. CALCULATIONS

1. Anchor Calculations, dated 04/08/03 and revised on 05/17/04, prepared by W. W. Schaefer Engineering & Consulting, P.A., signed and sealed by Warren W. Schaefer, P.E.
2. Anchor Calculations and structural analysis, prepared by W. W. Schaefer Engineering & Consulting, P.A., dated 4/20/01, signed and sealed by Warren W. Schaefer, P.E. ***(Submitted under NOA# 01-0525.04)***

D. QUALITY ASSURANCE

1. Miami Dade Building Code Compliance Office (BCCO).

E. MATERIAL CERTIFICATIONS

Submitted under NOA# 01-0525.04

1. Notice of Acceptance No. **02-1205.03** issued to Security Impact Glass Holdings L.L.C. for "SAF-GLAS," dated 1/2/03, expiring on 12/16/07.
2. Notice of Acceptance No. **00-0524.06** issued to Nebula Glass International Inc. for "Glasslam Safety-Plus Laminated Glass," dated 9/21/00, expiring on 9/9/03.
3. Notice of Acceptance No. **00-0614.09** issued to Viracon Inc. for "HRG-2 Laminated Glass," dated 11/2/00, expiring on 10/16/03.
4. Notice of Acceptance No. **02-0115.03** issued to Globe Amerada Glass Co. for "Glass-Clad Polycarbonate," dated 2/7/02, expiring on 9/3/076
5. Notice of Acceptance No. **01-0205.02** issued to Solutia Inc. for "Saflex/Keepsafe Maximum," dated 5/17/01, expiring on 5/21/06.

F. STATEMENTS

1. Statement letter of conformance, dated April 24, 2001, signed and sealed by Warren W. Schaefer, P.E.
2. Statement letter of no financial interest, dated April 24, 2001, signed and sealed by Warren W. Schaefer, P.E.

G. OTHER

1. Notice of Acceptance No. **01-0525.04,** issued to EFCO Corporation, Series 5800 – 4.5" Deep Frame – Alum. Curtain Wall System, approved on 2/14/02, expiring on 2/14/06.

Manuel Perez, P.E.
Product Control Examiner
NOA No 03-0611.17
Expiration Date: February 14, 2006
Approval Date: July 29, 2004

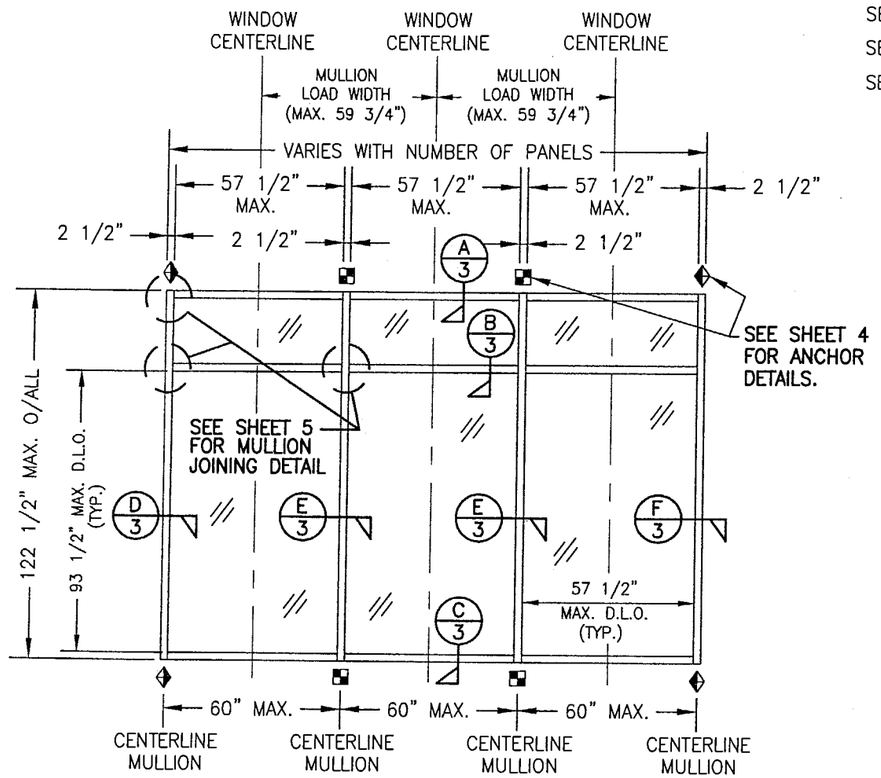

EXTERIOR ELEVATION

SCALE: 1/4"=1'-0"

NOTE: THIS ELEVATION SHOWS THE 5800 CURTAIN WALL SYSTEM IN A SINGLE SPAN APPLICATION. ALL SINGLE SPAN APPLICATIONS ARE LIMITED BY EACH THE D.L.O. SIZES OF THE LIGHTS & THE HEIGHT/SPAN SHOWN. HEIGHT MAY NOT EXCEED THAT SHOWN.

SEE SHEET 4 → ◆ = F OR TF–ANCHOR
SEE SHEET 4 → ■ = M OR TM–ANCHOR
SEE SHEET 5 → ● = DOOR JAMB MULLION SHEAR BLOCK ANCHOR

"F", "TF", "M", "TM" & SHEAR BLOCK ANCHOR FASTENER REQUIREMENTS TABLE

OPENING TYPE (SUBSTRATE)	ANCHOR TO OPENING FASTENER TYPE	NO. FASTENERS PER ANCHOR INTO SUBSTRATE		MINIMUM EMBED	MINIMUM EDGE DIST.
		SHEAR BLOCK ANCHORS	F, TF, M & TM ANCHORS		
WOOD	(1) 3/8" LAG SCREW	N/A	4	1.5"	1"
MIN. 16 GA. STUD	NO. 14 TEK SCREW	2	4	FULL	1/2"
STRUCT. STEEL	NO. 14 TEK SCREW	2	4	FULL	1/2"
CONCRETE	3/8" HILTI QUIK BOLT II S.S. EXPANSION ANCHOR OR 3/8" S.S. RAWL POWER–BOLT	2	4	2 1/2"	2 1/2"

(1) PREDRILL REQUIRED SIZE HOLES IN WOOD FOR PLACEMENT OF LAG SCREWS.

ALLOWABLE DESIGN LOADS & IMPACT RATING

GLAZING DESCRIPTION	IMPACT RATING	ALLOWABLE PRESSURE
5/8" VIRACON HRG2 LAMINATED HT. ST. GLASS	LARGE MISSILE	SEE LOAD TABLE
9/16" SOLUTIA SAFLEX PVB LAMINATED HT. ST. GLASS	SMALL MISSILE (1)	SEE LOAD TABLE
9/16" GLOBE CHEM TEMP LAMINATED GLASS	LARGE MISSILE	SEE LOAD TABLE (N.T.E. 60 PSF)
9/16" SECURITY SAF–GLAS LAMINATED HT. ST. GLASS	LARGE MISSILE	SEE LOAD TABLE
5/8" GLASSLAM SAFETY–PLUS LAMINATED HT. ST. GLASS	LARGE MISSILE	SEE LOAD TABLE

(1) SMALL MISSILE IMPACT WINDOWS MAY NOT BE INSTALLED WITHOUT AN APPROVED SHUTTER AT A SILL ELEVATION LESS THAN 30 FT. ABOVE GRADE.

GENERAL NOTES

1. THESE CURTAIN WALL SYSTEMS HAVE BEEN TESTED, ANALYZED AND APPROVED FOR DESIGN PRESSURES NOT TO EXCEED THOSE SHOWN IN THE "ALLOWABLE DESIGN LOADS" TABLE.
2. BUCKING, OPENINGS & BUCKING FASTENERS MUST BE PROPERLY DESIGNED & INSTALLED TO TRANSFER WIND LOADS TO THE STRUCTURE.
3. ALL HARDWARE & FASTENERS SHALL BE IN ACCORDANCE WITH THESE DRAWINGS & MAY NOT VARY UNLESS SPECIFICALLY MENTIONED ON THE DRAWINGS.
4. THE DETAILS & SPECIFICATIONS SHOWN HEREIN REPRESENT THE PRODUCTS TESTED & PROPOSED FOR WATER, AIR, IMPACT, CYCLIC & UNIFORM STATIC AIR PRESSURE TESTING IN CONFORMANCE WITH DADE COUNTY PROTOCOLS TAS 201, 202 & 203 FOR IMPACT REQUIREMENTS.
5. THESE CURTAIN WALL SYSTEMS HAVE BEEN DESIGNED IN ACCORDANCE WITH THE FLORIDA BUILDING CODE (FBC).
6. ALL ANCHORS SHALL BE INSTALLED AS SPECIFIED ON THESE DRAWINGS. SPECIFIED EMBEDMENT TO BASE MATERIAL SHALL BE BEYOND WALL FINISH OR STUCCO.
7. THERE SHALL BE NO LIMIT TO THE NUMBER OF HORIZONTAL & VERTICAL PANELS USED FOR ANY JOB PROVIDING ALL RESTRICTIONS ARE MET PER THE ELEVATIONS.
8. ALL SUBSTRATE SHALL HAVE THE FOLLOWING MINIMUM REQUIREMENTS.
   a) ALL CONCRETE SUBSTRATE SHALL BE MIN. 3000 PSI.
   b) ALL WOOD SUBSTRATE SHALL BE MIN. G = 0.55 DENSITY.
   c) ALL METAL STUD SUBSTRATE SHALL BE MIN. 16 GA. Fy = 50 ksi.
   d) ALL STRUCTURAL STEEL SUBSTRATE SHALL BE MIN. Fy = 36 ksi.

PRODUCT REVISED
as complying with the Florida Building Code
Acceptance No 03-0611.17
Expiration Date FEB. 14, 2006
By Manuel Perez
Miami Dade Product Control Division

DRAWN BY: W.W.S.	CHECKED BY: W.W.S.
PLOT: 1=48	DATE: 04/20/01

NO.	REVISION DESCRIPTION	BY	DATE
A1	ADDED DOOR OPENING CONDITION	K.P.S.	04/09/03
A2	ADDED TF & TM ANCHORS	K.P.S.	04/09/03
A3	INCREASED PRESSURE FOR GLOBE GLASS FOR PROPER LOAD MULTIPLIER	K.P.S.	04/09/03

DRAWING TITLE
SERIES 5800 CURTAIN WALL IMPACT SYSTEM (4.5" DEEP FRAME)

MANUFACTURER
EFCO CORPORATION
1000 COUNTY ROAD; P.O. BOX 609
MONETT, MO 65708–0609
800–221–4169

CONSULTANTS
W. W. SCHAEFER ENGINEERING & CONSULTING, P.A.
8895 N. MILITARY TRAIL; SUITE C–204
PALM BEACH GARDENS, FL 33410
PHONE: 561–775–4902 FAX: 561–775–4903

CERTIFICATION
AUG 12 2003
WARREN W. SCHAEFER, P.E.
P.E. NO. 44135

DRAWING NO.	REV.
1050	A

SHEET NO. 1 OF 6

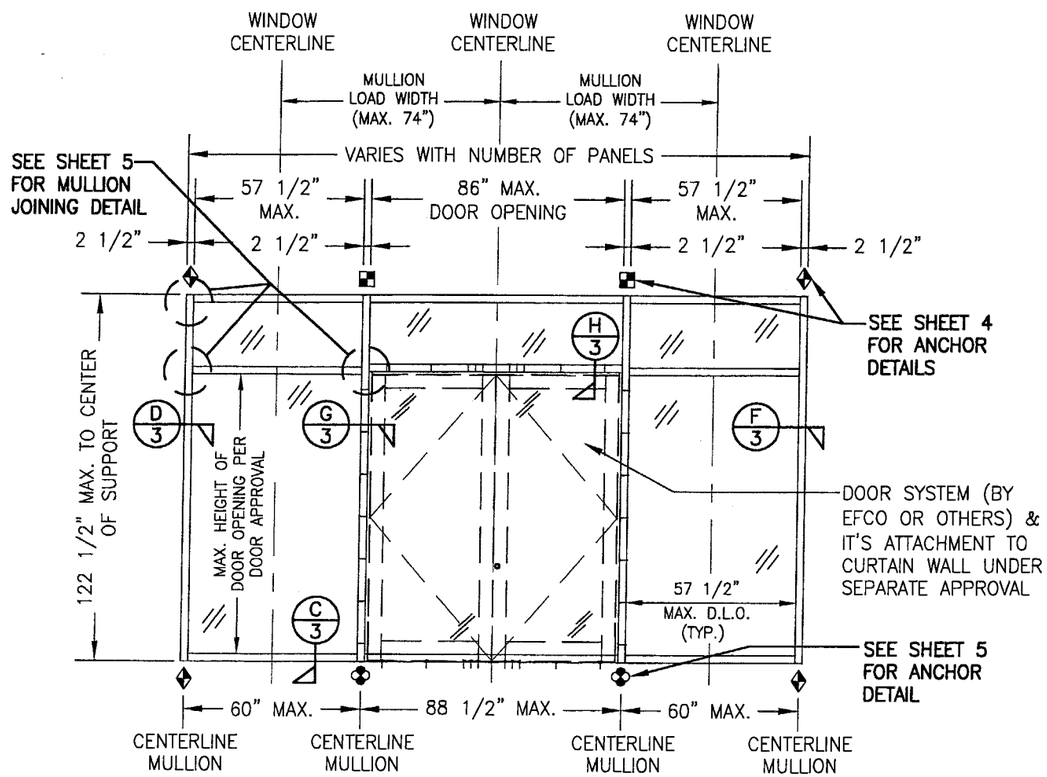

EXTERIOR ELEVATION SCALE: 1/4"=1'-0"

NOTE: THIS ELEVATION SHOWS THE 5800 CURTAIN WALL SYSTEM IN A SINGLE SPAN APPLICATION WITH A DOOR OPENING. ALL SINGLE SPAN APPLICATIONS ARE LIMITED BY EACH THE D.L.O. SIZES OF THE LIGHTS, THE DOOR OPENING SIZE & THE HEIGHT/SPAN SHOWN. HEIGHT MAY NOT EXCEED THAT SHOWN.

NOTE: CONDITIONS SHOWN ALSO APPLY TO SINGLE PANEL DOOR CONDITIONS.

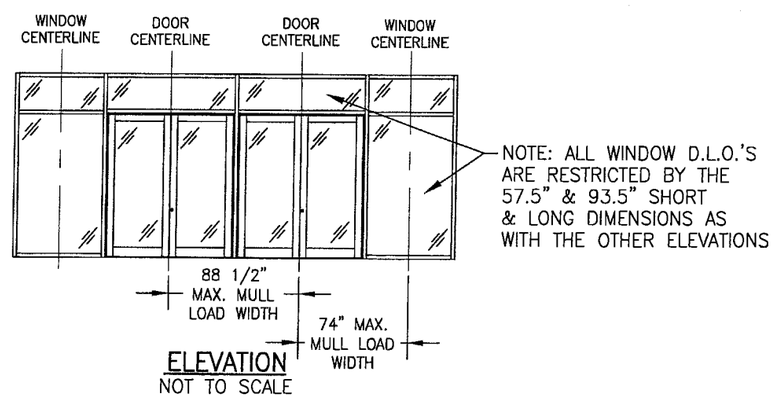

ELEVATION
NOT TO SCALE
(2 SIDE BY SIDE DOUBLE DOORS IN CURTAIN WALL)

ALLOWABLE DESIGN LOAD TABLE

MULLION HEIGHT	MAXIMUM MULLION LOAD WIDTH	ALLOWABLE DESIGN LOAD POSITIVE & NEGATIVE (PSF)
84" & LESS	54"	45.0
	60"	43.8
	66"	39.8
	74"	35.5
	80"	32.8
	88"	29.8
90"	54"	45.0
	60"	40.8
	66"	37.1
	74"	33.1
	80"	30.6
	88"	27.8
96"	48"	45.0
	54"	42.5
	60"	38.3
	66"	34.8
	74"	31.0
	80"	28.7
102"	48"	45.0
	54"	40.0
	60"	36.0
	66"	32.8
	74"	29.2
108"	36"	45.0
	42"	44.8
	48"	39.2
	54"	34.9
	60"	31.4
	66"	28.5
114"	30"	45.0
	36"	44.5
	42"	38.1
	48"	33.3
	54"	29.6
	60"	26.7
120"	30"	45.0
	36"	38.1
	42"	32.7
	48"	28.6
	54"	25.4
	60"	22.9
122.5"	24"	45.0
	30"	43.0
	36"	35.8
	42"	30.7
	48"	26.9
	54"	23.9
	60"	21.5

1) PRESSURES ARE FOR BOTH POSITIVE & NEGATIVE.
2) MULLION HEIGHT = UNIT O/ALL HEIGHT.
3) REGARDLESS OF LOAD WIDTHS SPECIFIED IN THIS TABLE, THE D.L.O. OF FIXED GLASS PANELS MAY NOT EXCEED 57 1/2" IN THEIR SHORT SIDE DIMENSION NOR 93 1/2" IN THEIR LONG SIDE DIMENSION.

PRODUCT REVISED
as complying with the Florida Building Code
Acceptance No. 03-0611.17
Expiration Date FEB. 14, 2006
By Manuel Sanz
Miami Dade Product Control Division

NO.	REVISION DESCRIPTION	BY	DATE
A1	ADDED DOOR OPENING CONDITION	K.P.S.	04/09/03
A2	ADDED TF & TM ANCHORS	K.P.S.	04/09/03
A3	INCREASED PRESSURE FOR GLOBE GLASS FOR PROPER LOAD MULTIPLIER	K.P.S.	04/09/03

DRAWN BY: W.W.S. | CHECKED BY: W.W.S.
PLOT: 1=48 | DATE: 04/20/01

DRAWING TITLE
SERIES 5800 CURTAIN WALL IMPACT SYSTEM (4.5" DEEP FRAME)

MANUFACTURER
EFCO CORPORATION
1000 COUNTY ROAD; P.O. BOX 609
MONETT, MO 65708-0609
800-221-4169

CONSULTANTS
W. W. SCHAEFER ENGINEERING & CONSULTING, P.A.
8895 N. MILITARY TRAIL; SUITE C-204
PALM BEACH GARDENS, FL 33410
PHONE: 561-775-4902 FAX: 561-775-4903

CERTIFICATION
AUG 12 2003
WARREN W. SCHAEFER, P.E.
P.E. NO. 44135

DRAWING NO. 1050 | REV. A
SHEET NO. 2 OF 6

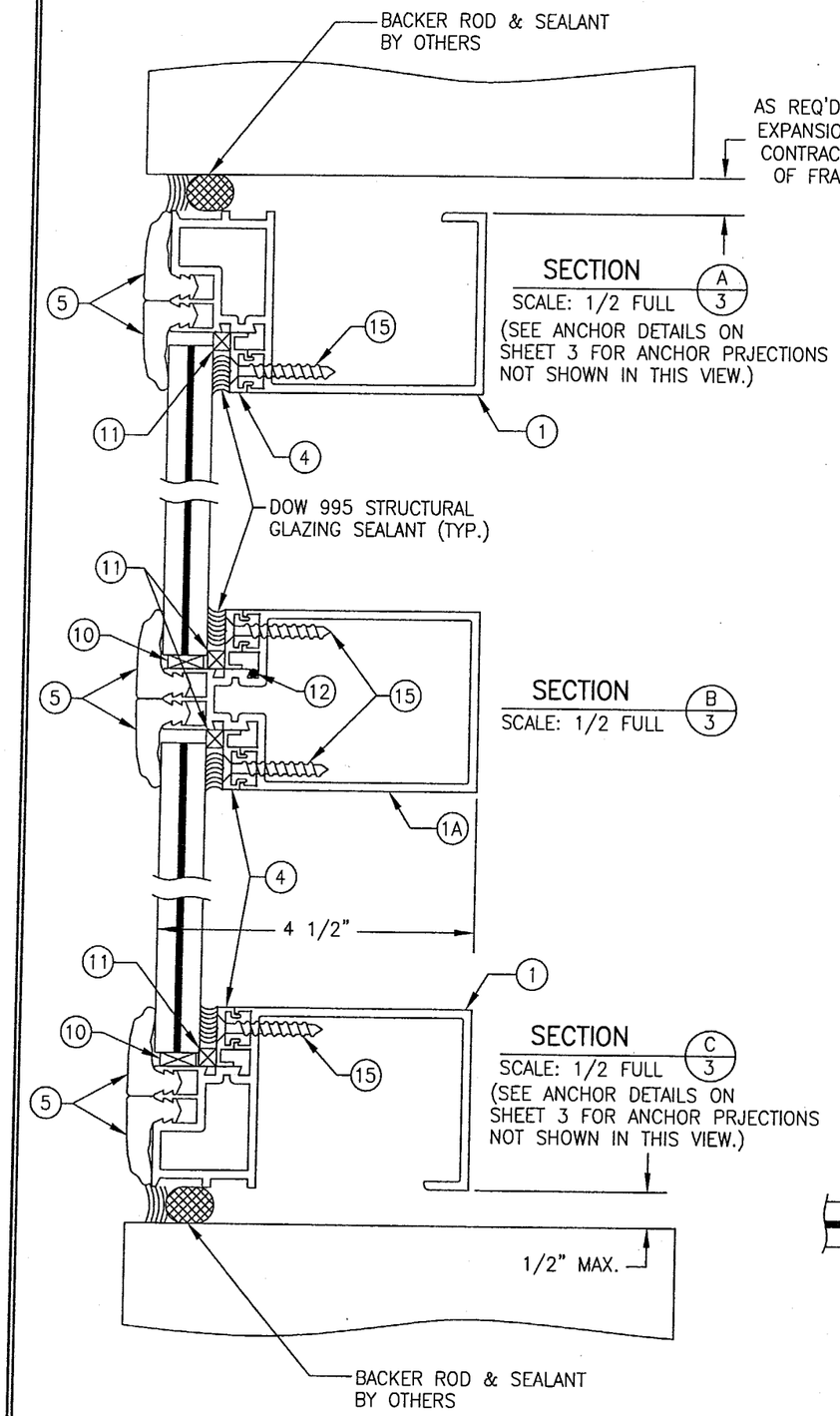

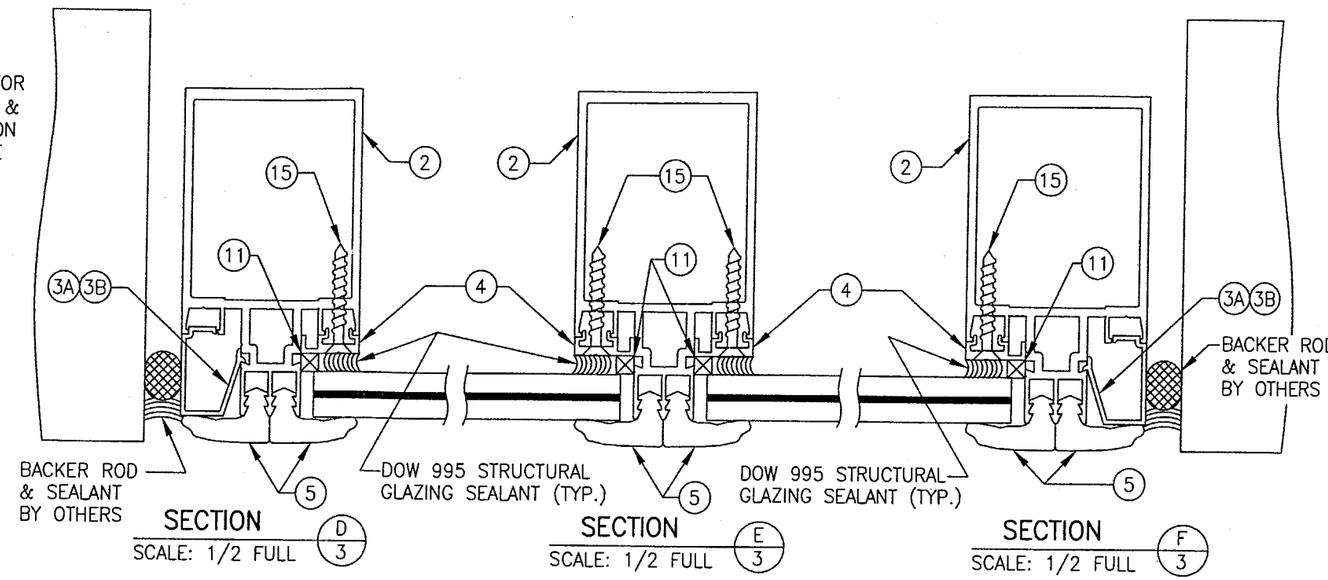

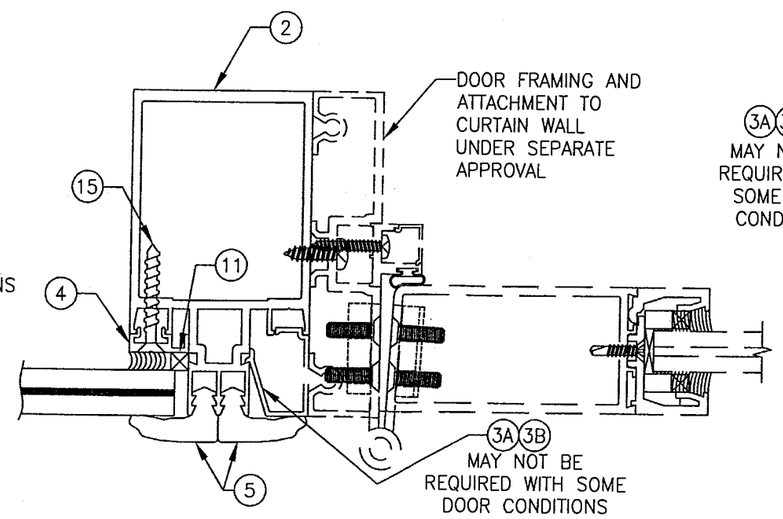

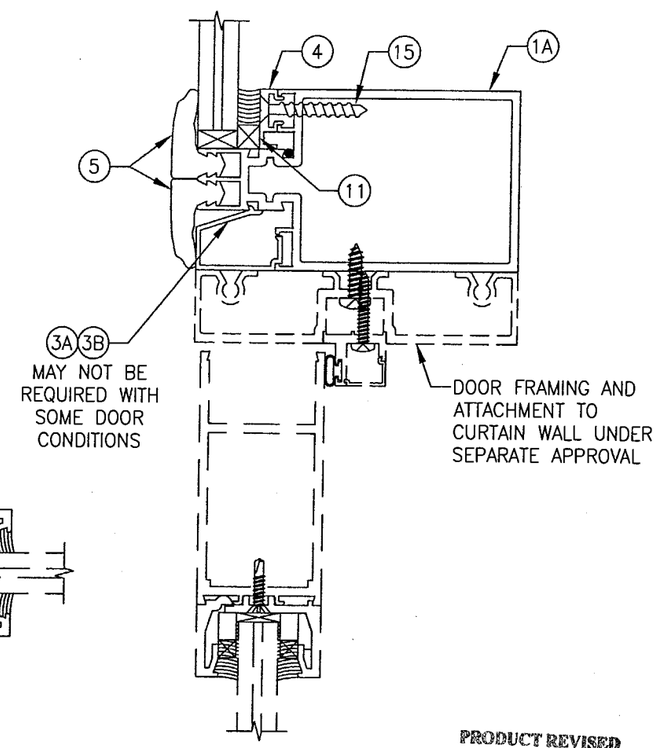

PRODUCT REVISED
as complying with the Florida Building Code
Acceptance No. 03-0611.17
Expiration Date FEB. 14, 2006
By Manuel Perez
Miami-Dade Product Control Division

DRAWN BY: W.W.S.	CHECKED BY: W.W.S.
PLOT: 1=2	DATE: 04/20/01

NO.	REVISION DESCRIPTION	BY	DATE

DRAWING TITLE
SERIES 5800 CURTAIN WALL IMPACT SYSTEM (4.5" DEEP FRAME)

MANUFACTURER
EFCO CORPORATION
1000 COUNTY ROAD; P.O. BOX 609
MONETT, MO 65708-0609
800-221-4169

CONSULTANTS
W. W. SCHAEFER ENGINEERING & CONSULTING, P.A.
8895 N. MILITARY TRAIL; SUITE C-204
PALM BEACH GARDENS, FL 33410
PHONE: 561-775-4902 FAX: 561-775-4903

CERTIFICATION
AUG 12 2003
WARREN W. SCHAEFER, P.E.
P.E. NO. 44135

DRAWING NO.	REV.
1050	A

SHEET NO. 3 OF 6

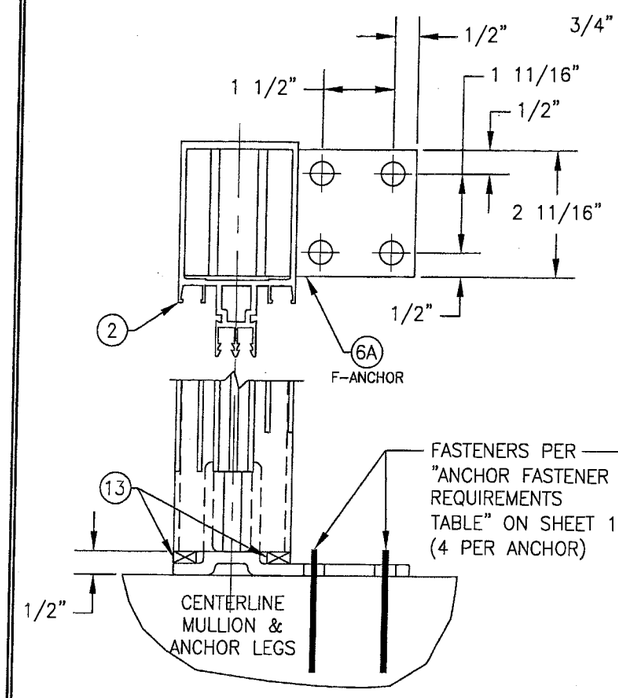

"F-ANCHOR" DETAIL

(TYP. AT SIDE JAMB MULLIONS)

NOTE: GLAZING & HORIZONTAL MEMBER NOT SHOWN FOR CLARITY

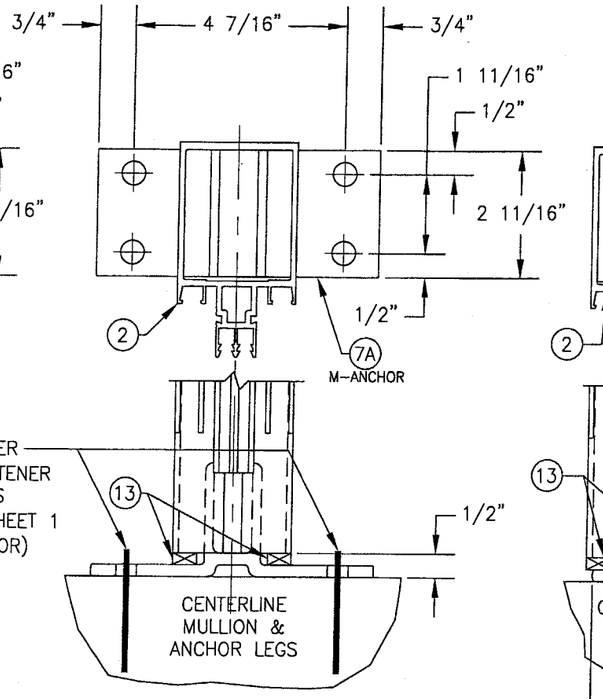

"M-ANCHOR" DETAIL

(TYP. AT INTERMEDIATE MULLIONS)

NOTE: GLAZING & HORIZONTAL MEMBER NOT SHOWN FOR CLARITY

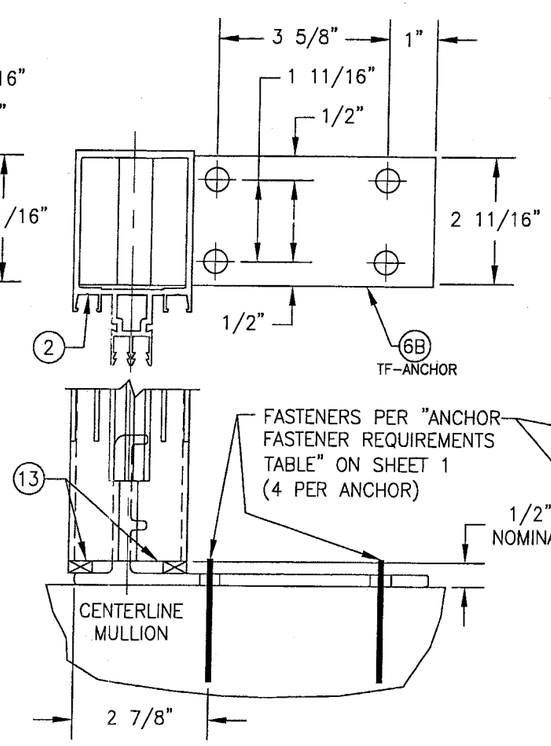

"TF-ANCHOR" DETAIL

(TYP. AT SIDE JAMB MULLIONS)

NOTE: GLAZING & HORIZONTAL MEMBER NOT SHOWN FOR CLARITY

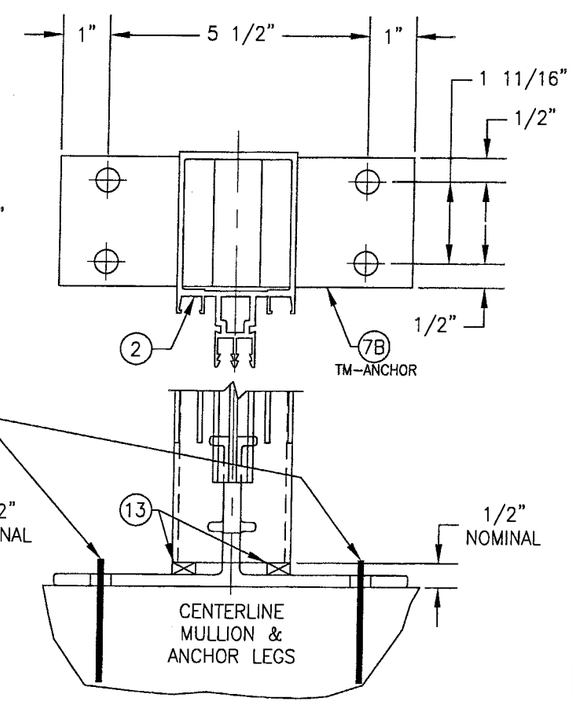

"TM-ANCHOR" DETAIL

(TYP. AT INTERMEDIATE MULLIONS)

NOTE: GLAZING & HORIZONTAL MEMBER NOT SHOWN FOR CLARITY

PRODUCT REVISED
as complying with the Florida Building Code
Acceptance No. 03-0611.17
Expiration Date FEB. 14, 2006
By Manuel Perez
Miami-Dade Product Control Division

DRAWN BY: W.W.S.	CHECKED BY: W.W.S.
PLOT: 1=3	DATE: 04/20/01

NO.	REVISION DESCRIPTION	BY	DATE

03-0611.17

DRAWING TITLE
SERIES 5800 CURTAIN WALL IMPACT SYSTEM (4.5" DEEP FRAME)

MANUFACTURER
EFCO CORPORATION
1000 COUNTY ROAD; P.O. BOX
MONETT, MO 65708-0609
800-221-4169

CONSULTANTS
W. W. SCHAEFER ENGINEERING & CONSULTING, P.A.
8895 N. MILITARY TRAIL; SUITE C-204
PALM BEACH GARDENS, FL 33410
PHONE: 561-775-4902 FAX: 561-775-4903

CERTIFICATION
AUG 12 2003
WARREN W. SCHAEFER, P.E.
P.E. NO. 44135

DRAWING NO.	REV.
1050	A

SHEET NO. 4 OF 6

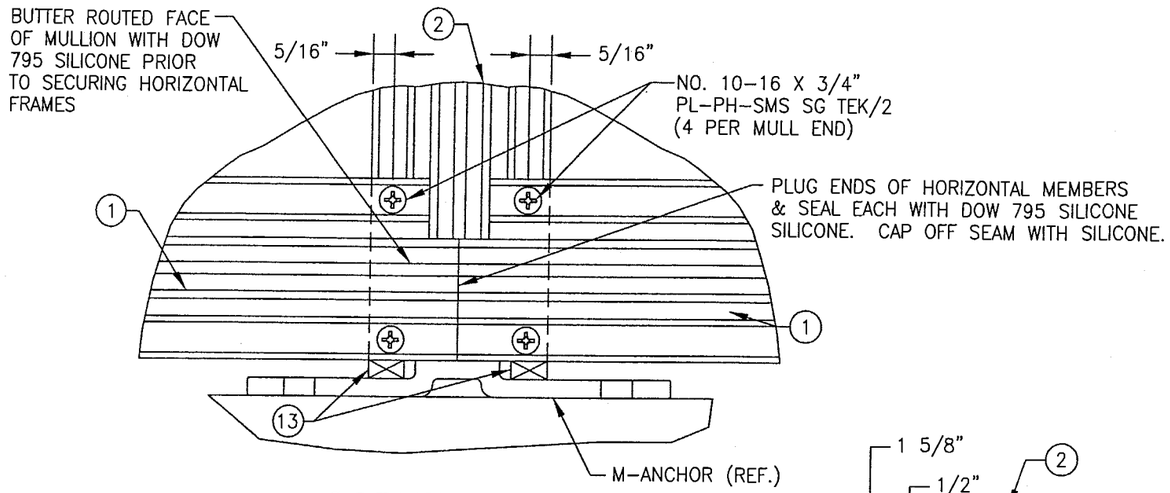

CORNER DETAIL INTERMEDIATE MULLION END

(TYP. AT HEAD & SILL)

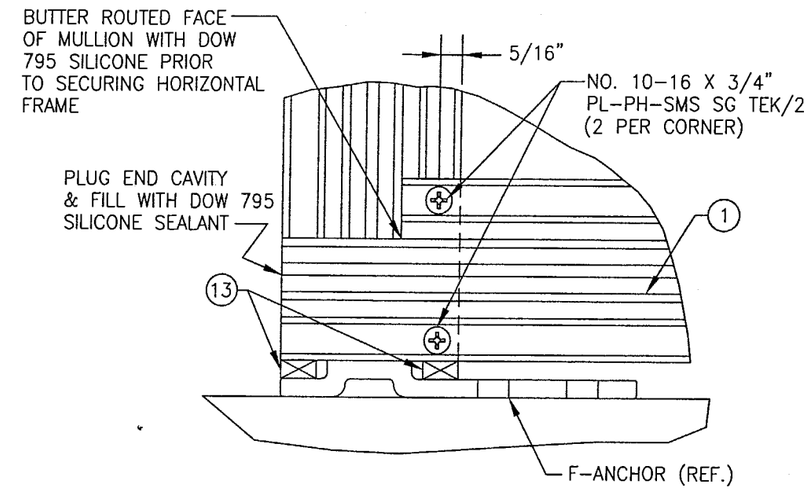

CORNER DETAIL JAMB MULLION END

(TYP. AT HEAD & SILL)

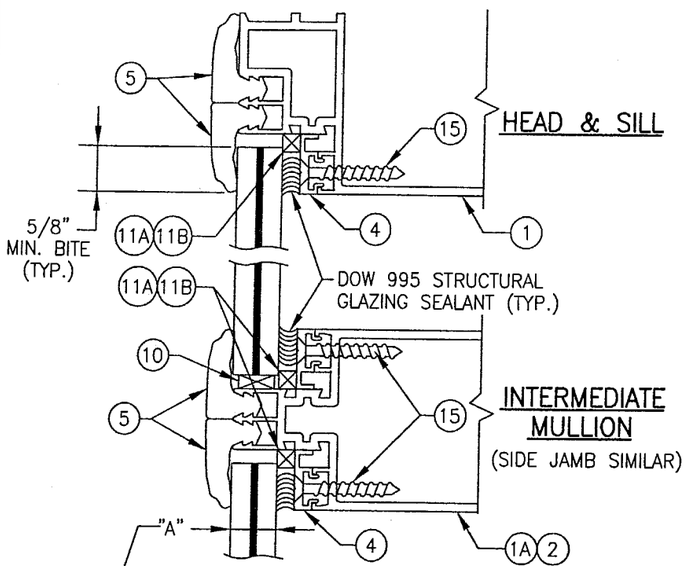

GLAZING DETAILS

1) 5/8" VIRACON HRG2: 1/4" HT. ST./0.05 URETHANE/ 0.08 POLYCARBONATE/0.05 URETHANE/1/4" HT. ST.
2) 9/16" SAFLEX: 1/4" HT. ST./0.06 SAFLEX PVB/ 1/4" HT. ST. (SMALL MISSILE GLASS)
3) 9/16" GLOBE AMERADA CHEM TEMP: 3/16" CHEM TEMP/0.035 URETHANE 0.118 POLYCARBONATE/0.035 URETHANE/3/16 CHEM TEMP
4) 9/16" SECURITY GLASS SAF-GLAS: 1/4" HT. ST./0.011 ALIPHATIC URETHANE/0.07 POLYCARBONATE/0.011 ALIPHATIC URETHANE/1/4" HT. ST.
5) 5/8" NEBULA GLASSLAM SAFETY-PLUS: 1/4" HT. ST./0.06 RESIN/ 0.01 PET/0.06 RESIN/1/4" HT. ST.

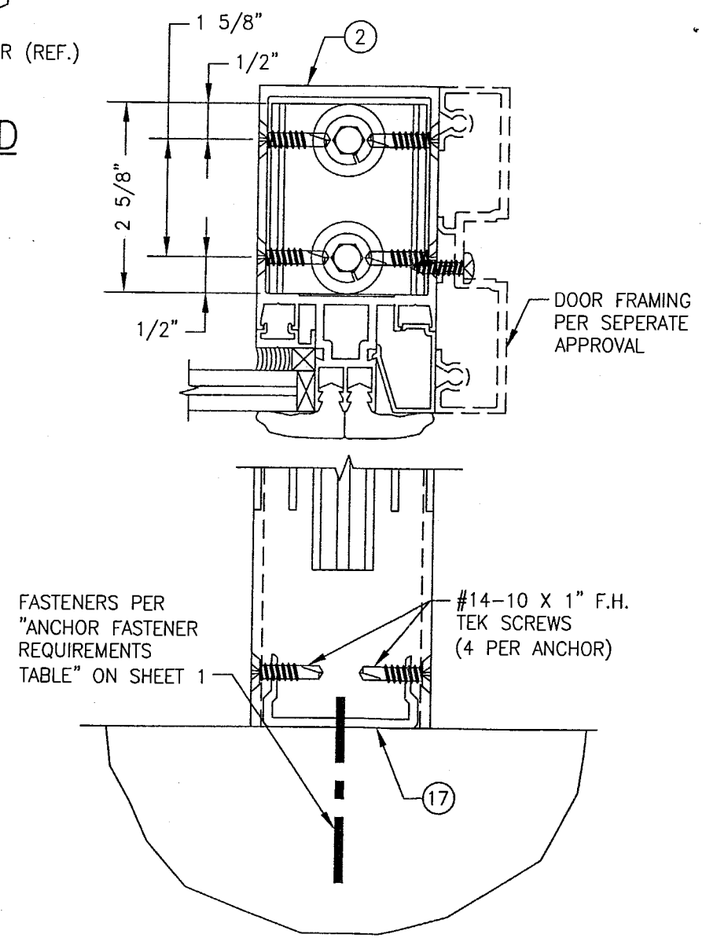

DOOR JAMB MULLION SHEAR BLOCK ANCHOR DETAIL

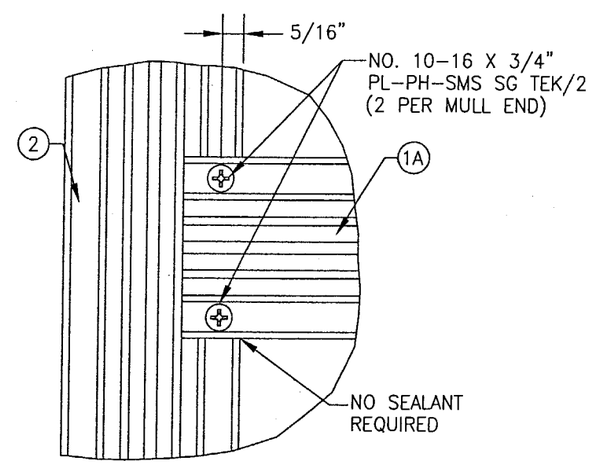

INTERSECTION DETAIL HORIZONTAL TO VERTICAL MULL

PRODUCT REVISED
as complying with the Florida Building Code
Acceptance No. 03-0611.17
Expiration Date FEB 14 2006
By Miami Dade Product Control Division

DRAWN BY: W.W.S.	CHECKED BY: W.W.S.
PLOT: 1=2	DATE: 04/20/01

NO.	REVISION DESCRIPTION	BY	DATE

DRAWING TITLE: SERIES 5800 CURTAIN WALL IMPACT SYSTEM (4.5" DEEP FRAME)

MANUFACTURER: EFCO CORPORATION, 1000 COUNTY ROAD; P.O. BOX 609, MONETT, MO 65708-0609, 800-221-4169

CONSULTANTS: W. W. SCHAEFER ENGINEERING & CONSULTING, P.A., 8895 N. MILITARY TRAIL; SUITE C-204, PALM BEACH GARDENS, FL 33410, PHONE: 561-775-4902 FAX: 561-775-4903

CERTIFICATION: AUG 12 2003

WARREN W. SCHAEFER, P.E. P.E. NO. 44135

DRAWING NO.	REV.
1050	A

SHEET NO. 5 OF 6

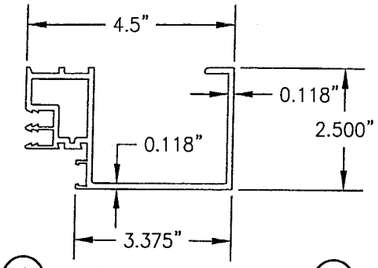

1 HEAD & SILL
1/3 FULL

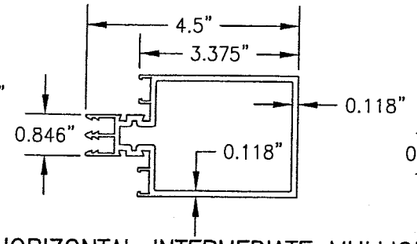

1A HORIZONTAL INTERMEDIATE MULLION
1/3 FULL

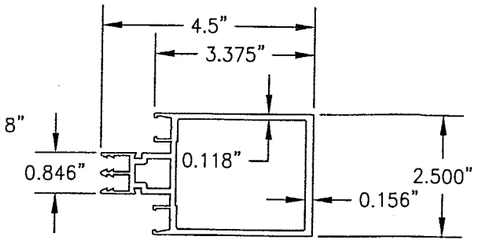

2 VERTICAL MULLION
1/3 FULL

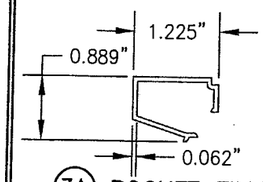

3A POCKET FILLER
1/2 FULL

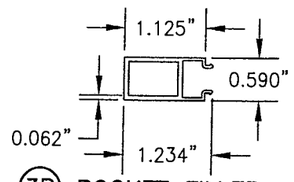

3B POCKET FILLER
1/2 FULL

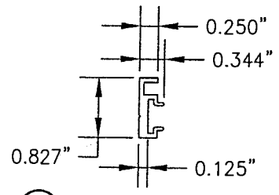

4 POCKET ADAPTER
1/2 FULL

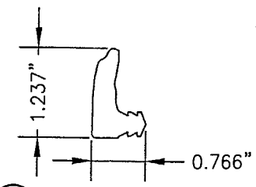

5 EXTERIOR GASKET
1/2 FULL

ITEM #	PART	ITEM DESCRIPTION	MANUFACTURER/NOTES
		PARTS	
1	5512	HEAD & SILL MULLION	EFCO; 6063-T6 ALUMINUM
1A	5514	HORIZONTAL INTERMEDIATE MULLION	EFCO; 6063-T6 ALUMINUM
2	5513	VERTICAL JAMB & INTERMEDIATE MULLION	EFCO; 6063-T6 ALUMINUM
3A	5515	POCKET FILLER	EFCO; 6063-T6 ALUMINUM
3B	3697	POCKET FILLER	EFCO; 6063-T6 ALUMINUM
4	6724	GLAZING POCKET ADAPTER	EFCO; 6063-T6 ALUMINUM
5	WG15	EXTERIOR GASKET; EXTRUDED SILICONE	JAMAK OR LAUREN
6A	6603	F-ANCHOR	EFCO; 6063-T6 ALUMINUM
6B	3709	TF-ANCHOR	EFCO; 6063-T6 ALUMINUM
7A	6604	M-ANCHOR	EFCO; 6063-T6 ALUMINUM
7B	3708	TM-ANCHOR	EFCO; 6063-T6 ALUMINUM
10	HDR6	.25"X.562"X4" SILICONE SETTING BLOCK	EPG SCR-880
11A	–	1/4"X5/16" POLY FOAM TAPE	NORTON V2200 (W/ 9/16" GLASS)
11B	–	1/4"X1/4" POLY FOAM TAPE	NORTON V2200 (W/ 5/8" GLASS)
12	WDR1	CONDENSATION WICK	PHOENIX ROPE
13	HS01	POLYSTRENE SHIM	PLYMOUTH PLASTICS
14	–	1/2" THK. MULLION SPLICE GASKET	CLOSED CELL SPUNGE NEOPRENE
15	STL3	#10-16 X 1.5" PL-FH-SMS 410 TEK	2" FROM ENDS & MAX. 9" O.C.
16	SDR1	#10-16 X .75" PL-PH-SMS SG TEK/2	CORNER SCREWS
17	7840	DOOR JAMB SHEAR BLOCK ANCHOR	6063-T6 ALUMINUM

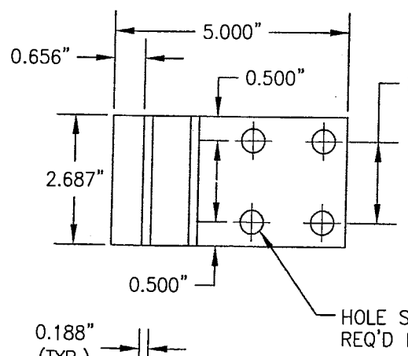

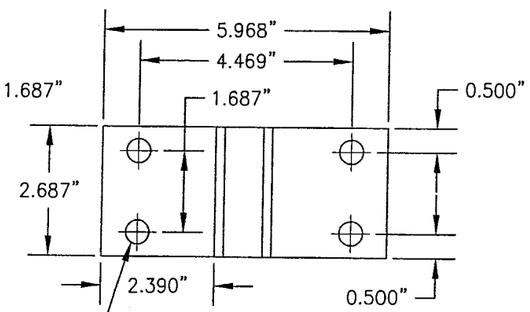

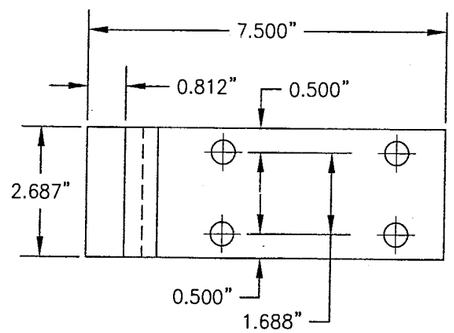

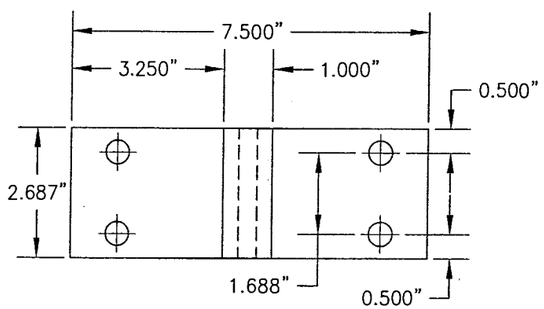

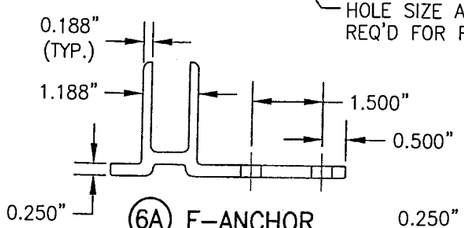

6A F-ANCHOR
1/3 FULL

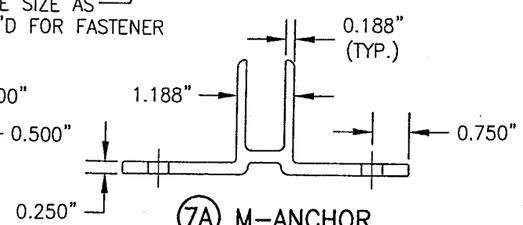

7A M-ANCHOR
1/3 FULL

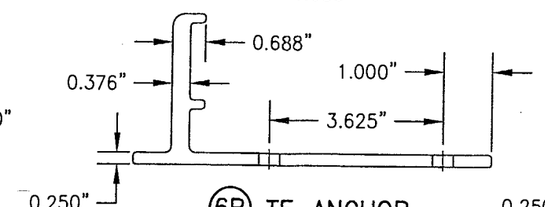

6B TF-ANCHOR
1/3 FULL

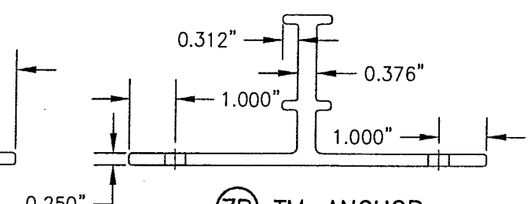

7B TM-ANCHOR
1/3 FULL

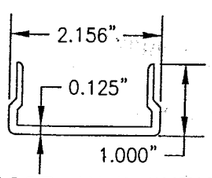

17 DOOR JAMB SHEAR BLOCK ANCHOR
1/2 FULL
LENGTH = 2 11/16"

PRODUCT REVISED
as complying with the Florida Building Code
Acceptance No. 03-0611.17
Expiration Date FEB. 14, 2006
By Manuel Perez
Miami-Dade Product Control Division

DRAWN BY: W.W.S.	CHECKED BY: W.W.S.
PLOT: 1=2	DATE: 04/20/01

NO.	REVISION DESCRIPTION	BY	DATE

DRAWING TITLE
SERIES 5800 CURTAIN WALL IMPACT SYSTEM (4.5" DEEP FRAME)

MANUFACTURER
EFCO CORPORATION
1000 COUNTY ROAD; P.O. BOX 609
MONETT, MO 65708-0609
800-221-4169

CONSULTANTS
W. W. SCHAEFER ENGINEERING & CONSULTING, P.A.
8895 N. MILITARY TRAIL; SUITE C-204
PALM BEACH GARDENS, FL 33410
PHONE: 561-775-4902 FAX: 561-775-4903

CERTIFICATION
AUG 12 2003
WARREN W. SCHAEFER, P.E.
P.E. NO. 44135

DRAWING NO.	REV.
1050	A

SHEET NO. 6 OF 6