MIAMI-DADE

BUILDING CODE COMPLIANCE OFFICE (BCCO)
PRODUCT CONTROL DIVISION

MIAMI-DADE COUNTY, FLORIDA
METRO-DADE FLAGLER BUILDING
140 WEST FLAGLER STREET, SUITE 1603
MIAMI, FLORIDA 33130-1563
(305) 375-2901 FAX (305) 375-2908

NOTICE OF ACCEPTANCE (NOA)

Andersen Corporation
100 Fourth Avenue North
Bayport, MN 55003-1096

SCOPE:
This NOA is being issued under the applicable rules and regulations governing the use of construction materials. The documentation submitted has been reviewed by Miami-Dade County Product Control Division and accepted by the Board of Rules and Appeals (BORA) to be used in Miami Dade County and other areas where allowed by the Authority Having Jurisdiction (AHJ).

This NOA shall not be valid after the expiration date stated below. The Miami-Dade County Product Control Division (In Miami Dade County) and/or the AHJ (in areas other than Miami Dade County) reserve the right to have this product or material tested for quality assurance purposes. If this product or material fails to perform in the accepted manner, the manufacturer will incur the expense of such testing and the AHJ may immediately revoke, modify, or suspend the use of such product or material within their jurisdiction. BORA reserves the right to revoke this acceptance, if it is determined by Miami-Dade County Product Control Division that this product or material fails to meet the requirements of the applicable building code.

This product is approved as described herein, and has been designed to comply with the High Velocity Hurricane Zone of the Florida Building Code.

DESCRIPTION: Series Frenchwood Double "AP/PA" Outswing Fiberglass Clad Wood French Patio Door

APPROVAL DOCUMENT: Drawing No. **DADE-FWO-AP-Impact**, titled "Frenchwood Outswing (FWO) Patio Door Unit - Impact AP 2-Panel", sheets 1 through 4 of 4, prepared by manufacturer, dated 8/18/03, with revision 8/18/03, bearing the Miami-Dade County Product Control Revision stamp with the Notice of Acceptance number and expiration date by the Miami-Dade County Product Control Division.

MISSILE IMPACT RATING: Large and Small Missile Impact

LABELING: Each unit shall bear a permanent label with the manufacturer's name or logo, city, state and following statement: "Miami-Dade County Product Control Approved", unless otherwise noted herein.

RENEWAL of this NOA shall be considered after a renewal application has been filed and there has been no change in the applicable building code negatively affecting the performance of this product.

TERMINATION of this NOA will occur after the expiration date or if there has been a revision or change in the materials, use, and/or manufacture of the product or process. Misuse of this NOA as an endorsement of any product, for sales, advertising or any other purposes shall automatically terminate this NOA. Failure to comply with any section of this NOA shall be cause for termination and removal of NOA.

ADVERTISEMENT: The NOA number preceded by the words Miami-Dade County, Florida, and followed by the expiration date may be displayed in advertising literature. If any portion of the NOA is displayed, then it shall be done in its entirety.

INSPECTION: A copy of this entire NOA shall be provided to the user by the manufacturer or its distributors and shall be available for inspection at the job site at the request of the Building Official.
This NOA **revises NOA # 03-0415.15** and consists of this page 1 as well as approval document mentioned above.
The submitted documentation was reviewed by **Manuel Perez, P.E.**

PRODUCT CONTROL ACCEPTED

Andersen Corporation

NOTICE OF ACCEPTANCE: EVIDENCE SUBMITTED
(For File ONLY. Not part of NOA)

A. DRAWINGS

1. Manufacturer's die drawings and sections.
2. Drawing No. **DADE-FWO-AP-Impact**, titled "Frenchwood Outswing (FWO) Patio Door Unit – Impact AP 2-Panel", sheets 1 through 4 of 4, dated 8/18/03 with revision E dated 8/18/03, prepared by manufacturer.

B. TESTS

1. Test reports on 1) Air Infiltration Test, per FBC, TAS 202-94
   2) Uniform Static Air Pressure Test, Loading per FBC,TAS 202-94
   3) Water Resistance Test, per FBC, TAS 202-94
   4) Large Missile Impact Test per FBC, TAS 201-94
   5) Cyclic Wind Pressure Loading per FBC, TAS 203-94
   6) Forced Entry Test, per FBC 2411 3.2.1 and TAS 202-94

   along with marked-up drawings and installation diagram of outswing wood patio door, prepared by Architectural Testing, Inc., Test Report No. **ATI 02-44377.01**, dated 5/1/03, signed and sealed by Steven Urich, P.E.
2. Test reports on 1) Air Infiltration Test, per FBC, TAS 202-94
   2) Uniform Static Air Pressure Test, Loading per FBC,TAS 202-94
   3) Water Resistance Test, per FBC, TAS 202-94
   4) Large Missile Impact Test per FBC, TAS 201-94
   5) Cyclic Wind Pressure Loading per FBC, TAS 203-94
   6) Forced Entry Test, per FBC 2411 3.2.1 and TAS 202-94

   along with marked-up drawings and installation diagram of outswing wood patio door, prepared by Architectural Testing, Inc., Test Report No. **ATI 02-44376.01**, dated 5/1/03, signed and sealed by Steven Urich, P.E. ***(Submitted under NOA #00-1011.04)***
3. Test reports on 1) Large Missile Impact Test per FBC, TAS 201-94
   2) Cyclic Wind Pressure Loading per FBC, TAS 203-94

   along with marked-up drawing of a wood French door, prepared by Architectural Testing, Inc. Test Report No. **ATI-02-32062.01**, dated 05/05/00 along with revised marked-up drawings, signed and sealed by Allen N. Reeves, P.E.
   (Submitted under NOA #00-0605.01)
4. Test reports on 1) Air Infiltration Test, per FBC, TAS 202-94
   2) Uniform Static Air Pressure Test, Loading per FBC,TAS 202-94
   3) Water Resistance Test, per FBC, TAS 202-94
   4) Large Missile Impact Test per FBC, TAS 201-94
   5) Cyclic Wind Pressure Loading per FBC, TAS 203-94
   6) Forced Entry Test, per FBC 2411 3.2.1 and TAS 202-94

   along with installation diagram of door prepared by Architectural Testing Inc., Report No. **02-31994.01**, dated 01/25/00, tested on 01/04/00, signed and sealed by Allen Reeves, P.E.

Manuel Perez, P.E.
Product Control Examiner
NOA No 03-0625.02
Expiration Date: October 5, 2008
Approval Date: September 11, 2003

Andersen Corporation

NOTICE OF ACCEPTANCE: EVIDENCE SUBMITTED

(For File ONLY. Not part of NOA)

B. CALCULATIONS

Submitted under NOA #03-0415.15

1. Anchor calculations and structural analysis dated April 9, 2003.

Submitted under NOA #00-1011.04

2. Anchor calculations and structural analysis prepared by Richard Boyette, P.E, for Andersen Corporation, dated April 24, 2000, signed and sealed by Richard Boyette, P.E.

C. MATERIAL CERTIFICATIONS

Submitted under NOA# 98-0608.21

1. Notice of Acceptance No. **01-1204.01** issued to E.I. DuPont DeNemours for "Sentry Glass Plus" dated 01/17/02, expiring on 01/14/07.
2. Notice of Acceptance No. **01-0205.02** issued to Solutia Inc. for their "Saflex /Keepsafe Maximum" dated 05/17/01, expiring on 05/21/06.

D. STATEMENTS

1. Statement letter of no financial interest, dated 4/1/03, signed by Humayoun Farooq, P.E.
2. Statement letter of conformance, dated 4/1/03, signed by Humayoun Farooq, P.E.
3. Laboratory compliance letter for Test Report no. **ATI 02-44377.01 & ATI 02-44376.01**, issued by Architectural Testing, Inc., dated 5/2/03, signed and sealed by Steven Urich, P.E.

F. OTHER

1. Notice of Acceptance No. **03-0415.15,** issued to Andersen Corporation, Series "Frenchwood Hinged AP/PA" Outswing Wood French Door, approved on 5/22/03 and expiring on 10/5/08.

Manuel Perez, P.E.
Product Control Examiner
NOA No 03-0625.02
Expiration Date: October 5, 2008
Approval Date: September 11, 2003

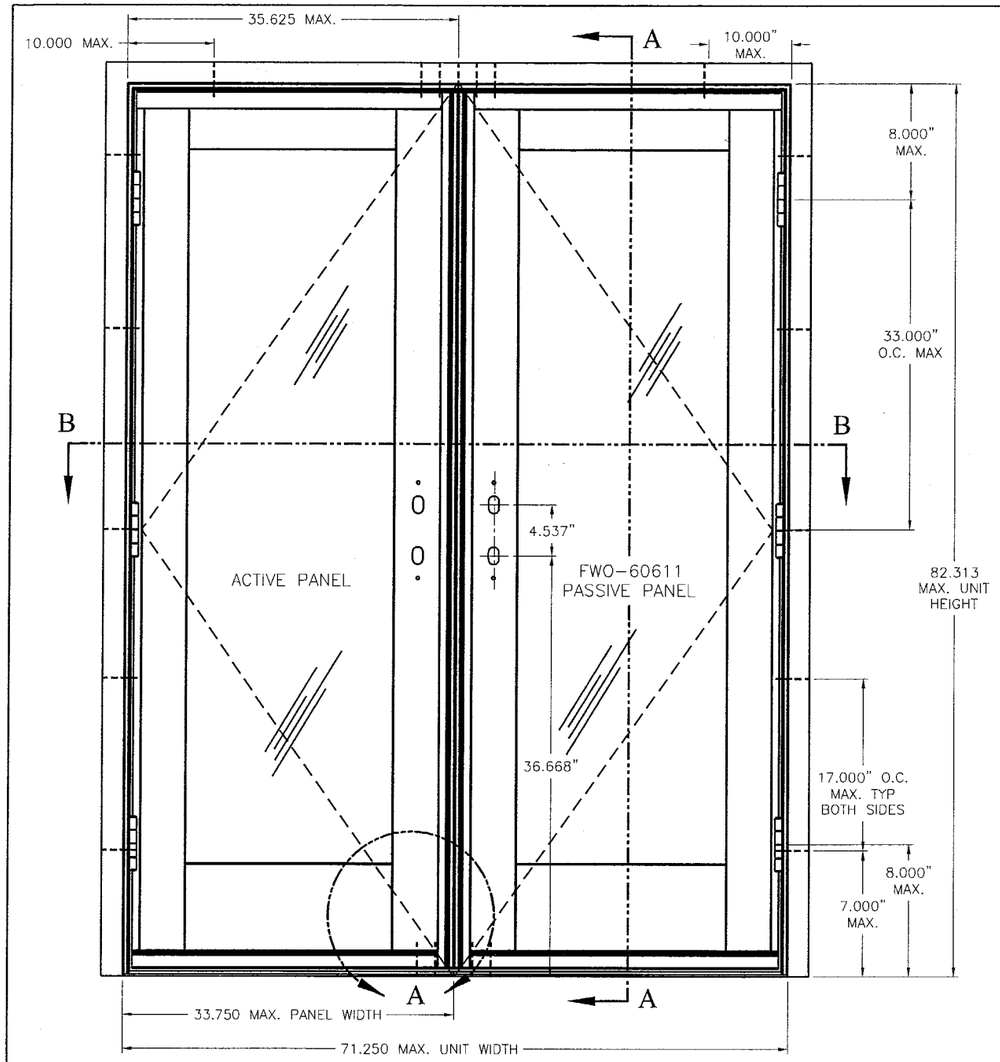

VIEWED FROM EXTERIOR

FWO-60611	+65/-80
FWO-54611	+65/-80
FWO-50611	+65/-80
FWO-41611	+65/-80
FWO-6068	+65/-80
FWO-5468	+65/-80
FWO-5068	+65/-80
FWO-4168	+65/-80
UNIT DES.	DP RATINGS (PSF)

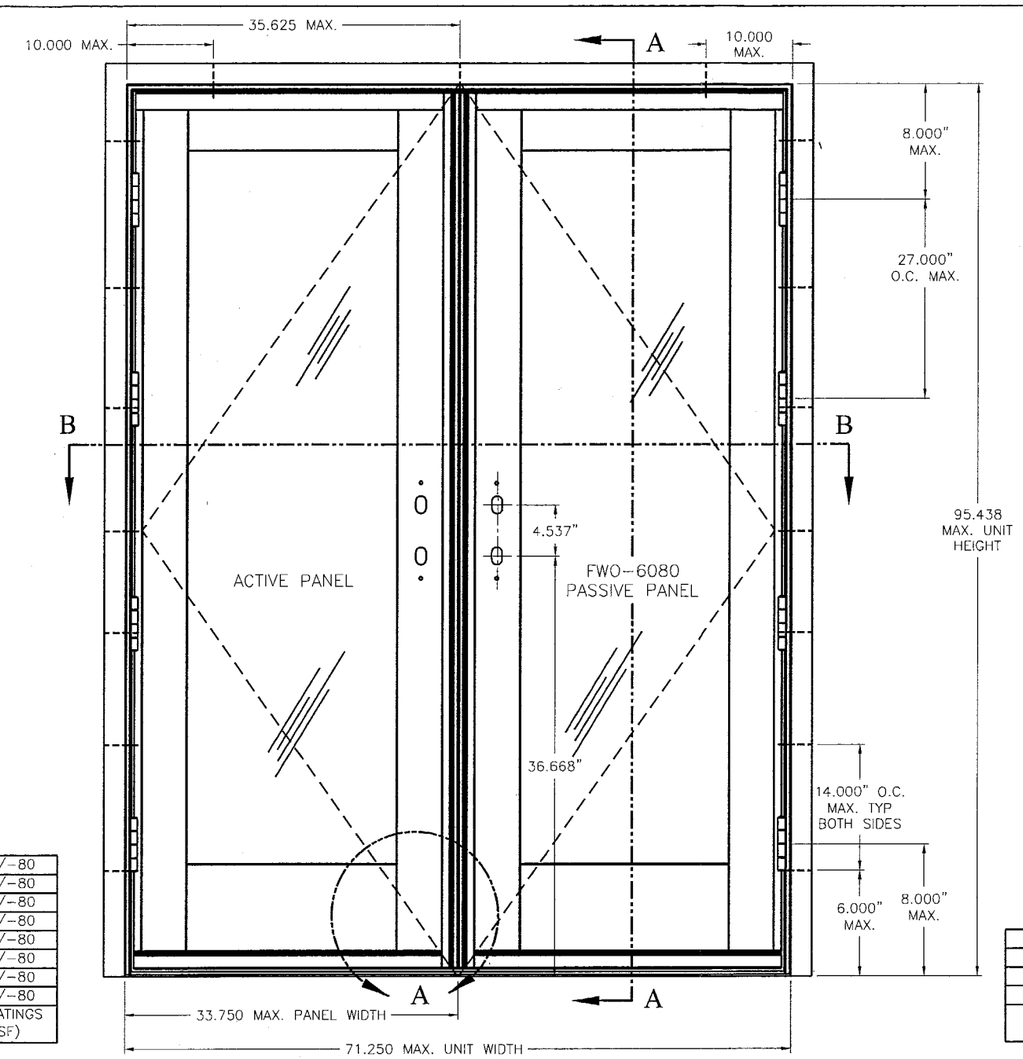

VIEWED FROM EXTERIOR

FWO-6080	+65/-65
FWO-5480	+65/-65
FWO-5080	+65/-65
FWO-4180	+65/-65
UNIT DES.	DP RATINGS (PSF)

NOTES:

1. INSTALLATION METHODS:
   SILL: SILL IS SET IN SILICONE BACKBEDDING AND ONE 1/4" TAPCON FASTENER, ADDITIONALLY FOUR 1/4" TAPCON FASTENERS THROUGH THE LOCK RECEIVER INTO THE SUBSTRATE.
   HEAD: HEAD IS SECURED WITH THREE 1/4" TAPCON SCREWS INTO MASONRY OR #10 SMS INTO WOOD AT 10" FROM EACH END AND ONE AT MIDSPAN, ADDITIONALLY SIX 1/4" TAPCON SCREWS THROUGH THE LOCK RECEIVER INTO THE SUBSTRATE.
   JAMBS: JAMBS ARE SECURED USING 1/4" TAPCON SCREWS INTO MASONRY OR #10 SMS INTO WOOD. FASTENERS ARE SPACED AT 7" FROM ENDS AND 17" MAX. O.C. FOR THE 611 AND 68 DOORS AND SPACED AT 6" FROM ENDS AND 14" MAX. O.C. FOR 80 DOORS.
   MASONRY: TAPCON SPACING IS THE SAME AS WOOD SCREW SPACING.

2. GLAZING SPECIFICATIONS:
   HEAT STRENGTHENED: THE UNITS UTILIZE 3/8" THICK LAMINATED GLASS FABRICATED AND COMPOSED OF TWO NOMINAL 5/32" HEAT-STRENGTHENED SHEETS WITH A .090 PVB GRAY OR CLEAR INNER LAYER MANUFACTURED BY DUPONT OR SOLUTIA.

   ANNEALED: THE UNITS UTILIZE 17/32" (.532) NOMINAL THICK LAMINATED GLASS FABRICATED AND COMPOSED OF TWO NOMINAL 7/32" ANNEALED SHEETS WITH A .090" PVB GRAY OR CLEAR INNER LAYER MANUFACTURED BY DUPONT OR SOLUTIA.

   GLAZING METHOD:
   THE GLASS IS SET FROM THE INTERIOR AGAINST A ONE OR TWO COMPONENT BED OF SILICONE. A TWO COMPONENT SILICONE BACKFILL WAS APPLIED TO THE INTERIOR PERIMETER, WITH WOOD STOPS UTILIZED ON THE INTERIOR, SECURED WITH 1.500" STAPLES SPACED 8.000" O.C. UNLESS WITHIN 14.000" OF CORNER, THEN 4.000" O.C.

3. FRAME CONSTRUCTION:
   FRAME JAMBS AND HEAD CONSISTED OF PONDEROSA PINE WITH PULTRUDED EXTERIOR CLADDING; THE SILL CONSISTED OF AN ALUMINUM AND PVC ASSEMBLY. WOOD CORNERS WERE COPED, BUTTED AND FASTENED WITH FOUR #10 X 2-1/2" LONG SCREWS PER HEAD JAMB CORNER AND FOUR #10 X 2-1/2" LONG SCREWS PER SILL JAMB CORNER, AND WERE SEALED WITH SILICONE. THE EXTERIOR PULTRUDED CLADDING CORNERS WERE MITER CUT AT THE HEAD, ASSEMBLED WITH CORNER KEY AND TWO #6 X 0.625" SCREWS. SEALED WITH SILICONE AND COPED AT THE SILL.

4. PANEL CONSTRUCTION:
   THE PANEL RAILS CONSISTED OF PONDEROSA PINE WITH THE STILES BEING AN LVL COMPOSITE AND CONTAINED BLIND MORTISE-AND-TENON, DOWELED AND GLUED CORNER CONSTRUCTION, AND FOUR #10 X 5.000" SCREWS INTO THE TOP AND BOTTOM STILE/RAIL JOINTS. A PULTRUDED DRIP CAP WAS USED ON THE BOTTOM OF EACH PANEL.

   ASTRAGAL: A PULTRUDED ASTRAGAL WAS SECURED TO THE EXTERIOR OF THE ACTIVE PANEL MEETING STILE WITH SILICONE AND SIX #10 X 3-1/2" SCREWS, LOCATED TWO PER LOCK RECEIVER.

5. WEATHERSTRIPPING:
   ONE ROW OF SANTOPRENE BULB AT THE PERIMETER OF THE PANEL.

PRODUCT REVISED
as complying with the Florida Buiding Code
Acceptance No 03-0625.02
Expiration Date OCT. 5, 2008
By Manuel Perez
Miami Dade Product Control Division

E	8/18/03
D	7/29/03
C	4/14/03
B	1/17/01
A	5/5/00
REVISION	

TITLE
FRENCHWOOD OUTSWING (FWO)
PATIO DOOR UNIT-IMPACT
AP 2-PANEL

Andersen Corporation
Bayport, Minnesota 55003

THESE DRAWINGS ARE PROVIDED AS A SERVICE BY ANDERSEN CORPORATION FOR THE BENEFIT OF ITS CUSTOMERS. FINAL RESPONSIBILITY FOR ACCURACY OF DESIGN, FINAL SPECIFICATIONS, DRAWINGS AND FOR THE ACTUAL INSTALLATION SUGGESTED BY THESE DRAWINGS LIES WITH THE ARCHITECT, ENGINEER AND/OR CONTRACTOR.

COPYRIGHT ANDERSEN CORPORATION 1998. ALL RIGHTS RESERVED.

APPROVE/DATE 8/18/03

DRAWING NUMBER DADE-FWO-AP-IMPACT

SHT. 1 OF 4

UNIT DES.	WIDTH	HEIGHT
FWO-6080	71.250	95.438
FWO-5480	63.250	95.438
FWO-5080	59.250	95.438
FWO-4180	48.000	95.438
FWO-60611	71.250	82.313
FWO-54611	63.250	82.313
FWO-50611	59.250	82.313
FWO-41611	48.000	82.313
FWO-6068	71.250	79.438
FWO-5468	63.250	79.438
FWO-5068	59.250	79.438
FWO-4168	48.000	79.438

UNIT DIMENSIONS

PANEL DES.	WIDTH	HEIGHT
FWO-3180	33.750	94.069
FWO-2980	29.750	94.069
FWO-2780	27.750	94.069
FWO-2180	22.125	94.069
FWO-3180	33.750	80.944
FWO-2980	29.750	80.944
FWO-2780	27.750	80.944
FWO-2180	22.125	80.944
FWO-3180	33.750	78.069
FWO-2980	29.750	78.069
FWO-2780	27.750	78.069
FWO-2180	22.125	78.069

PANEL DIMENSIONS

ITEM NO.	DESCRIPTION	PART	MATERIAL	HEIGHT	WIDTH
43	1/4" DIAMETER TAPCON	–	STEEL	–	–
42	SCREW, #10-24 UNC X .500 PH FL SS, SND	3622198	STEEL	–	–
	SCREW, #10-24 UNC X .500 PH FL, SS, TT	3622197	STEEL	–	–
	SCREW, #10-24 UNC X .500 PH FL, SS, WHT	3622196	STEEL	–	–
41	SCREW, #10 X 5.000"	3629002	STAINLESS STEEL	–	–
40	RECEIVER, HOOKBOLT	57144	STAINLESS STEEL	–	–
39	RECEIVER, BLOCKER LATCH BOLT	57148	STAINLESS STEEL	–	–
38	RECEIVER BASKET, SILL PA/HEAD AP	57142	STEEL	0.998	8.794
37	RECEIVER BASKET, SILL AP/HEAD PA	57143	STEEL	0.998	8.794
36	ASTRAGAL, ACTIVE	57004	FIBERGLASS FRP	1.736	2.322
35	ASTRAGAL, PASSIVE	57157	FIBERGLASS FRP	3.621	3.269
34	DOWEL, FLUTED 5.000"	52190	BIRCH	5.000	0.438
33	DOWEL, FLUTED 6.500"	52190	BIRCH	6.500	0.438
32	LOCK MECHANISUM, (PASSIVE)	57141	STEEL	–	–
31	LOCK MECHANISUM, (5-POINT)	57140	STEEL	–	–
29	STOP, GLAZING STILE	51081	PONDEROSA PINE	0.870	0.875
28	STOP, GLAZING RAIL	51080	PONDEROSA PINE	0.870	0.875
27	SCREW, #10 X 3.000"	PKD0170	STEEL	3.000	0.148
26	SPACER, 1.000" GLASS	20065	VINYL	0.375	0.188
25	PANEL, STOP HEAD PA	57025	PONDEROSA PINE	0.679	1.500
24	PANEL, STOP SIDE	57041	PONDEROSA PINE	0.679	1.500
23	SEALANT	MDS0012/42	SILICONE	–	–
22	WATERBAR, TOP RAIL	57046	POLYPROPYLENE	0.480	0.450
21	STAPLE, 1.500" X 1/4"	4220500	STEEL GALV.	1.500	.049
19	FILLER, RAIL TOP	57012	FIBERGLASS	1.644	1.572
18	FILLER, RAIL BOTTOM	57011	FIBERGLASS	1.644	1.952
17	FILLER, LOCK STILE	57010	FIBERGLASS	1.118	0.688
16	FILLER, HINGE STILE	57009	FIBERGLASS	1.118	1.609
15	W/S, GASKET	52172	SANTOPRENE	0.385	0.893
14	RAIL, TOP	52171	PONDEROSA PINE	4.438	1.719
13	RAIL, BOTTOM	52173	PONDEROSA PINE	8.594	1.719
12	STILE, HINGE	57022	PONDEROSA PINE	4.113	1.719
11	STILE, LOCK	57023	PONDEROSA PINE	4.113	1.719
10	GLASS, LAMINATED	04170	–	–	–
9	FLANGE, HEAD	16073	VINYL	2.166	0.394
8	FLANGE, SIDE	16073	VINYL	2.166	0.394
7	SEALANT	MDS0034/35/36/44	SILICONE	–	–
6	HINGE ASSEMBLY	57049/50	ZINC STEEL	–	–
5	SILL ASSEMBLY	57027	VINYL/ALU	1.147	5.265
4	JAMB, SIDE	57019	PONDEROSA PINE	1.234	4.202
3	COVER, JAMB SIDE	57031	FIBERGLASS	1.210	2.911
2	JAMB, HEAD	57018	PONDEROSA PINE	1.234	4.202
1	COVER, JAMB HEAD	57030	FIBERGLASS	1.210	2.911

DRAWING REFERANCE LIST

ALL PARTS MANUFACTURED TO ANDERSEN SPECIFICATION
AS NOTED BY ABOVE PART NUMBERS

QTY.	DESCRIPTION	LOCATION
BEAD	SILICONE	ATTACHMENT OF SILL TO ROUGH OPENING
BEAD	SILICONE	ATTACHMENT OF HEAD TO SIDE JAMBS
BEAD	SILICONE	ATTACHMENT OF SILL TO SIDE JAMBS
4	SCREWS, #8 X 1/2"	ATTACHMENT OF SILL LOCK TO SILL & SIDE JAMBS
4	SCREWS, #6 X 5/8"	ATTACHMENT OF CORNER LOCKS TO HEAD & SIDE JAMBS
12-16	SCREWS, #8 X 5/8"	ATTACHMENT OF HINGE SUPPORT PLATE TO FRAME
12-16	SCREWS, #10 X 1/2"	ATTACHMENT OF HINGES TO FRAME
2	SCREWS, #10 X 1"	ATTACHMENT OF LATCH RECEIVER TO FRAME (HEAD)
8	SCREWS #10 X 2-1/2"	ATTACHMENT OF HEAD JAMB TO SIDE JAMB
8	SCREWS #10 X 2-1/2"	ATTACHMENT OF SILL TO SIDE JAMB

FRAME FASTENERS LIST

QTY.	DESCRIPTION	LOCATION
BEAD	SILICONE	ATTACHMENT OF FILLER TO STILE
20	STAPLE, 3/4 STAINLESS STEEL	ATTACHMENT OF FILLER TO STILE
3	SCREW, 6-20 X 1" (PN FL SS)	ATTACHMENT OF TOP RAIL FILLER
3	SCREW, 6-20 X 1" (PN FL SS)	ATTACHMENT OF BOTTOM RAIL FILLER
BEAD	ADHESIVE	ATTACHMENT OF TOP RAIL TO STILES
BEAD	ADHESIVE	ATTACHMENT OF BOTTOM RAIL TO STILES
8-10	NAIL, 1-1/2"	ATTACHMENT OF INSDIE GLASS STOPS TO PANEL
4	NAIL, 1-1/2"	ATTACHMENT OF INSIDE HEAD & SILL GLASS STOPS TO PANEL
13-14	SCREWS, #8 X 2"	ATTACHMENT OF LOCK MECHANISM TO PANEL
6-8	SCREWS #10 X 1-1/2"	ATTACHMENT OF HINGES TO PANEL
2	SCREWS #10 X 5"	ATTACHMENT OF RAILS TO STILES
2	DOWEL, FLUTED 6.500"	ATTACHMENT OF BOTTOM RAIL TO STILES
2	DOWEL, FLUTED 5.000"	ATTACHMENT OF TOP RAIL TO STILES

PANEL FASTENERS LIST – ACTIVE PANEL

QTY.	DESCRIPTION	LOCATION
8	SCREW, #10 X 5.000" (SS)	PANEL STILE TO PANEL RAIL
12	SCREW, #8 X 1-1/2" STEEL	ATTACHMENT OF BARREL BOLTS TO PANEL
2	SCREW, 7-13 X 7/8"	ATTACHMENT OF BRACKET TO STILE
2	SCREW, 10-12 X 2-1/2"	ATTACHMENT OF PASSIVE ASTRAGAL TO STILE
6	SCREW, 10-12 X 3-1/2"	ATTACHMENT OF PASSIVE ASTRAGAL TO STILE
BEAD	SILICONE	ATTACHMENT OF PASSIVE ASTRAGAL TO STILE
BEAD	SILICONE	ATTACHMENT OF FILLER TO STILE
20	STAPLE, 3/4 STAINLESS STEEL	ATTACHMENT OF FILLER TO STILE
3	SCREW, 6-20 X 1" (PN FL SS)	ATTACHMENT OF TOP RAIL FILLER
3	SCREW, 6-20 X 1" (PN FL SS)	ATTACHMENT OF BOTTOM RAIL FILLER
BEAD	ADHESIVE	ATTACHMENT OF TOP RAIL TO STILES
BEAD	ADHESIVE	ATTACHMENT OF BOTTOM RAIL TO STILES
8-10	NAIL, 1-1/2"	ATTACHMENT OF INSDIE GLASS STOPS TO PANEL
4	NAIL, 1-1/2	ATTACHMENT OF INSIDE HEAD & SILL GLASS STOPS TO PANEL
13-14	SCREWS, #8 X 2"	ATTACHMENT OF LOCK MECHANISM TO PANEL
6-8	SCREWS #10 X 1-1/2"	ATTACHMENT OF HINGES TO PANEL
2	SCREWS #10 X 5"	ATTACHMENT OF RAILS TO STILES
2	DOWEL, FLUTED 6.500"	ATTACHMENT OF BOTTOM RAIL TO STILES
2	DOWEL, FLUTED 5.000"	ATTACHMENT OF TOP RAIL TO STILES

PANEL FASTENERS LIST – PASSIVE PANEL

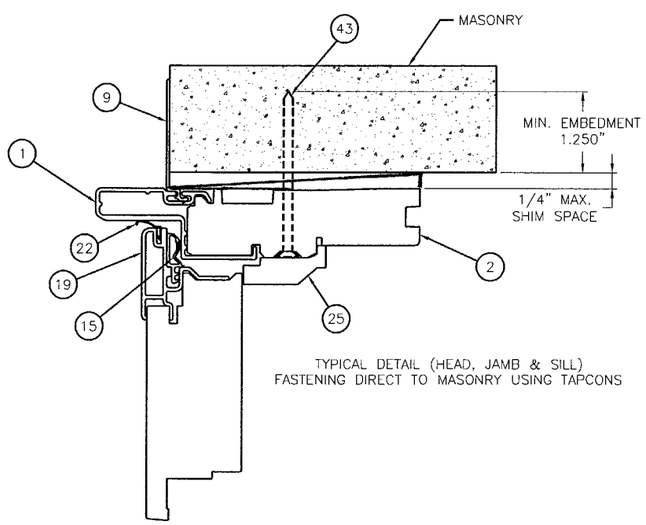

TYPICAL DETAIL (HEAD, JAMB & SILL)
FASTENING DIRECT TO MASONRY USING TAPCONS

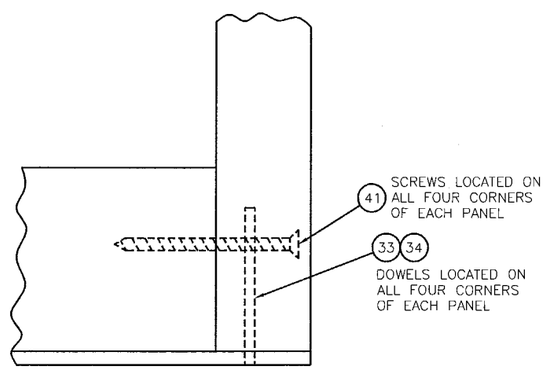

DETAIL -A-

SCALE: NONE

UNIT DES.	# OF SCREWS THROUGH HEAD JAMB	# OF SCREWS THROUGH RIGHT JAMB	# OF SCREWS THROUGH LEFT JAMB
FWO-6080	7	7	7
FWO-5480	7	7	7
FWO-5080	7	7	7
FWO-4180	7	7	7
FWO-60611	7	5	5
FWO-54611	7	5	5
FWO-50611	7	5	5
FWO-41611	7	5	5
FWO-6068	7	5	5
FWO-5468	7	5	5
FWO-5068	7	5	5
FWO-4168	7	5	5

REVISION	
E	8/18/03
D	7/29/03
C	4/14/03
B	1/17/01
A	5/5/00

PRODUCT REVISED
as complying with the Florida
Buiding Code
Acceptance No 03-0625.02
Expiration Date OCT. 5, 2008
By Manuel Perez
Miami-Dade Product Control
Division

TITLE
FRENCHWOOD OUTSWING (FWO)
PATIO DOOR UNIT-IMPACT
AP 2-PANEL

Andersen Corporation
Bayport, Minnesota 55003

THESE DRAWINGS ARE PROVIDED AS A SERVICE BY ANDERSEN CORPORATION FOR THE BENEFIT OF ITS CUSTOMERS. FINAL RESPONSIBILITY FOR ACCURACY OF DESIGN, FINAL SPECIFICATIONS, DRAWINGS AND FOR THE ACTUAL INSTALLATION SUGGESTED BY THESE DRAWINGS LIES WITH THE ARCHITECT, ENGINEER AND/OR CONTRACTOR.

COPYRIGHT ANDERSEN CORPORATION 1998. ALL RIGHTS RESERVED.

APPROVE/DATE
8/18/03

DRAWING NUMBER
DADE-FWO-AP-IMPACT

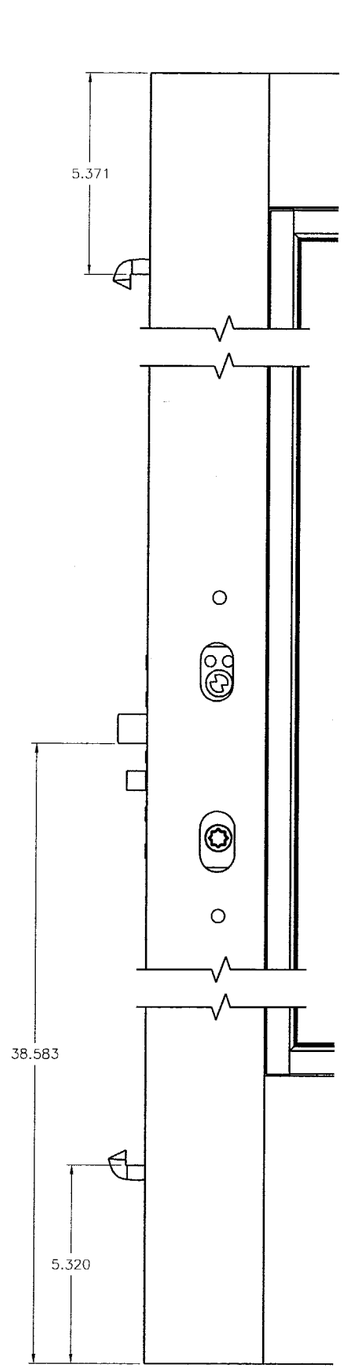

3-POINT
LOCK LOCATIONS

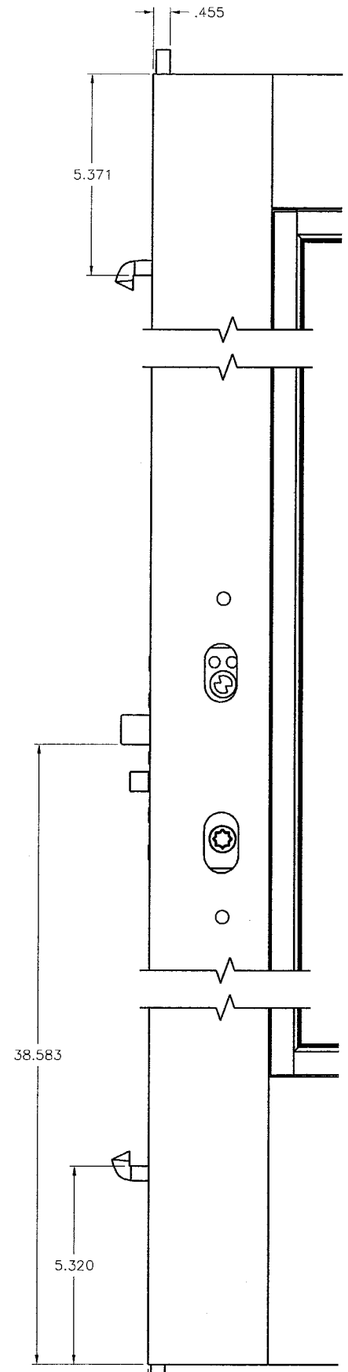

5-POINT
LOCK LOCATIONS

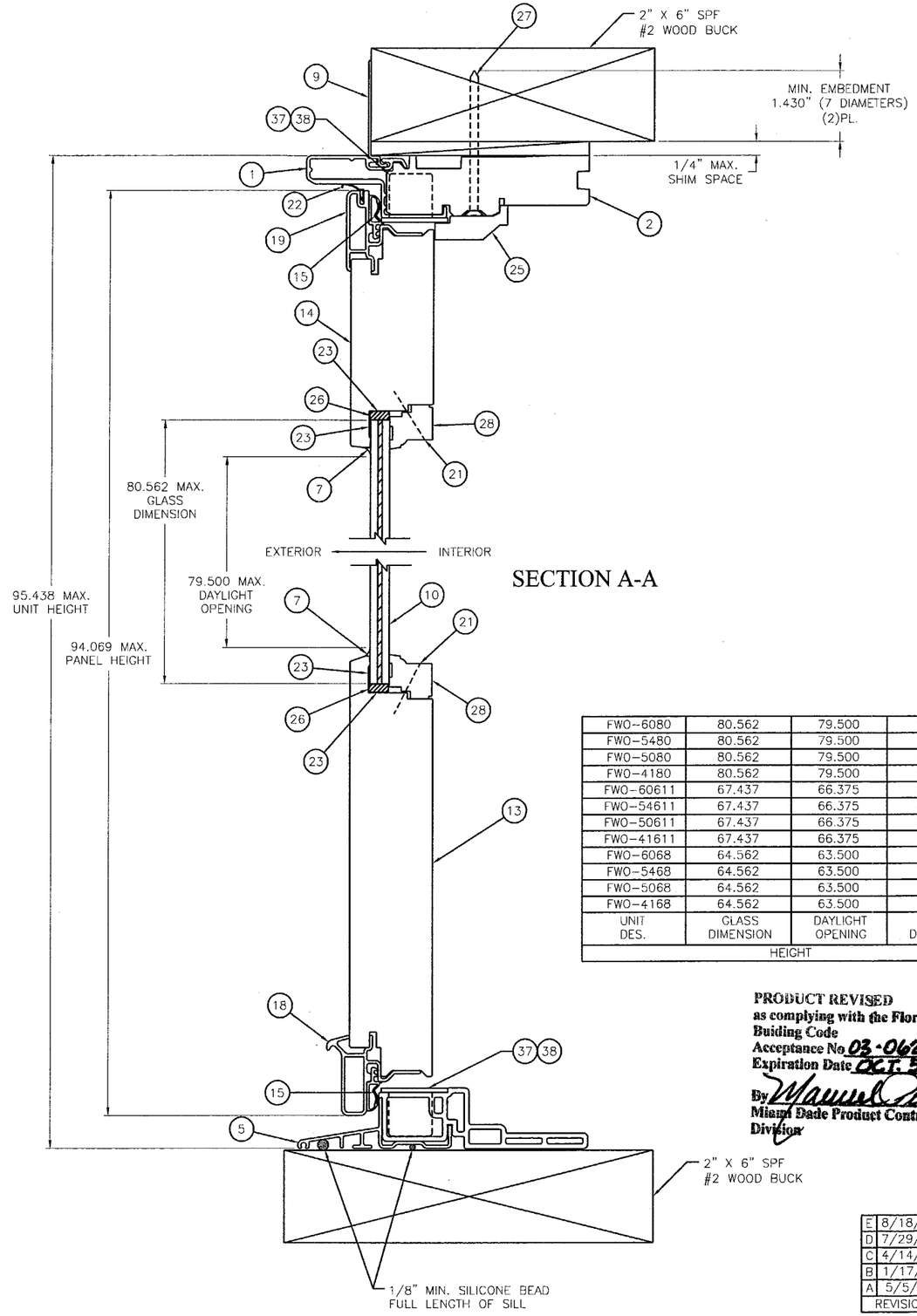

SECTION A-A

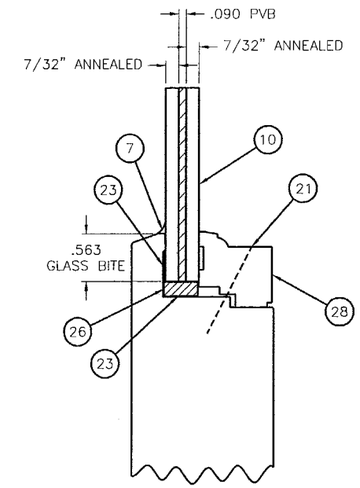

17/32" ANNEALED LAMINATED
GLASS CONSTRUCTION

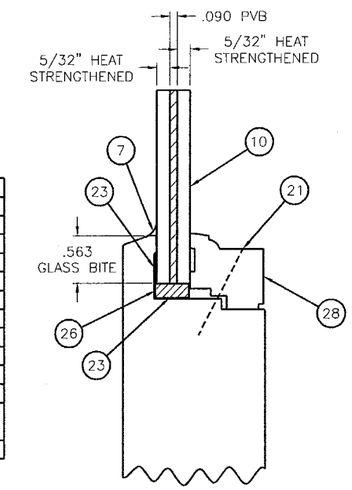

3/8" HEAT STRENGTHENED LAMINATED
GLASS CONSTRUCTION

UNIT DES.	GLASS DIMENSION	DAYLIGHT OPENING	UNIT DIMENSION
	HEIGHT		
FWO-6080	80.562	79.500	95.438
FWO-5480	80.562	79.500	95.438
FWO-5080	80.562	79.500	95.438
FWO-4180	80.562	79.500	95.438
FWO-60611	67.437	66.375	82.313
FWO-54611	67.437	66.375	82.313
FWO-50611	67.437	66.375	82.313
FWO-41611	67.437	66.375	82.313
FWO-6068	64.562	63.500	79.438
FWO-5468	64.562	63.500	79.438
FWO-5068	64.562	63.500	79.438
FWO-4168	64.562	63.500	79.438

PRODUCT REVISED
as complying with the Florida Buiding Code
Acceptance No. 03-0625.02
Expiration Date OCT. 5, 2008
By Manuel Perez
Miami Dade Product Control Division

REVISION	
E	8/18/03
D	7/29/03
C	4/14/03
B	1/17/01
A	5/5/00

TITLE
FRENCHWOOD OUTSWING (FWO)
PATIO DOOR UNIT-IMPACT
AP 2-PANEL

Andersen Corporation
Bayport, Minnesota 55003

THESE DRAWINGS ARE PROVIDED AS A SERVICE BY ANDERSEN CORPORATION FOR THE BENEFIT OF ITS CUSTOMERS. FINAL RESPONSIBILITY FOR ACCURACY OF DESIGN, FINAL SPECIFICATIONS, DRAWINGS AND FOR THE ACTUAL INSTALLATION SUGGESTED BY THESE DRAWINGS LIES WITH THE ARCHITECT, ENGINEER AND/OR CONTRACTOR.

COPYRIGHT ANDERSEN CORPORATION 1998. ALL RIGHTS RESERVED.

APPROVE/DATE 8/18/03

DRAWING NUMBER DADE-FWO-AP-IMPACT

SHT. 3 OF 4

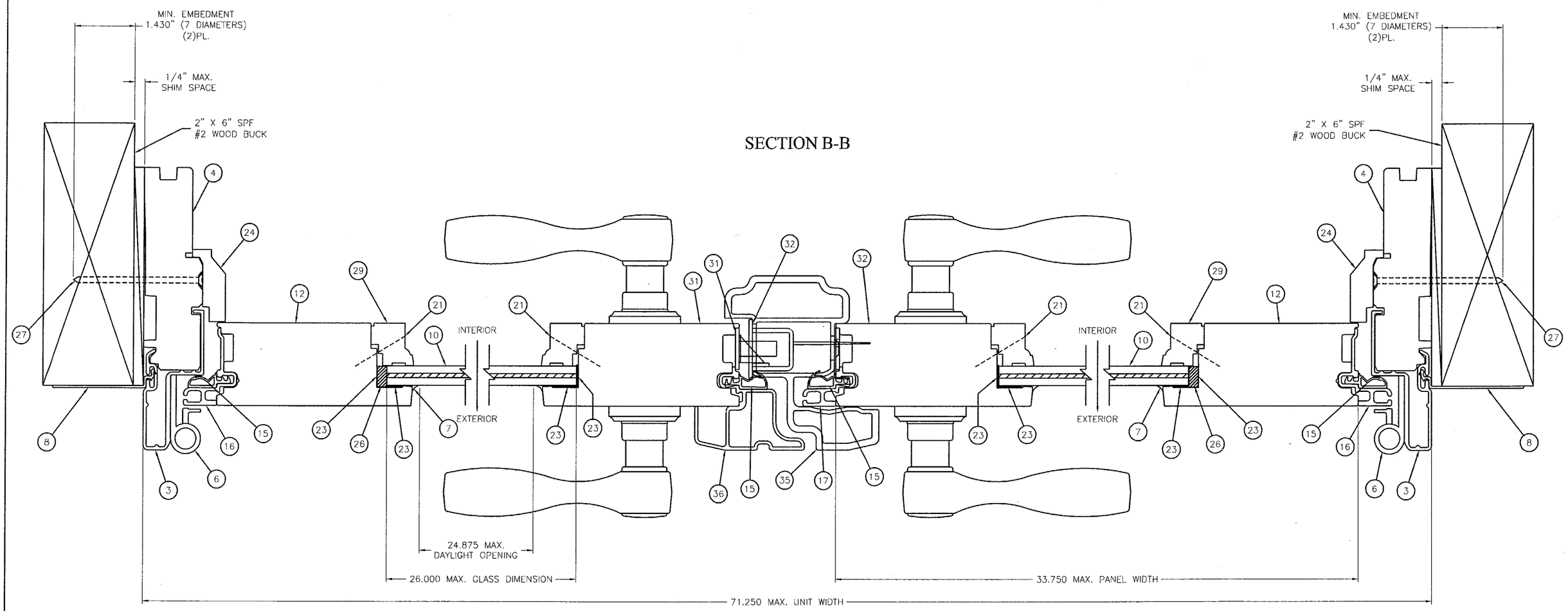

FWO-6080	26.000	24.875	71.250
FWO-5480	22.000	20.875	63.250
FWO-5080	20.000	18.875	59.250
FWO-4180	14.375	13.250	48.000
FWO-60611	26.000	24.875	71.250
FWO-54611	22.000	20.875	63.250
FWO-50611	20.000	18.875	59.250
FWO-41611	14.375	13.250	48.000
FWO-6068	26.000	24.875	71.250
FWO-5468	22.000	20.875	63.250
FWO-5068	20.000	18.875	59.250
FWO-4168	14.375	13.250	48.000
UNIT DES.	GLASS DIMENSION	DAYLIGHT OPENING	UNIT DIMENSION
WIDTH			

PRODUCT REVISED
as complying with the Florida Building Code
Acceptance No. 03-0625.02
Expiration Date Oct. 5, 2008
By Manuel Perez
Miami-Dade Product Control Division

E	8/18/03
D	7/29/03
C	4/14/03
B	1/17/01
A	5/5/00
REVISION	

TITLE
FRENCHWOOD OUTSWING (FWO)
PATIO DOOR UNIT-IMPACT
AP 2-PANEL

Andersen Corporation
Bayport, Minnesota 55003

THESE DRAWINGS ARE PROVIDED AS A SERVICE BY ANDERSEN CORPORATION FOR THE BENEFIT OF ITS CUSTOMERS. FINAL RESPONSIBILITY FOR ACCURACY OF DESIGN, FINAL SPECIFICATIONS, DRAWINGS AND FOR THE ACTUAL INSTALLATION SUGGESTED BY THESE DRAWINGS LIES WITH THE ARCHITECT, ENGINEER AND/OR CONTRACTOR.

COPYRIGHT ANDERSEN CORPORATION 1998. ALL RIGHTS RESERVED.

APPROVE/DATE
8/18/03

DRAWING NUMBER
DADE-FWO-AP-IMPACT

SHT. 4 OF 4