MIAMI-DADE

BUILDING CODE COMPLIANCE OFFICE (BCCO)
PRODUCT CONTROL DIVISION

MIAMI-DADE COUNTY, FLORIDA
METRO-DADE FLAGLER BUILDING
140 WEST FLAGLER STREET, SUITE 1603
MIAMI, FLORIDA 33130-1563
(305) 375-2901 FAX (305) 375-2908

NOTICE OF ACCEPTANCE (NOA)

KML Windows, Inc.
23 Buchanan Court
London, Ontario, Canada N5Z 4P9

SCOPE:

This NOA is being issued under the applicable rules and regulations governing the use of construction materials. The documentation submitted has been reviewed by Miami-Dade County Product Control Division and accepted by the Board of Rules and Appeals (BORA) to be used in Miami Dade County and other areas where allowed by the Authority Having Jurisdiction (AHJ).

This NOA shall not be valid after the expiration date stated below. The Miami-Dade County Product Control Division (In Miami Dade County) and/or the AHJ (in areas other than Miami Dade County) reserve the right to have this product or material tested for quality assurance purposes. If this product or material fails to perform in the accepted manner, the manufacturer will incur the expense of such testing and the AHJ may immediately revoke, modify, or suspend the use of such product or material within their jurisdiction. BORA reserves the right to revoke this acceptance, if it is determined by Miami-Dade County Product Control Division that this product or material fails to meet the requirements of the applicable building code.

This product is approved as described herein, and has been designed to comply with the High Velocity Hurricane Zone of the Florida Building Code.

DESCRIPTION: Aluminum Clad Wood Operable Casement Window-Impact

APPROVAL DOCUMENT: Drawing No.**1227A**, titled "Aluminum Clad Wood Operable Casement Window Impact Windows", sheets 1 through 9 of 9, prepared by W.W. Schaefer Engineering & Consulting, P.A., dated 5/13/03, signed and sealed by Warren Schaefer, P.E., bearing the Miami-Dade County Product Control Revision stamp with the Notice of Acceptance number and expiration date by the Miami-Dade County Product Control Division.

MISSILE IMPACT RATING: Large and Small Missile Impact

LABELING: Each unit shall bear a permanent label with the manufacturer's name or logo, city, state and following statement: "Miami-Dade County Product Control Approved", unless otherwise noted herein.

RENEWAL of this NOA shall be considered after a renewal application has been filed and there has been no change in the applicable building code negatively affecting the performance of this product.

TERMINATION of this NOA will occur after the expiration date or if there has been a revision or change in the materials, use, and/or manufacture of the product or process. Misuse of this NOA as an endorsement of any product, for sales, advertising or any other purposes shall automatically terminate this NOA. Failure to comply with any section of this NOA shall be cause for termination and removal of NOA.

ADVERTISEMENT: The NOA number preceded by the words Miami-Dade County, Florida, and followed by the expiration date may be displayed in advertising literature. If any portion of the NOA is displayed, then it shall be done in its entirety.

INSPECTION: A copy of this entire NOA shall be provided to the user by the manufacturer or its distributors and shall be available for inspection at the job site at the request of the Building Official.

This NOA **revises NOA # 00-1030.05** and, consists of this page 1 as well as approval document mentioned above. The submitted documentation was reviewed by **Theodore Berman, P.E.**

9/03/2003

PRODUCT CONTROL ACCEPTED

NOA No 03-0625.05
Expiration Date: September 27, 2004
Approval Date: October 16, 2003

KML Windows, Inc.

NOTICE OF ACCEPTANCE: EVIDENCE SUBMITTED

A. DRAWINGS

1. Manufacturer's die drawings and sections.
2. Drawing No.**1227A**, titled "Aluminum Clad Wood Operable Casement Window Impact Windows", sheets 1 through 9 of 9, prepared by W.W. Schaefer Engineering & Consulting, P.A., dated 5/13/03, signed and sealed by Warren Schaefer, P.E.

B. TESTS

1. Test reports on 1) Uniform Static Air Pressure Test, Loading per FBC, TAS 202-94
   2) Large Missile Impact Test per FBC, TAS 201-94
   3) Cyclic Wind Pressure Loading per FBC, TAS 203-94

   along with installation diagram of aluminum clad wood operable casement windows of different shapes, prepared by Architectural Testing, Inc., Test Report No. **ATI 02-35025.01**, dated 2/12/03, signed and sealed by Steven Urich, P.E

Submitted under NOA# 00-1030.05

1. Test reports on 1) Air Infiltration Test, per FBC, TAS 202-94
   2) Uniform Static Air Pressure Test, Loading per FBC, TAS 202-94
   3) Water Resistance Test, per FBC, TAS 202-94
   4) Large Missile Impact Test per FBC, TAS 201-94
   5) Cyclic Wind Pressure Loading per FBC, TAS 203-94
   6) Forced Entry Test, per FBC 2411 3.2.1 and TAS 202-94

   along with installation diagram of aluminum clad wood operable casement windows of different shapes, prepared by Intertek Testing Services NA Inc., Test Report No. **J99022770-231-01**, dated October 9, 2000, signed and sealed by Douglas Keith Tucker, P.E
2. Test reports on 1) Air Infiltration Test, per FBC, TAS 202-94
   2) Uniform Static Air Pressure Test, Loading per FBC, TAS 202-94
   3) Water Resistance Test, per FBC, TAS 202-94

   along with installation diagram of aluminum clad wood operable casement windows of different shapes, prepared by Intertek Testing Services NA Inc., Test Report No. **J99022770-231-02**, dated October 10, 2000, signed and sealed by Douglas Keith Tucker, P.E

C. CALCULATIONS

1. Anchor Calculations and ASTM E-1300-98 and structural analysis, dated 5/22/03, prepared by W.W. Schaefer Engineering & Consulting, P.A., signed and sealed by Warren Schaefer, P.E.

Submitted under NOA# 00-1030.05

2. Anchor Calculations, prepared by W. W. Schaefer Engineering & Consulting, P.A., dated 9/25/00, signed and sealed by Warren W. Schaefer, PE.

Theodore Berman, P.E.
Deputy Director, Product Control Division
NOA No 03-0625.05
Expiration Date: September 27, 2004
Approval Date: October 16, 2003

KML Windows, Inc.

NOTICE OF ACCEPTANCE: EVIDENCE SUBMITTED

D. MATERIAL CERTIFICATIONS

Submitted under NOA# 00-1030.05

1. Notice of Acceptance No. **00-0524.06**issued to Nebula Glass International Inc. for "Glasslam Safety-Plus Laminated Glass" dated 9/21/00, expiring on 9/9/03.
2. Notice of Acceptance No. **02-0828.16** issued to E.I. DuPont DeNemours for "Dupont Butacite ® PVB" dated 11/21/02, expiring on 12/11/05.

D. STATEMENTS

1. Laboratory compliance letter for Test Report no. **ATI 02-35025.01**, issued by Architectural Testing, Inc., dated 2/11/03, signed and sealed by Steven Urich, P.E.

E. QUALITY ASSURANCE

1. Miami Dade County Building Code Compliance Office.

F. OTHER

1. Notice of Acceptance No. **00-1030.05,** issued to KML Window, Inc., Aluminum Clad Wood Operable Casement Window, approved on 9/27/01 and expiring on 9/27/04.

Theodore Berman, P.E.
Deputy Director, Product Control Division
NOA No 03-0625.05
Expiration Date: September 27, 2004
Approval Date: October 16, 2003

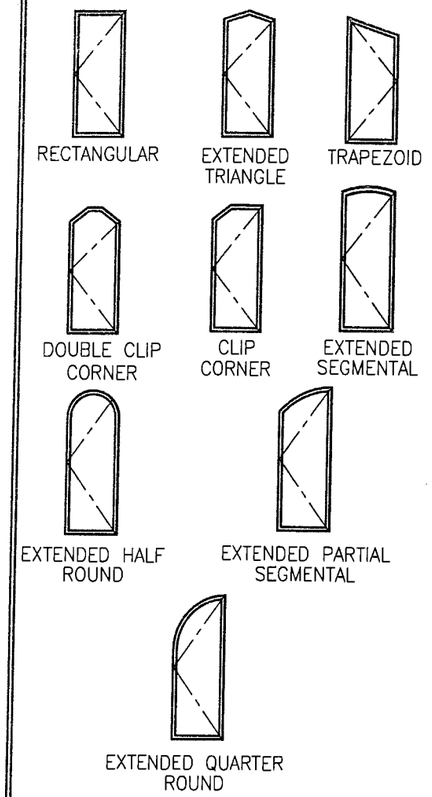

SHAPES CONSIDERED AS PART OF THIS APPROVAL

GENERAL NOTES

1. THESE WINDOW SYSTEMS HAVE BEEN TESTED, ANALYZED AND APPROVED FOR DESIGN PRESSURES NOT TO EXCEED THOSE SHOWN IN THE "ALLOWABLE DESIGN LOADS" TABLES.
2. BUCKING, OPENINGS & BUCKING FASTENERS MUST BE DESIGNED & INSTALLED TO WITHSTAND WIND LOADS AS DETERMINED FOR EA. APPLICATION.
3. ALL HARDWARE & FASTENERS SHALL BE IN ACCORDANCE WITH THESE DRAWINGS & MAY NOT VARY UNLESS SPECIFICALLY MENTIONED ON THE DRAWINGS.
4. THE DETAILS & SPECIFICATIONS SHOWN HEREIN REPRESENT THE PRODUCTS PROPOSED FOR WATER, AIR, IMPACT, CYCLIC & UNIFORM STATIC AIR PRESSURE TESTING IN CONFORMANCE WITH FLORIDA BUILDING CODE PROTOCOLS TAS 201, 202 & 203 FOR IMPACT WINDOWS.
5. ALL JAMB TO BUCKING SHEAR FASTENERS MUST PENETRATE BUCK A MINIMUM OF 1 1/4". IF PENETRATION IS LESS THAN 1 1/4" THEN SCREW LENGTH SHALL INCREASE AS REQUIRED.
6. THESE WINDOW SYSTEMS HAVE BEEN DESIGNED IN ACCORDANCE WITH THE FLORIDA BUILDING CODE (FBC).
7. THIS PRODUCT HAS BEEN TESTED IN ACCORDANCE WITH FLORIDA BUILDING CODE PROTOCOLS TAS-201, 202 & 203 FOR LARGE MISSILE IMPACT, STRUCTURAL & CYCLIC TESTING.

ALLOWABLE DESIGN LOADS

GLASS OPTION	WINDOW SIZE (OSM)		RECTANGULAR		SHAPED	
	MAX. WIDTH (IN.)	MAX. HEIGHT (IN.)	POS (PSF)	NEG (PSF)	POS (PSF)	NEG (PSF)
2 & 4	35"	84"	65	70	65	50
1	25"	84"	65	70	65	50
	30"	48"	65	70	65	50
		54"	62.3	62.3	62.3	50
		60"	58.0	58.0	58.0	50
		72"	51.6	51.6	51.6	50
		84"	47.5	47.5	47.5	47.5
	35"	36"	65	70	65	50
		42"	65	67.2	65	50
		48"	57.2	57.2	57.2	50
		54"	49.5	49.5	49.5	49.5
		60"	44.2	44.2	44.2	44.2
		72"	37.6	37.6	37.6	37.6
		84"	33.8	33.8	33.8	33.8
3	32"	84"	65	70	65	50
	35"	66"	65	70	65	50
		72"	65	69.2	65	50
		78"	65	65.7	65	50
		84"	62.8	62.8	62.8	50

LATCH & HINGE QUANTITY TABLE

WINDOW HEIGHT	NUMBER OF LATCH POINTS REQ'D	NUMBER OF HINGES REQ'D
36"	2	2
42"	3	2
48"	3	2
54"	3	3
60"	4	3
66"	4	3
73"	5	3
78"	5	3
84"	5	3

1. IF THE WINDOW HEIGHT FALLS BETWEEN HEIGHTS IN THIS TABLE, THE TALLER TABLE HEIGHT SHALL BE USED.
2. THE MINIMUM NUMBER OF LATCH POINTS OR HINGES USED MAY NOT BE LESS THAN 2 FOR WINDOWS SHORTER THAN 36".

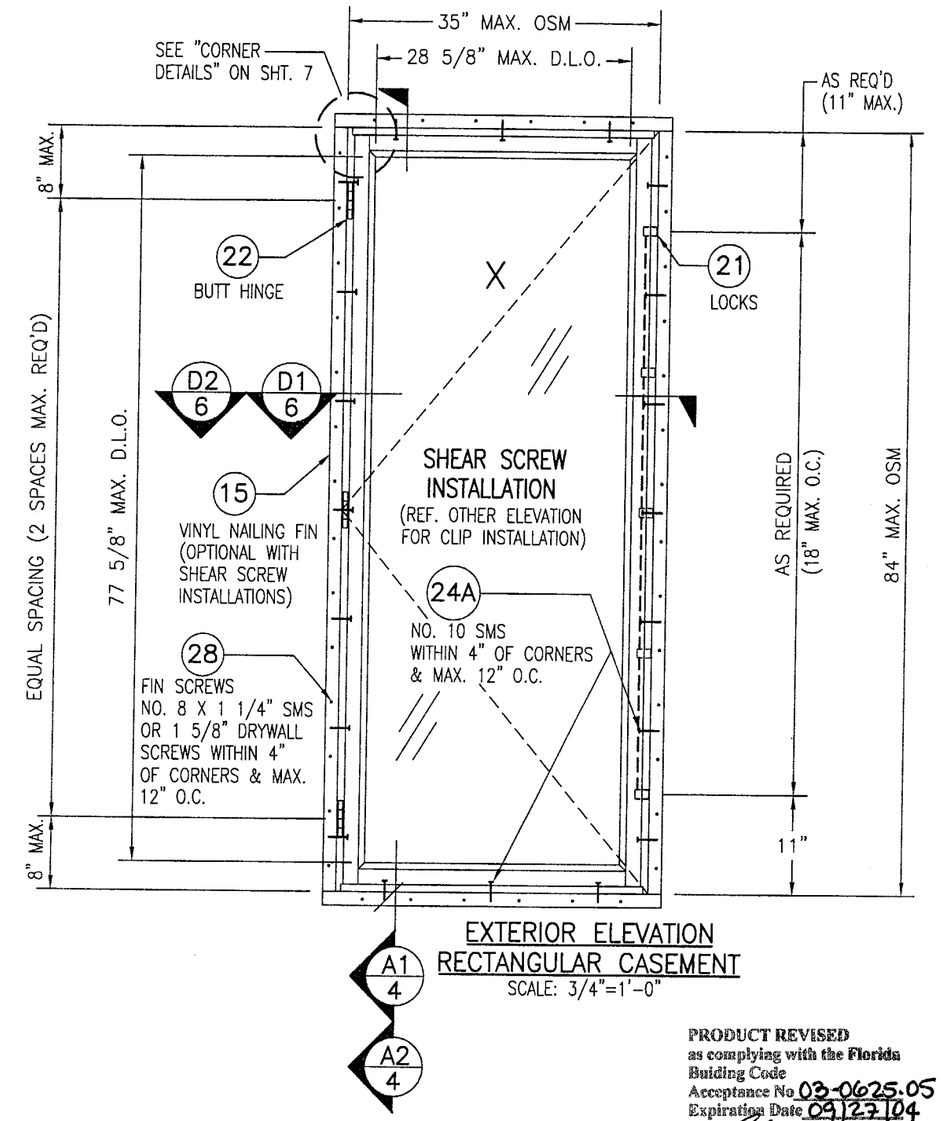

EXTERIOR ELEVATION
RECTANGULAR CASEMENT
SCALE: 3/4"=1'-0"

PRODUCT REVISED
as complying with the Florida Building Code
Acceptance No 03-0625.05
Expiration Date 09/27/04
By Glenda Benn
Miami Dade Product Control Division

NOTE: NUMBER OF LATCH POINTS & BUTT HINGES MAY VARY WITH UNIT HEIGHT PROVIDING END DISTANCES & SPACINGS DO NOT EXCEED THE MAXIMUMS SHOWN IN THESE ELEVATIONS.

NOTE: FOR COMBINATION OF UNITS. SEE SHEET 3 & MULLION DRAWING NO. 1003E UNDER SEPERATE APPROVAL

JAMB FASTENER MIN. EMBEDMENT INTO OPENING OR BUCK

NO. 10 SMS SCREWS INTO BUCK = 1 3/8"
1/4" TAPCON INTO CONCRETE/BLOCK = 1 1/4"

JAMB FASTENER MINIMUM EDGE DISTANCE AT OPENING OR BUCK

WOOD BUCK = 1"
CONCRETE/BLOCK = 2"

DRAWN BY: K.P.S.	CHECKED BY: W.W.S.
PLOT: 1=16	DATE: 05/13/03

NO.	REVISION DESCRIPTION	BY	DATE

DRAWING TITLE
ALUMINUM CLAD WOOD OPERABLE CASEMENT IMPACT WINDOWS

MANUFACTURER
KML WINDOWS, INC.
23 BUCHANAN COURT
LONDON, ONTARIO, CANADA N5Z4P9
(519) 681-7012

CONSULTANTS
W. W. SCHAEFER ENGINEERING & CONSULTING, P.A.
8895 N. MILITARY TRAIL, SUITE C-204
PALM BEACH GARDENS, FL 33410
PHONE: 561-775-4902 FAX: 561-775-4903

CERTIFICATION
JUN 18 2003
WARREN W. SCHAEFER, P.E.
P.E. NO. 44135

DRAWING NO. 1227A
REV.
SHEET NO. 1 OF 9

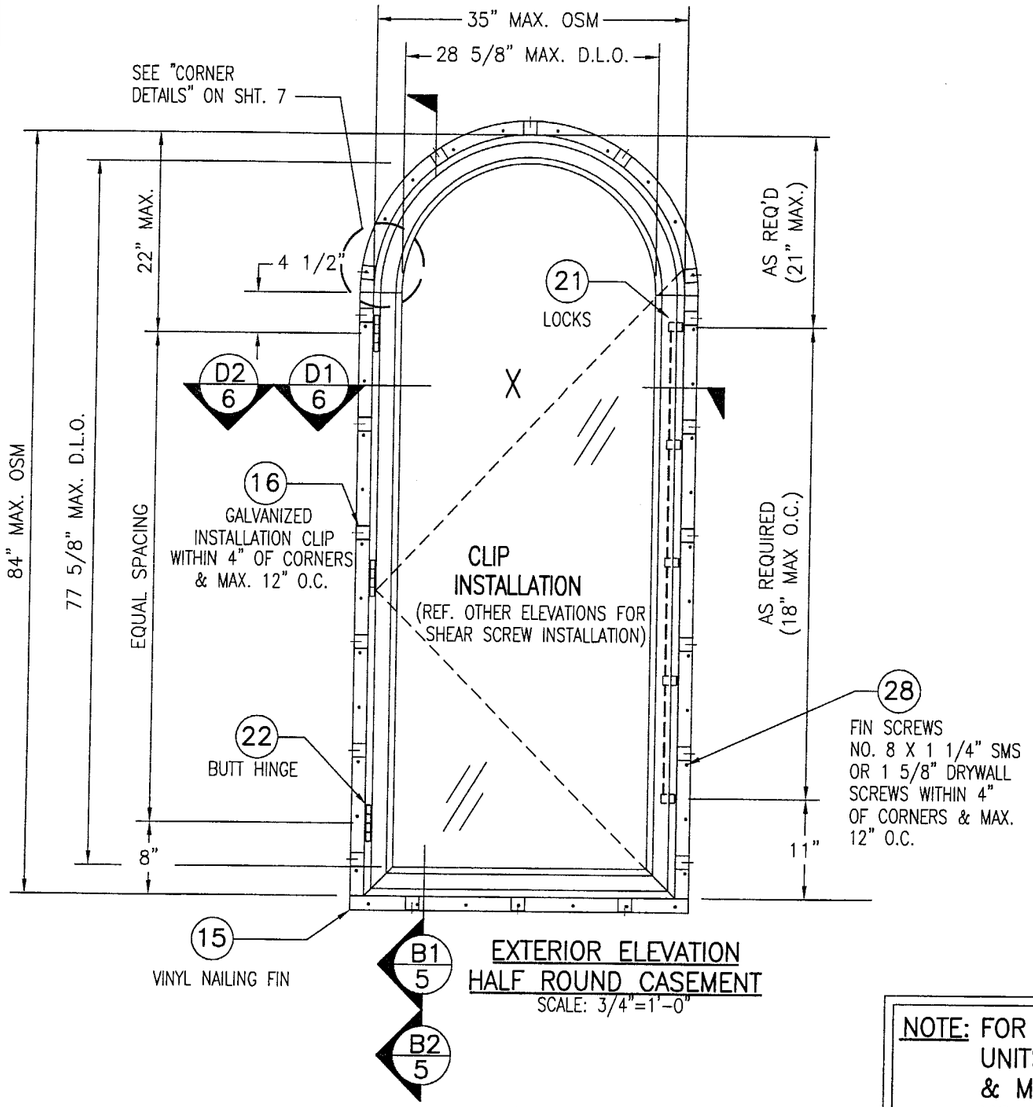

EXTERIOR ELEVATION
HALF ROUND CASEMENT
SCALE: 3/4"=1'-0"

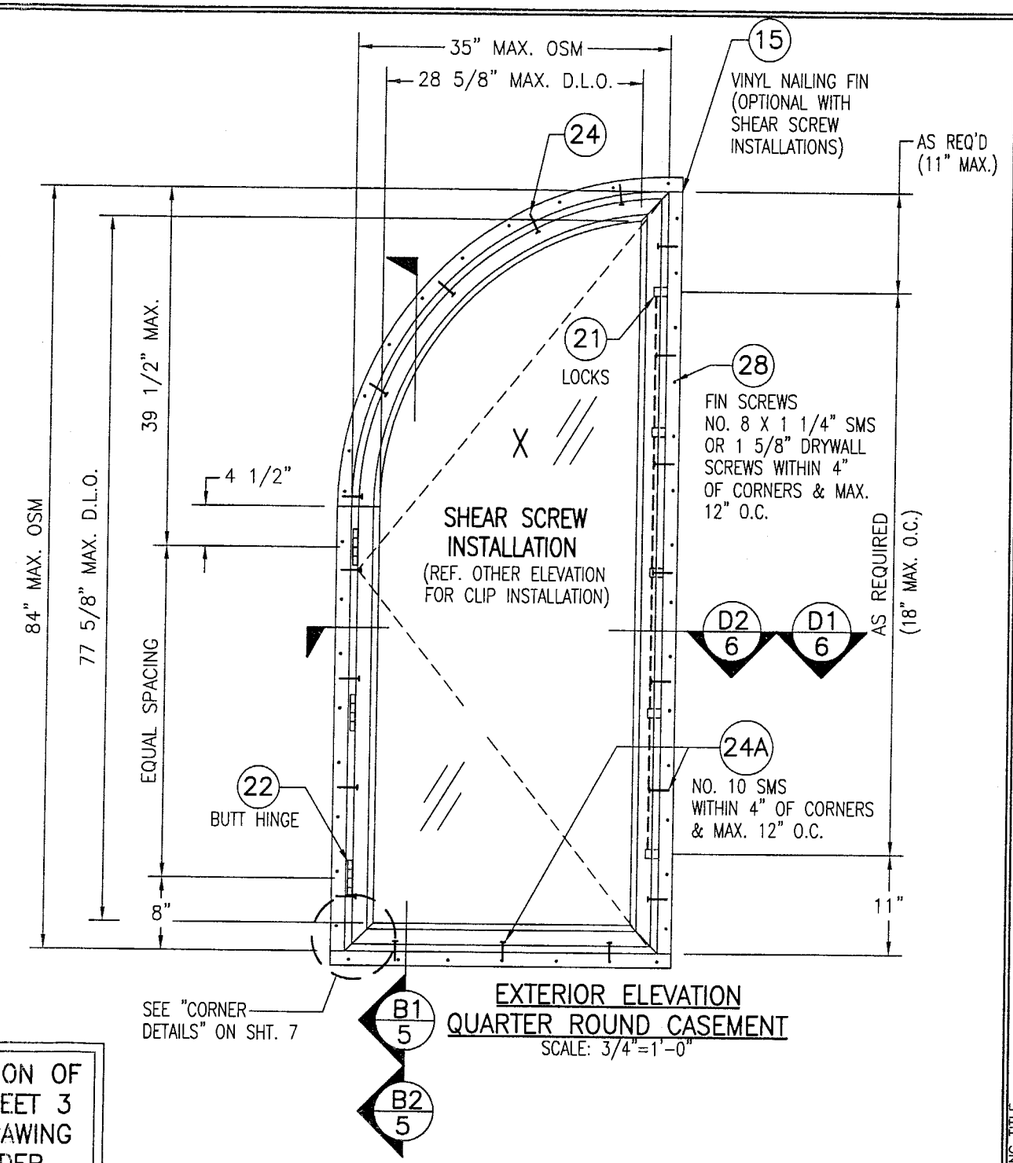

EXTERIOR ELEVATION
QUARTER ROUND CASEMENT
SCALE: 3/4"=1'-0"

NOTE: FOR COMBINATION OF UNITS. SEE SHEET 3 & MULLION DRAWING NO. 1003E UNDER SEPERATE APPROVAL

NOTE: NUMBER OF LATCH POINTS & BUTT HINGES MAY VARY WITH UNIT HEIGHT PROVIDING END DISTANCES & SPACINGS DO NOT EXCEED THE MAXIMUMS SHOWN IN THESE ELEVATIONS.

ALLOWABLE DESIGN LOADS
SEE SHEET 1

FOR JAMB FASTENER EMBED & EDGE DISTANCE REQUIREMENTS, SEE SHEET 1

PRODUCT REVISED
as complying with the Florida Building Code
Acceptance No. 03-0625.06
Expiration Date 09/27/04
By Miami Dade Product Control Division

DRAWN BY: K.P.S.	CHECKED BY: W.W.S.
PLOT: 1=16	DATE: 05/13/03

NO.	REVISION DESCRIPTION	BY	DATE

DRAWING TITLE
ALUMINUM CLAD WOOD OPERABLE CASEMENT IMPACT WINDOWS

MANUFACTURER
KML WINDOWS, INC.
23 BUCHANAN COURT
LONDON, ONTARIO, CANADA N5Z4P9
(519) 681-7012

CONSULTANTS
W. W. SCHAEFER ENGINEERING & CONSULTING, P.A.
8895 N. MILITARY TRAIL; SUITE C-204
PALM BEACH GARDENS, FL 33410
PHONE: 561-775-4902 FAX: 561-775-4903

CERTIFICATION
JUN 18 2003
WARREN W. SCHAEFER, P.E.
P.E. NO. 44135

DRAWING NO. 1227A
REV.
SHEET NO. 2 OF 9

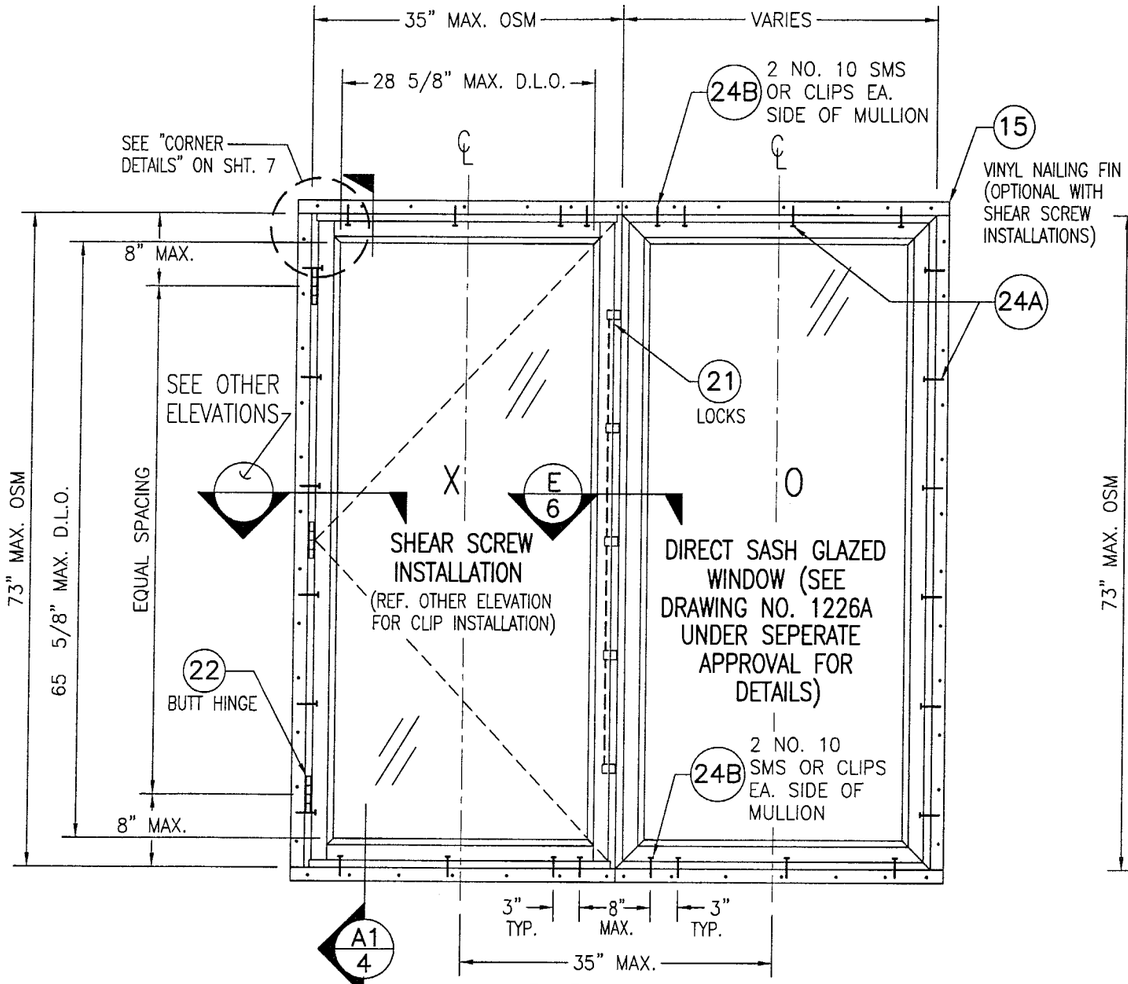

EXTERIOR ELEVATION
MULTIPLE OPERABLE/FIXED CASEMENT
(UP TO 4 WINDOWS MAY BE COMBINED IN ONE OPENING)
SCALE: 3/4"=1'-0"
(FOR WINDOW DETAILS & DIMENSIONS NOT SHOWN, SEE OTHER ELEVATIONS)

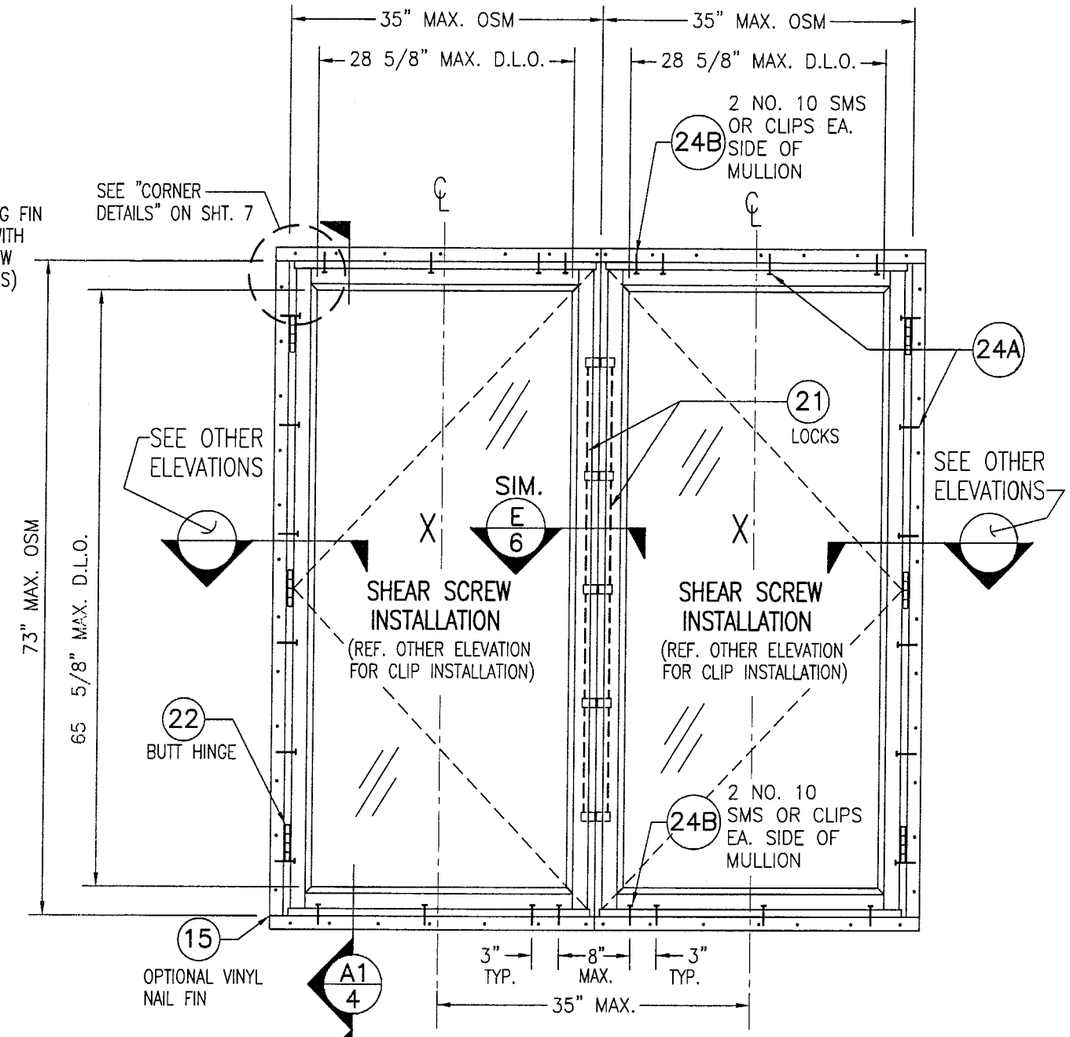

EXTERIOR ELEVATION
MULTIPLE OPERABLE CASEMENT
(UP TO 4 WINDOWS MAY BE COMBINED IN ONE OPENING)
SCALE: 3/4"=1'-0"
(FOR WINDOW DETAILS & DIMENSIONS NOT SHOWN, SEE OTHER ELEVATIONS)

FOR JAMB FASTENER EMBED & EDGE DISTANCE REQUIREMENTS, SEE SHEET 1

ALLOWABLE DESIGN LOADS (MULLED UNITS ONLY)
ALLOWABLE DESIGN LOAD ON MULLED UNITS SHALL BE THE LESSER OF +65/−70 PSF OR AS CONTROLLED BY THE INDIVIDUAL WINDOW (SEE LOAD TABLE ON SHEET 1 FOR ALLOWABLE WINDOW LOADS).

NOTE: NUMBER OF LATCH POINTS & BUTT HINGES MAY VARY WITH UNIT HEIGHT PROVIDING END DISTANCES & SPACINGS DO NOT EXCEED THE MAXIMUMS SHOWN IN THESE ELEVATIONS.

NOTE: FOR COMBINATION OF UNITS. SEE MULLION DRAWING NO. 1003E UNDER SEPERATE APPROVAL

PRODUCT REVISED
as complying with the Florida Buiding Code
Acceptance No. 03-0625.05
Expiration Date 09/27/04
By [signature]
Miami Dade Product Control Division

DRAWN BY: K.P.S.	CHECKED BY: W.W.S.
PLOT: 1=16	DATE: 05/13/03

NO.	REVISION DESCRIPTION	BY	DATE

DRAWING TITLE
ALUMINUM CLAD WOOD OPERABLE CASEMENT IMPACT WINDOWS

MANUFACTURER
KML WINDOWS, INC.
23 BUCHANAN COURT
LONDON, ONTARIO, CANADA N5Z4P9
(519) 681-7012

CONSULTANTS
W. W. SCHAEFER ENGINEERING & CONSULTING, P.A.
8895 N. MILITARY TRAIL; SUITE C-204
PALM BEACH GARDENS, FL 33410
PHONE: 561-775-4902 FAX: 561-775-4903

CERTIFICATION
JUN 18 2003
WARREN W. SCHAEFER, P.E.
P.E. NO. 44135

DRAWING NO. 1227A
REV.
SHEET NO. 3 OF 9

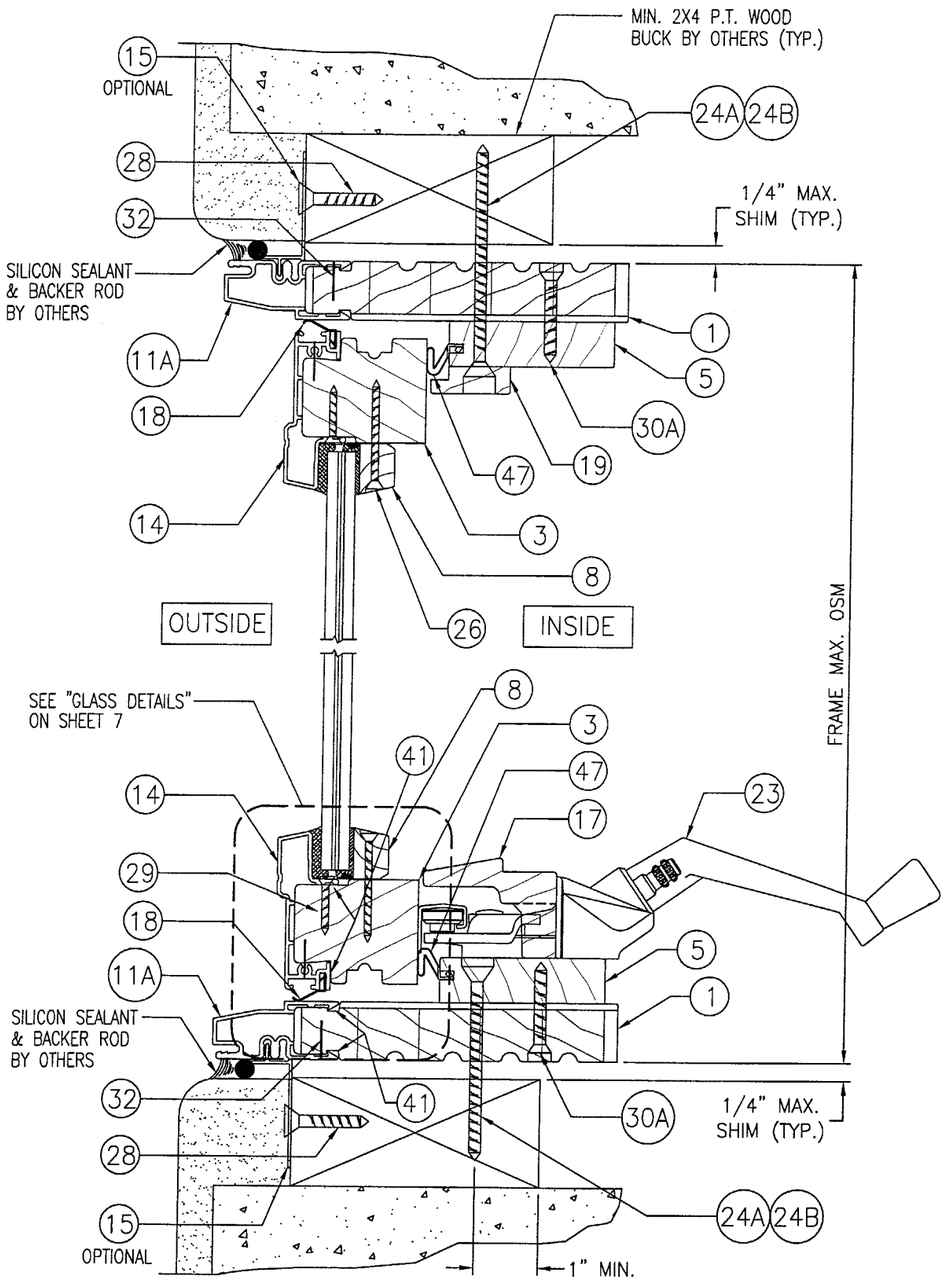

SECTION A1/4

SCALE: HALF FULL SIZE

SEE "OPTIONAL JAMB DETAIL" ON SHEET 7 FOR DIRECT MOUNT TO BLOCK OR CONCRETE.

SHEAR SCREW INSTALLATION

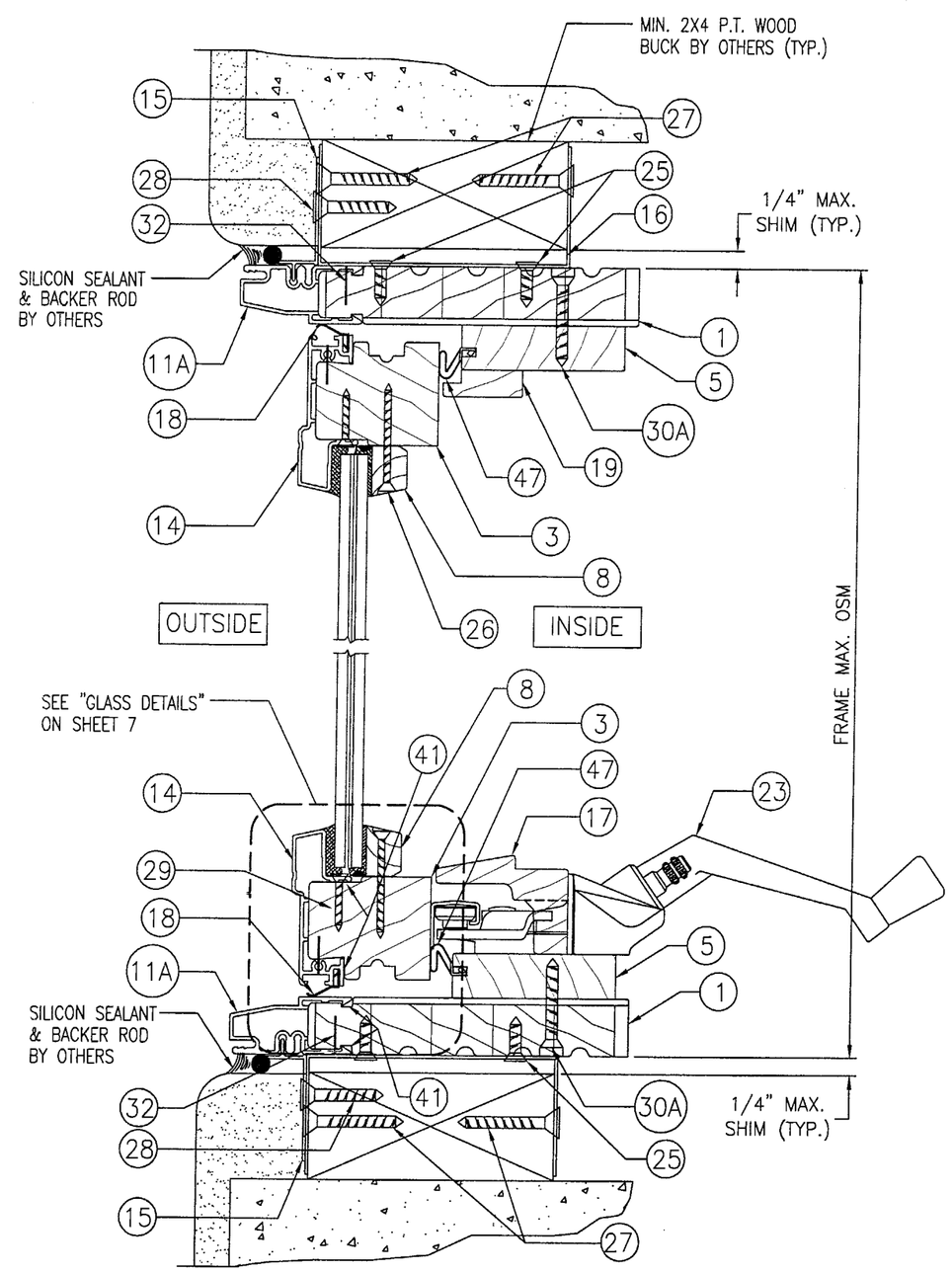

SECTION A2/4

SCALE: HALF FULL SIZE

CLIP INSTALLATION

PRODUCT REVISED
as complying with the Florida Buiding Code
Acceptance No 03-0625.05
Expiration Date 09/27/04
By [signature]
Miami Dade Product Control Division

DRAWN BY: K.P.S.	CHECKED BY: W.W.S.
PLOT: 1=2	DATE: 05/13/03

NO.	REVISION DESCRIPTION	BY	DATE

DRAWING TITLE
ALUMINUM CLAD WOOD OPERABLE CASEMENT IMPACT WINDOWS

MANUFACTURER
KML WINDOWS, INC.
23 BUCHANAN COURT
LONDON, ONTARIO, CANADA N5Z4P9
(519) 681-7012

CONSULTANTS
W. W. SCHAEFER ENGINEERING & CONSULTING, P.A.
8895 N. MILITARY TRAIL; SUITE C-204
PALM BEACH GARDENS, FL 33410
PHONE: 561-775-4902 FAX: 561-775-4903

CERTIFICATION
JUN 18 2003
WARREN W. SCHAEFER, P.E.
P.E. NO. 44135

DRAWING NO. 1227A
REV.
SHEET NO. 4 OF 9

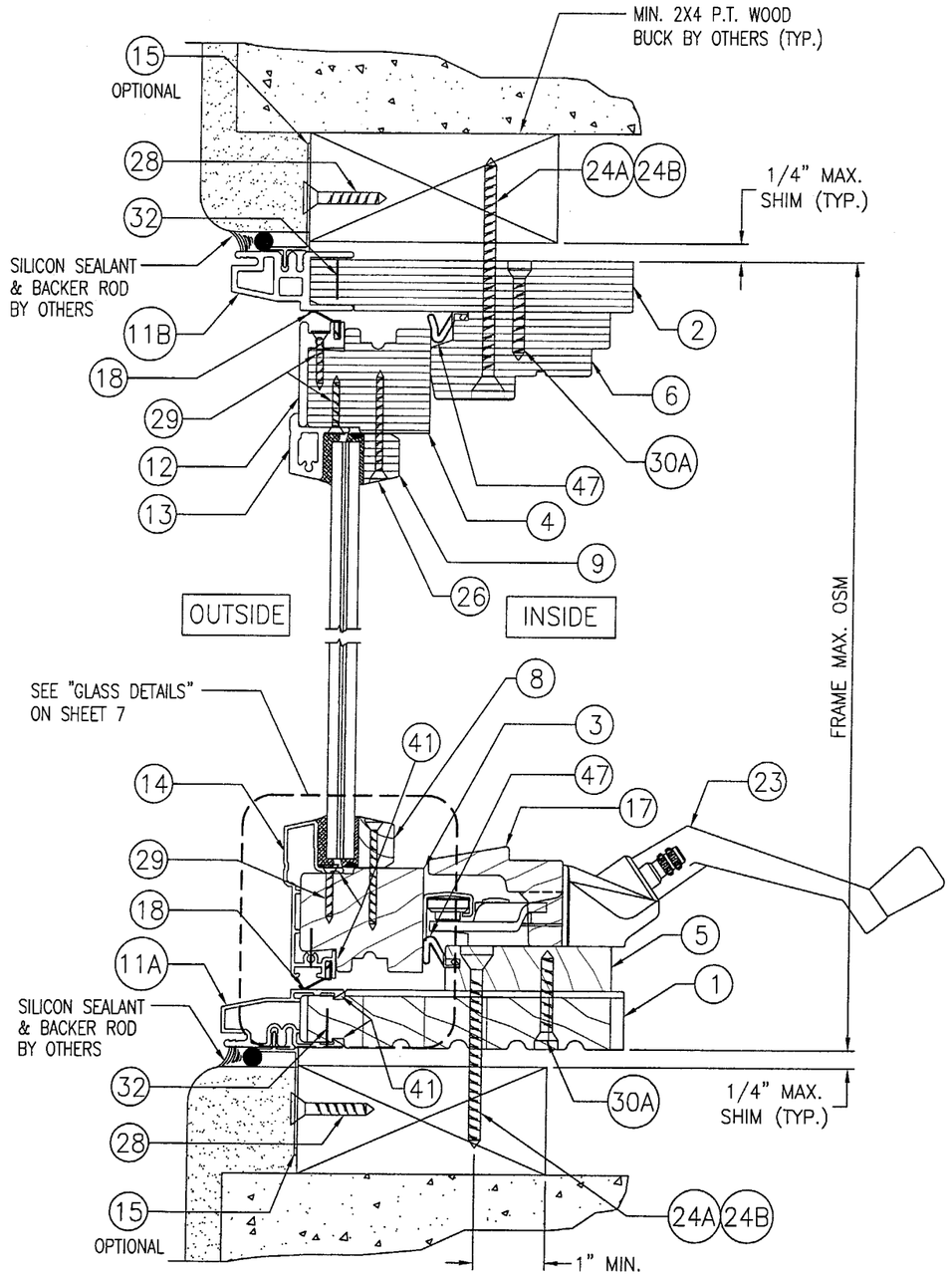

SECTION B1/5

SCALE: HALF FULL SIZE

SEE "OPTIONAL JAMB DETAIL" ON SHEET 7 FOR DIRECT MOUNT TO BLOCK OR CONCRETE.

SHEAR SCREW INSTALLATION

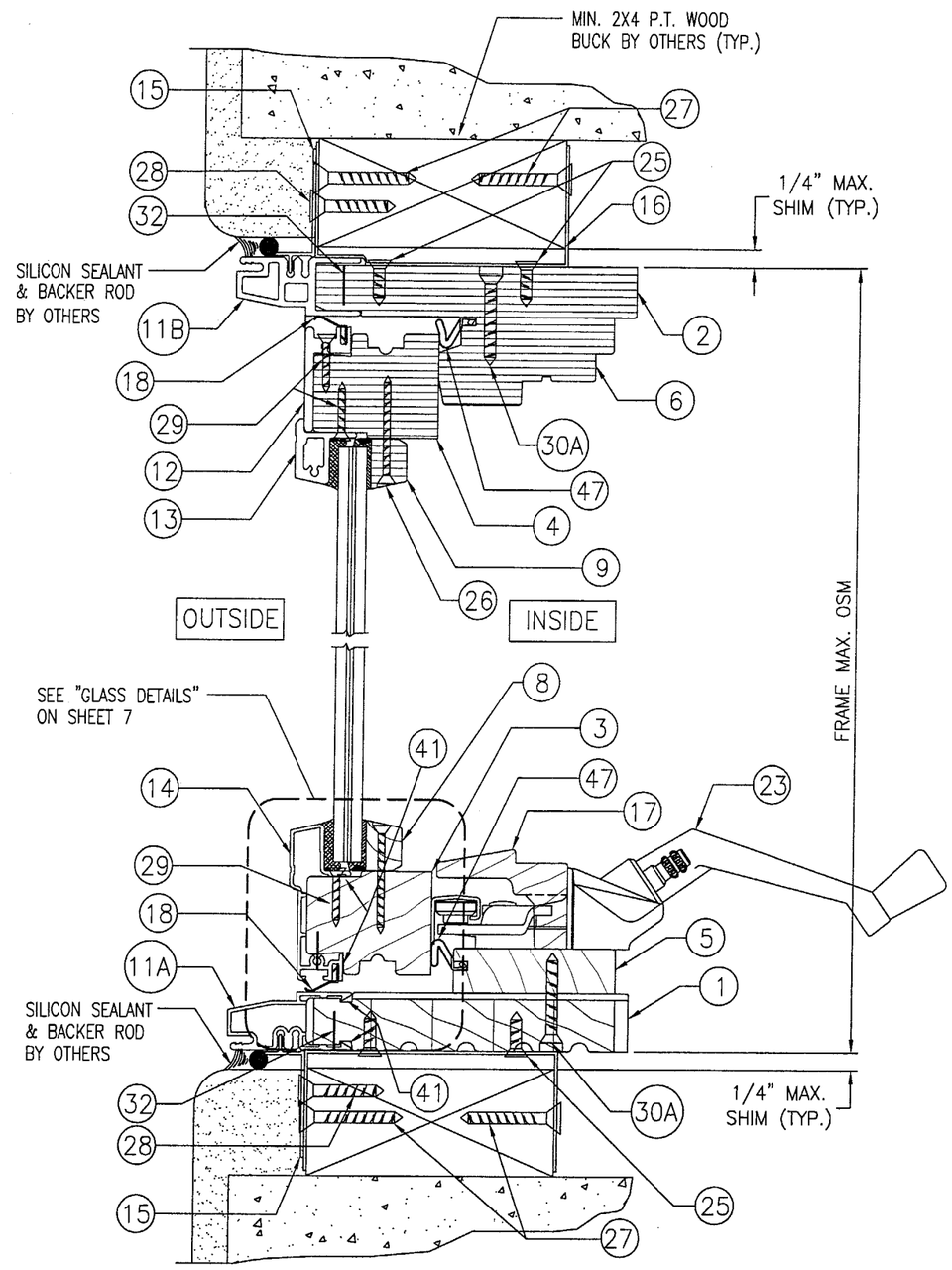

SECTION B2/5

SCALE: HALF FULL SIZE

CLIP INSTALLATION

PRODUCT REVISED
as complying with the Florida Buiding Code
Acceptance No 03-0625.05
Expiration Date 09/27/04
By [signature]
Miami Dade Product Control Division

DRAWN BY: K.P.S.	CHECKED BY: W.W.S.
PLOT: 1=2	DATE: 05/13/03

NO.	REVISION DESCRIPTION	BY	DATE

DRAWING TITLE
ALUMINUM CLAD WOOD OPERABLE CASEMENT IMPACT WINDOWS

MANUFACTURER
KML WINDOWS, INC.
23 BUCHANAN COURT
LONDON, ONTARIO, CANADA N5Z4P9
(519) 681-7012

CONSULTANTS
W. W. SCHAEFER ENGINEERING & CONSULTING, P.A.
8895 N. MILITARY TRAIL; SUITE C-204
PALM BEACH GARDENS, FL 33410
PHONE: 561-775-4902 FAX: 561-775-4903

CERTIFICATION
JUN 18 2003
WARREN W. SCHAEFER, P.E.
P.E. NO. 44135

DRAWING NO. 1227A
REV.

SHEET NO. 5 OF 9

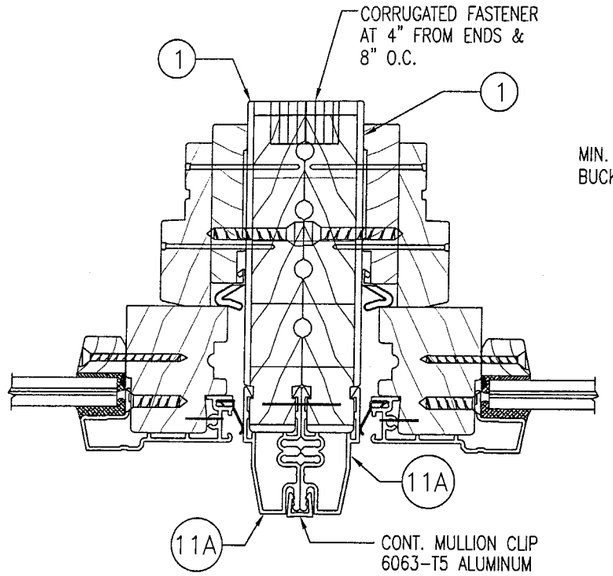

SECTION E/6

SCALE: HALF FULL SIZE

(FOR DETAIL & INFORMATION NOT SHOWN REFERENCE OTHER SECTIONS)

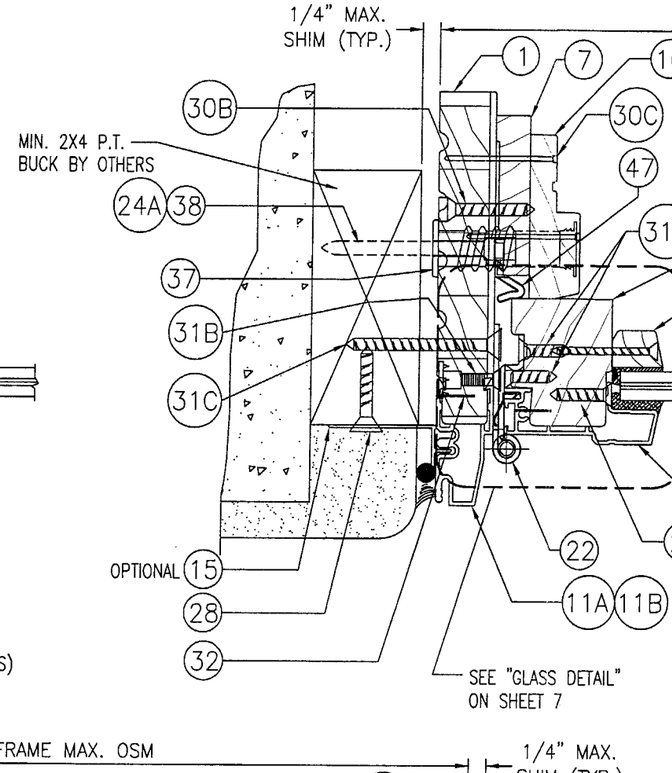

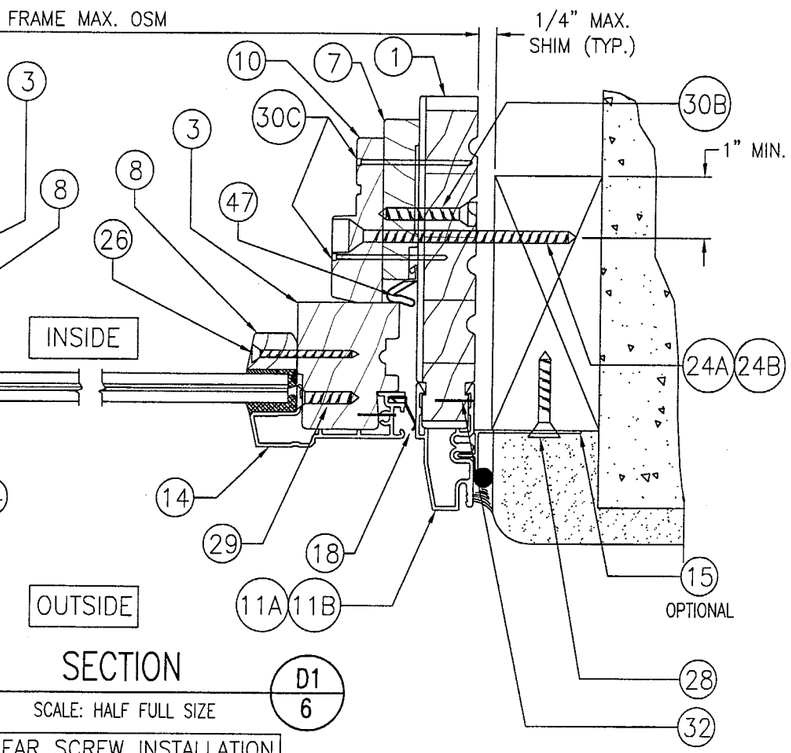

SECTION D1/6

SCALE: HALF FULL SIZE

SHEAR SCREW INSTALLATION

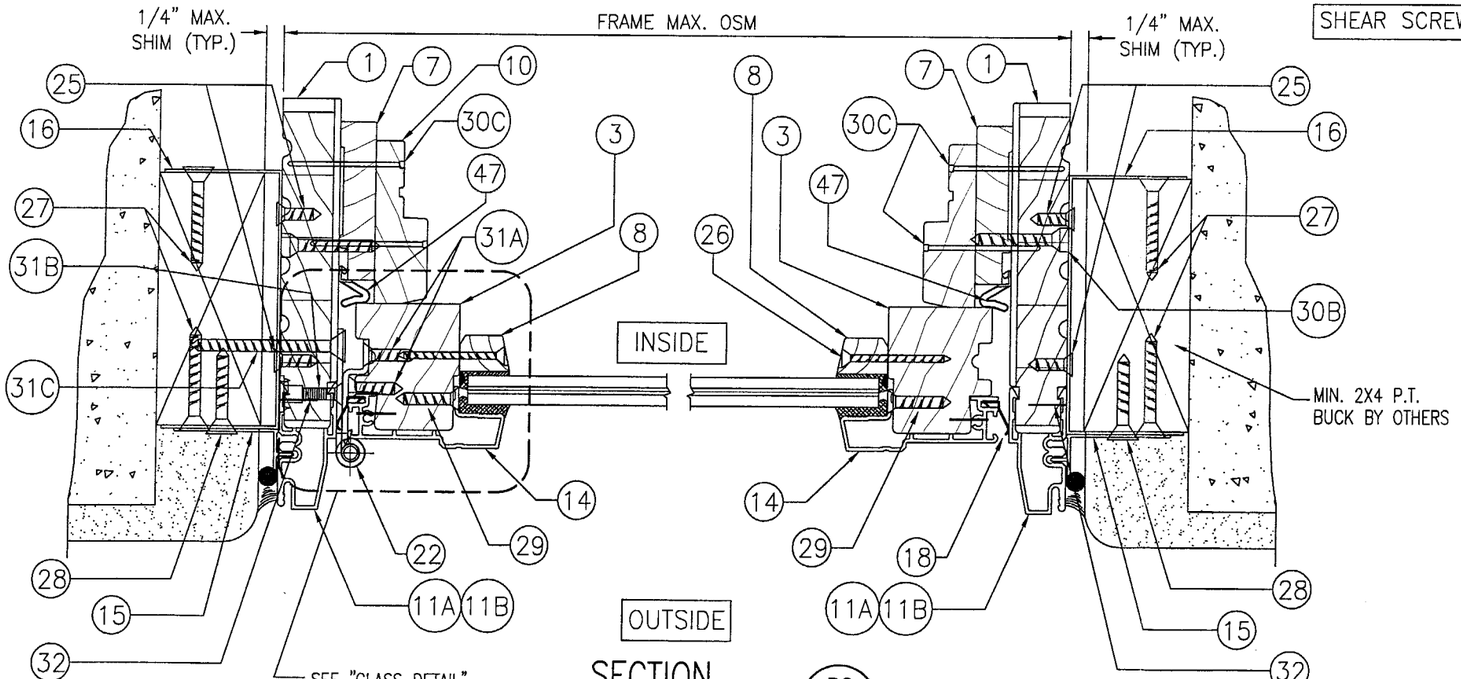

SECTION D2/6

SCALE: HALF FULL SIZE

CLIP INSTALLATION

PRODUCT REVISED
as complying with the Florida Building Code
Acceptance No 03-0625.05
Expiration Date 09/27/04
By Glenda Berman
Miami Dade Product Control Division

DRAWN BY: K.P.S.	CHECKED BY: W.W.S.
PLOT: 1=2	DATE: 05/13/03

NO.	REVISION DESCRIPTION	BY	DATE

DRAWING TITLE
ALUMINUM CLAD WOOD OPERABLE CASEMENT IMPACT WINDOWS

MANUFACTURER
KML WINDOWS, INC.
23 BUCHANAN COURT
LONDON, ONTARIO, CANADA N5Z4P9
(519) 681-7012

CONSULTANTS
W. W. SCHAEFER ENGINEERING & CONSULTING, P.A.
8895 N. MILITARY TRAIL; SUITE C-204
PALM BEACH GARDENS, FL 33410
PHONE: 561-775-4902 FAX: 561-775-4903

CERTIFICATION
JUN 18 2003
WARREN W. SCHAEFER, P.E.
P.E. NO. 44135

DRAWING NO. 1227A
REV.

SHEET NO. 6 OF 9

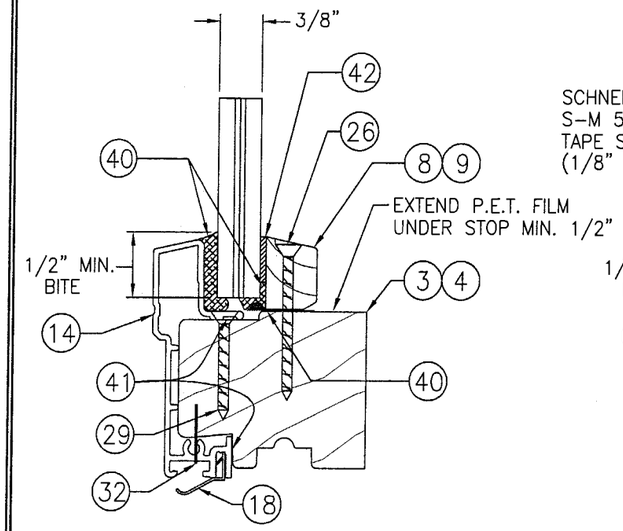

TYPICAL GLASS & GLAZING DETAIL

SCALE: 3/4 FULL SIZE

(NEBULA GLASSLAM SAFETY-PLUS)

GLASS OPTION 1: 3/8" THICK NEBULA SAFETY-PLUS (1/8" AN/0.06" RESIN/ 0.01" PET/0.06" RESIN/1/8" AN)

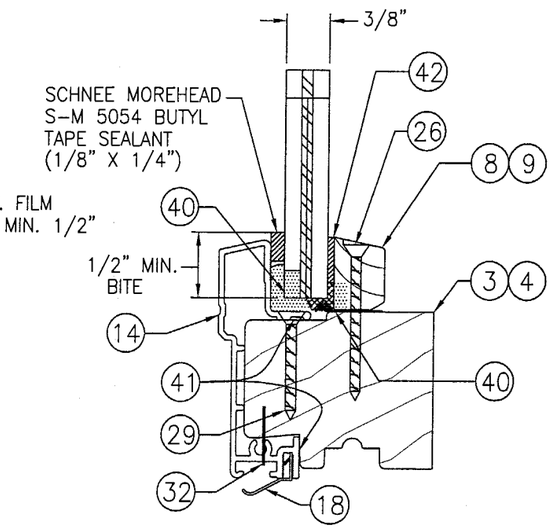

TYPICAL GLASS & GLAZING DETAIL

SCALE: 3/4 FULL SIZE

(DUPONT PVB WITH DLUBAK STEP)

GLASS OPTION 2: 3/8" THICK DUPONT DLUBAK "STEP GLASS" (1/8" TEMPERED/0.120" PVB/1/8" TEMPERED)

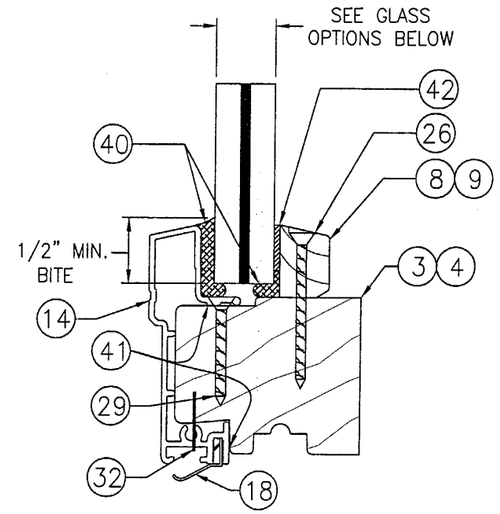

TYPICAL GLASS & GLAZING DETAIL

SCALE: 3/4 FULL SIZE

(SAFLEX PVB)

GLASS OPTION 3: 9/16" THICK LAMINATED GLASS WITH SAFLEX PVB(1/4" AN/0.09" PVB/1/4" AN)

GLASS OPTION 4: 3/8" THICK LAMINATED GLASS WITH SAFLEX PVB (5/32" AN/0.09" PVB/5/32" AN)

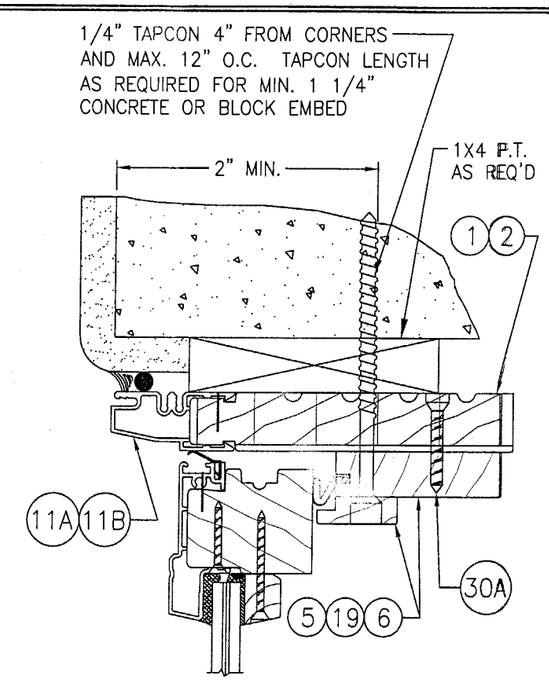

OPTIONAL JAMB DETAIL FOR DIRECT MOUNT TO CONCRETE OR BLOCK

(TYP. ALL UNITS)

SCALE: 1/2 FULL SIZE

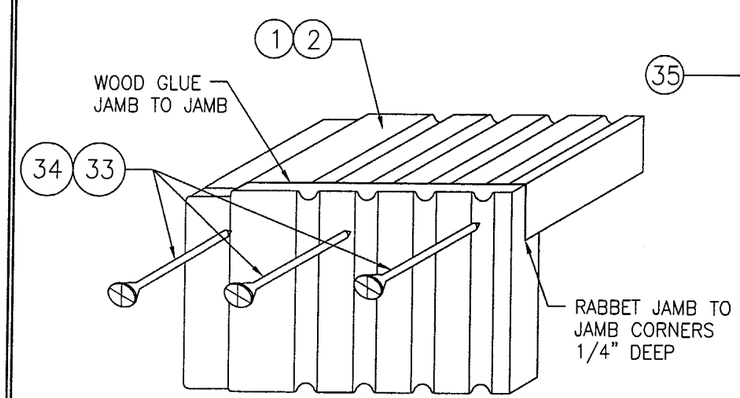

JAMB TO JAMB DETAIL

SCALE: N.T.S.

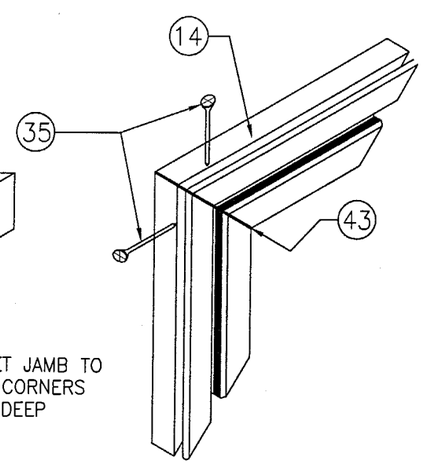

CLAD TO CLAD DETAIL

SCALE: N.T.S.

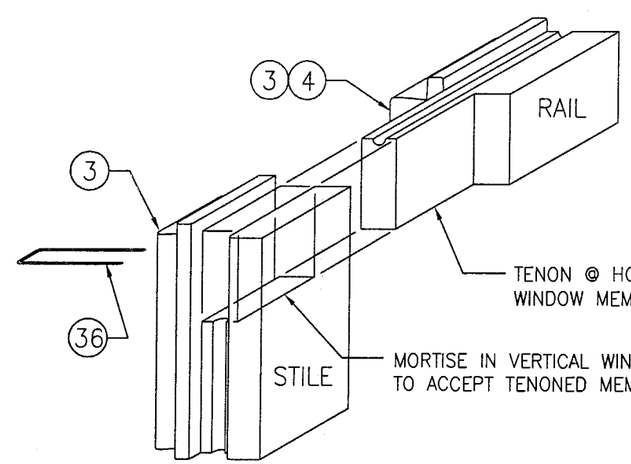

NOTE:
STILES & RAILS SECURED WITH PVA WOOD GLUE @ MORTISE & TENON JOINTS IN ADDITION TO BRAD NAILS

SASH STILE TO RAIL CORNER DETAIL

SCALE: N.T.S.

NOTE: CLAD CORNER IS MITERED & FASTENED WITH 1 NO. 6 X 1" SMS (26) INTO SPLINE & GASKETED WITH (31) (SIMILAR TO JAMB CLAD CORNERS)

JAMB CORNER DETAILS

PRODUCT REVISED
as complying with the Florida Building Code
Acceptance No. 03-0625.05
Expiration Date 09/27/04
By [signature]
Miami Dade Product Control Division

DRAWN BY: K.P.S.	CHECKED BY: W.W.S.
PLOT: 1=2	DATE: 05/13/03

NO.	REVISION DESCRIPTION	BY	DATE

IMPACT WINDOWS

OPERABLE ALUMINUM CLAD WOOD WINDOWS, INC.

MANUFACTURER
23 BUCHANAN COURT
LONDON, ONTARIO, CANADA N5Z4P9
(519) 681-7012

DRAWING TITLE

CONSULTANTS
W. W. SCHAEFER ENGINEERING & CONSULTING, P.A.
8895 N. MILITARY TRAIL; SUITE C-204
PALM BEACH GARDENS, FL 33410
PHONE: 561-775-4902 FAX: 561-775-4903

CERTIFICATION
JUN 18 2003
WARREN W. SCHAEFER, P.E.
P.E. NO. 44135

DRAWING NO. 1227A
REV.
SHEET NO. 7 OF 9

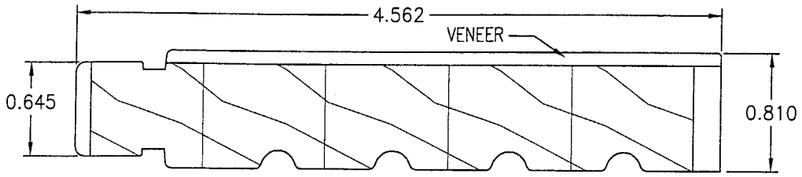

1 LINEAL WOOD FRAME JAMB
PONDEROSA PINE LAMINATED IN 5 BLOCKS

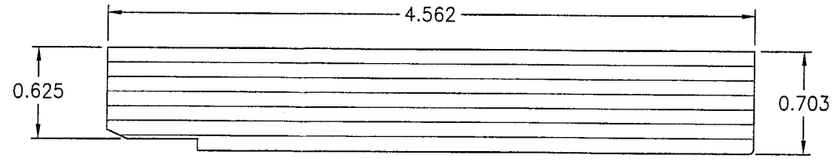

2 RADIAL WOOD FRAME JAMB
(LAMINATED VENEER)

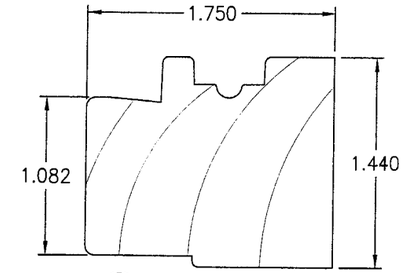

3 LINEAL SASH

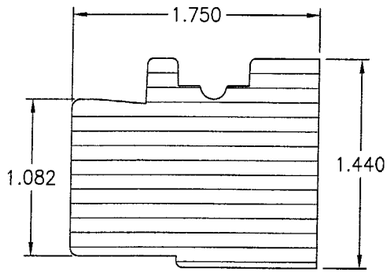

4 RADIAL SASH
(LAMINATED VENEER)

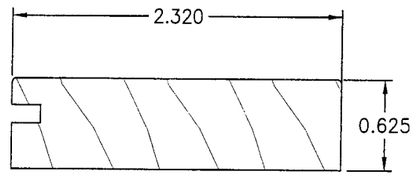

5 WEATHERSEAL ADAPTER

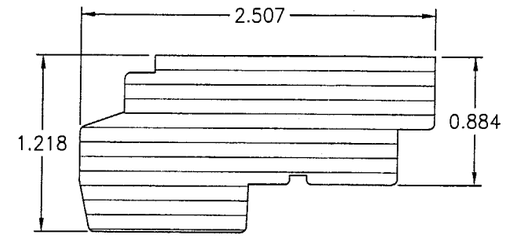

6 RADIAL SASH STOP
(LAMINATED VENEER)

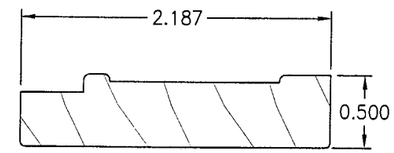

7 LINEAL SASH STOP & W.S.A.

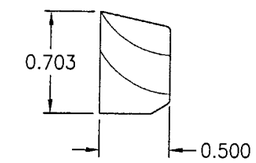

8 LINEAL WOOD GLAZING STOP

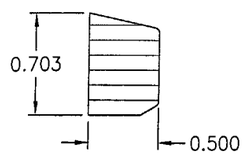

9 RADIAL WOOD GLAZING STOP
(LAMINATED VENEER)

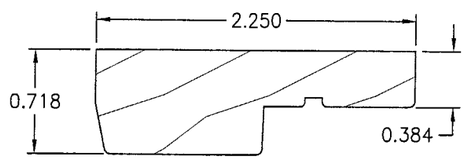

10 LINEAL SASH STOP COVER

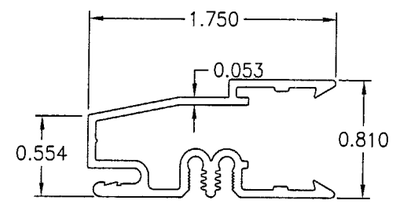

11A LINEAL JAMB CLADDING
(6063-T5 ALUMINUM)

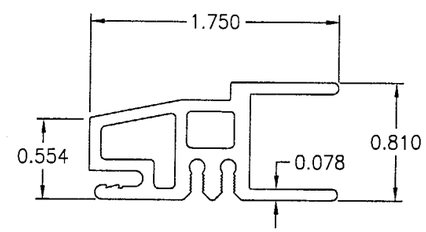

11B RADIAL FRAME CLADDING
(6063-T5 ALUMINUM)

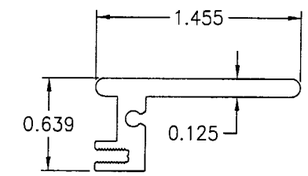

12 RADIAL SASH CLADDING
(6063-T5 ALUMINUM)

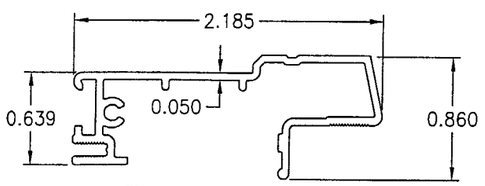

14 LINEAL SASH CLADDING
(6063-T5 ALUMINUM)

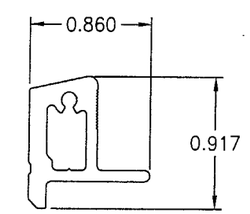

13 RADIAL GLASS STOP
(6063-T5 ALUMINUM)

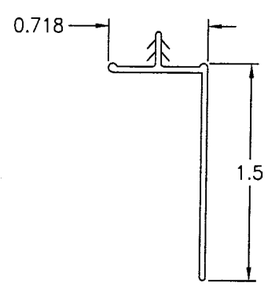

15 NAILING FIN
(VINYL)

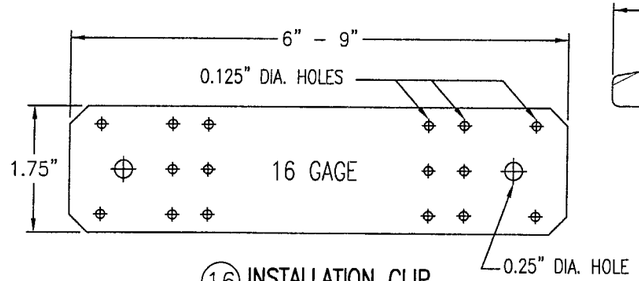

16 INSTALLATION CLIP
(GALVANIZED STEEL)
Fy = 33 ksi MIN.

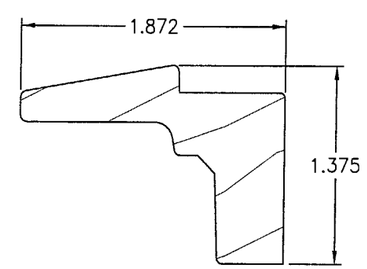

17 OPERATOR COVER

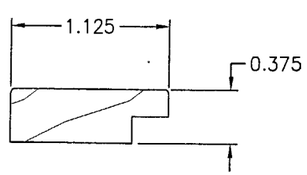

19 LINEAL SCREEN STOP

PRODUCT REVISED
as complying with the Florida Building Code
Acceptance No 03-0625.05
Expiration Date 09/27/04
By [signature]
Miami Dade Product Control Division

DRAWN BY: K.P.S.	CHECKED BY: W.W.S.
PLOT: 1=1	DATE: 05/13/03

NO.	REVISION DESCRIPTION	BY	DATE

DRAWING TITLE
ALUMINUM CLAD WOOD OPERABLE CASEMENT IMPACT WINDOWS

MANUFACTURER
KML WINDOWS, INC.
23 BUCHANAN COURT
LONDON, ONTARIO, CANADA N5Z4P9
(519) 681-7012

CONSULTANTS
W. W. SCHAEFER ENGINEERING & CONSULTING, P.A.
8895 N. MILITARY TRAIL; SUITE C-204
PALM BEACH GARDENS, FL 33410
PHONE: 561-775-4902 FAX: 561-775-4903

CERTIFICATION
JUN 18 2003
WARREN W. SCHAEFER, P.E.
P.E. NO. 44135

DRAWING NO. 1227A
REV.
SHEET NO. 8 OF 9

MATERIAL LIST

PART NO.	REF. NO.	DESCRIPTION	NOTES
		PARTS & EXTRUSIONS	
1	PF1010	LINEAL JAMB	SEE NOTE 1 THIS SHEET.
2	PF1231	RADIAL JAMB	LAMINATED VENEER
3	PF1007	LINEAL SASH	SEE NOTE 1 THIS SHEET.
4	PF1015	RADIAL SASH	LAMINATED VENEER
5	PF1024	WEATHERSEAL ADAPTER	SEE NOTE 1 THIS SHEET.
6	PF1005	RADIAL SASH STOP	LAMINATED VENEER
7	PF1351	LINEAL SASH STOP W.S.A.	SEE NOTE 1 THIS SHEET.
8	PF1011	LINEAL GLAZING STOP	SEE NOTE 1
9	PF1011	RADIAL GLAZING STOP	LAMINATED VENEER
10	PF1485	LINEAL SASH STOP\COVER	SEE NOTE 1 THIS SHEET.
11A	PF1001	LINEAL JAMB CLADDING	ALUMINUM 6063-T5
11B	PF1002	RADIAL JAMB CLADDING	ALUMINUM 6063-T5
12	PF1018	RADIAL SASH CLADDING	ALUMINUM 6063-T5
13	PF1017	RADIAL GLASS STOP	ALUMINUM 6063-T5
14	PF1074	LINEAL SASH CLADDING	ALUMINUM 6063-T5
15	PF1214 OR PF1326	VINYL NAILING FINS	OPTIONAL WITH SHEAR SCREW INSTALLATION
16	SK1031	GALV. 16 GA. STEEL INSTALLATION CLIP (Fy = 33 KSI MIN.)	GALVANIZED STEEL, INC. MAX. 4" FROM CORNERS & 12" O.C.
17	PF1009	OPERATOR COVER	SEE NOTE 1 THIS SHEET.
18	PF1026	0.415" X 0.489" RAINSKIRT	SCHLEGEL: EXTRUDED FLEXIBLE COPOLYMER
19	PF1012	LINEAL SCREEN STOP	SEE NOTE 1 THIS SHEET.
20	–	OPEN	
21	–	CONCEALED MULTI-POINT LOCK	MIRAGE 16 SERIES MULTI-POINT SYSTEM
22	SK1002	KML S.S. BUTT HINGE	FOR USE WITH ALL WINDOW SHAPES
23	–	SINGLE ARM OPERATOR	TRUTH HARDWARE ENTRYGUARD OR EQUAL
		FASTENERS	
24A	–	#10 SMS JAMB SHEAR SCREW	WITHIN 4" FROM CORNERS & MAX. 12" O.C.
24B	–	#10 SMS JAMB SHEAR SCREW	1 ADDITIONAL EA. SIDE OF MULLION ENDS
25	–	#8 x 5/8" PAN HEAD SMS SCREW	2 PER CLIP INTO JAMB
26	–	#6 X 1 5/8" SMS SCREW	WITHIN 3" FROM CORNERS & MAX. 8" O.C.
27	–	#8 x 1 1/4" SMS SCREW	2 PER CLIP INTO BUCK (1 EA. SIDE OF BUCK)
28	–	S.S. #8 x 1 1/4" SMS SCREW OR 1 5/8" DRYWALL SCREWS	WITHIN 4" FROM ENDS & MAX. 10 1/2" O.C. WITH FIN
29	–	#6 x 3/4" SMS SCREW	WITHIN 3" FROM CORNERS & 8" O.C.

MATERIAL LIST

PART NO.	REF. NO.	DESCRIPTION	NOTES
30A	–	#8 x 1 1/4" SMS SCREW	4" FROM CORNERS & 8" O.C. (AT RADIAL SASH STOPS)
30B	–	#8 x 1" SMS SCREW	4" FROM CORNERS & 8" O.C. (AT LINEAL SASH STOPS)
30C	–	F-14 X 1 5/8" BRAD NAILS	2 @ 4" FROM CORNERS & 8" O.C. @ SIDES
31A	–	#8 X 1" SMS SCREW	5 PER HINGE LEAF INTO SASH (S/S OR BRASS)
31B	–	10-24 FH MACH SCREW W/T-NUT	2 PER HINGE LEAF INTO JAMB (S/S OR BRASS)
31C	–	#10 x 3" SMS SCREW	2 PER HINGE LEAF INTO BUCK (S/S OR BRASS)
32	–	3/8" LONG STAPLE	WITHIN 3" FROM CORNERS & MAX. 8" O.C
33	–	#8 x 2" SMS SCREW	3 @ EACH RECTANGULAR JAMB CORNER
34	–	#8 x 1 1/2" SMS SCREW	3 @ EACH RADIUS JAMB CORNER
35	–	#6 x 3/4" SMS SCREW	2 @ EACH CLAD CORNER INTO CLAD SPLINES
36	–	16 GA. x 1 1/2" LONG STAPLE	1 @ EXTERIOR SIDE OF SASH STILE & RAIL MORTISE & TENON CONNECTION
37	–	JAMB JACK III	TRUTH HARDWARE NO. 21150: @ HINGE JAMB 1 WITH EA. JAMB JACK SCREW
38	–	JAMB JACK III SCREW	TRUTH HARDWARE NO. 21171: @ HINGE JAMB 3.15" LONG; 1 PER WINDOW @ SHAPED UNITS
		SEALANTS	
40	–	DOW 995 SILICONE	FOR 1/2" GLAZING BITE
41	–	STRUCTURAL SILICONE ADHESIVE	DOW 1199 CONTINUOUS CLADDING TO JAMB
		OTHER	
42	–	NORTON NORGLAZE .0625" X .437" GLAZING TAPE	POLYOLEFIN FOAM W/ ACRYLIC ADHESIVE
43	–	TREMCO 440 BUTYL TAPE GASKET	TRIM OFF AT EDGES (TYP. AT JAMB & SASH CLAD CORNERS)
47	PF1013	FRAME WEATHERSEAL	MONSANTO "SANTOPRENE": FOAMED ELASTOMERIC

1. ALL WOOD USED WITH TESTED UNITS IS MINIMUM GRADE 2 PONDEROSA PINE (JAMBS ARE 5-BLOCK LAMINATED STAGE BLOCK). ALTERNATE WOOD SPECIES ACCEPTABLE WITH THIS PRODUCT ARE THE FOLLOWING MINIMUM GRADE 2 WOODS: (JAMBS MUST BE 5-BLOCK LAMINATED):
   1. MAHOGANY
   2. OAK
   3. CHERRY
   4. CYPRUS
   5. DOUGLAS FIR
   6. MAPLE
   7. TEAK

PRODUCT REVISED
as complying with the Florida Buiding Code
Acceptance No. 03-0625.05
Expiration Date 09/27/04
By [signature]
Miami Dade Product Control Division

DRAWN BY: K.P.S.	CHECKED BY: W.W.S.
PLOT: 1=1	DATE: 05/13/03

NO.	REVISION DESCRIPTION	BY	DATE

DRAWING TITLE
ALUMINUM CLAD WOOD OPERABLE CASEMENT IMPACT WINDOWS

MANUFACTURER
KML WINDOWS, INC.
23 BUCHANAN COURT
LONDON, ONTARIO, CANADA N5Z4P9
(519) 681-7012

CONSULTANTS
W. W. SCHAEFER ENGINEERING & CONSULTING, P.A.
8895 N. MILITARY TRAIL; SUITE C-204
PALM BEACH GARDENS, FL 33410
PHONE: 561-775-4902 FAX: 561-775-4903

CERTIFICATION
JUN 18 2003
WARREN W. SCHAEFER, P.E.
P.E. NO. 44135

DRAWING NO. 1227A
REV.

SHEET NO. 9 OF 9