MIAMI-DADE

BUILDING CODE COMPLIANCE OFFICE (BCCO)
PRODUCT CONTROL DIVISION

MIAMI-DADE COUNTY, FLORIDA
METRO-DADE FLAGLER BUILDING
140 WEST FLAGLER STREET, SUITE 1603
MIAMI, FLORIDA 33130-1563
(305) 375-2901 FAX (305) 375-2908

NOTICE OF ACCEPTANCE (NOA)

T.M. Window & Door Co.
601 N.W. 12th Avenue
Pompano Beach, FL 33069

SCOPE:
This NOA is being issued under the applicable rules and regulations governing the use of construction materials. The documentation submitted has been reviewed by Miami-Dade County Product Control Division and accepted by the Board of Rules and Appeals (BORA) to be used in Miami Dade County and other areas where allowed by the Authority Having Jurisdiction (AHJ).

This NOA shall not be valid after the expiration date stated below. The Miami-Dade County Product Control Division (In Miami Dade County) and/or the AHJ (in areas other than Miami Dade County) reserve the right to have this product or material tested for quality assurance purposes. If this product or material fails to perform in the accepted manner, the manufacturer will incur the expense of such testing and the AHJ may immediately revoke, modify, or suspend the use of such product or material within their jurisdiction. BORA reserves the right to revoke this acceptance, if it is determined by Miami-Dade County Product Control Division that this product or material fails to meet the requirements of the applicable building code.
This product is approved as described herein, and has been designed to comply with the High Velocity Hurricane Zone of the Florida Building Code.

DESCRIPTION: Series 249 Outswing Aluminum French Doors w/Sidelites (Reinforced)

APPROVAL DOCUMENT: Drawing No. **W03-45**, dated 06/20/03, titled "Series-249 Alum Out-Swing Door W/ Sidelites (N.I.) ", sheets 1 through 7, prepared by Al Farooq Corporation, signed and sealed by Humayoun Farooq, P.E., bearing the Miami-Dade County Product Control Approval stamp with the Notice of Acceptance number and approval date by the Miami-Dade County Product Control Division.

MISSILE IMPACT RATING: None`

LABELING: Each unit shall bear a permanent label with the manufacturer's name or logo, city, state and following statement: "Miami-Dade County Product Control Approved", unless otherwise noted herein.

RENEWAL of this NOA shall be considered after a renewal application has been filed and there has been no change in the applicable building code negatively affecting the performance of this product.

TERMINATION of this NOA will occur after the expiration date or if there has been a revision or change in the materials, use, and/or manufacture of the product or process. Misuse of this NOA as an endorsement of any product, for sales, advertising or any other purposes shall automatically terminate this NOA. Failure to comply with any section of this NOA shall be cause for termination and removal of NOA.

ADVERTISEMENT: The NOA number preceded by the words Miami-Dade County, Florida, and followed by the expiration date may be displayed in advertising literature. If any portion of the NOA is displayed, then it shall be done in its entirety.

INSPECTION: A copy of this entire NOA shall be provided to the user by the manufacturer or its distributors and shall be available for inspection at the job site at the request of the Building Official.
This NOA **revises and renews NOA # 99-0902.04** and consists of this page 1 as well as approval document mentioned above.
The submitted documentation was reviewed by **Manuel Perez, P.E.**

PRODUCT CONTROL ACCEPTED

T.M. Window & Door Co.

NOTICE OF ACCEPTANCE: EVIDENCE SUBMITTED

(For File ONLY. Not part of NOA)

A. DRAWINGS

1. Manufacturer's die drawings and sections.
2. Drawing No. **W03-45**, dated 06/20/03, titled "Series-249 Alum Out-Swing Door W/ Sidelites (N.I.) ", sheets 1 through 7, prepared by Al Farooq Corporation, signed and sealed by Humayoun Farooq, P.E.,

B. TESTS

1. Test reports on 1) Air Infiltration Test, per PA 202-94
   2) Uniform Load Static Air Pressure Test, per PA 202-94
   3) Water Resistant test, per PA 202-94
   4) Forced Entry Resistance Test, per SFBC3603.2 (b) 5.

   Along with installation diagram of an outswing doors w\sidelite prepared by Certified Testing Laboratories, Test Report No.**CTLA-136W-1, 2,3,4,5,6** dated 12/03/96 thru 12/07/96, signed and sealed by Ramesh Patel, P.E. (Test report was revised by addendum letter dated 07-16-1999, issued by CTL, signed and sealed by Ramesh Patel, P.E.) ***(Submitted under NOA #99-0902.04)***

C. CALCULATIONS

1. Structural performance, comparative analysis and anchor verification calculations for Series 249 Outswing Aluminum French Door with Sidelites – Non-Impact, dated November 12, 2001, prepared by Al-Farooq Corporation, signed and sealed by Humayoun Farooq, P.E.

D. MATERIAL CERTIFICATIONS

1. None.

E. STATEMENTS

1. Statement letter of conformance, dated June 26, 2003, signed and sealed by Humayoun Farooq, P.E.
2. Statement letter of no financial interest, dated June 26, 2003, signed and sealed by Humayoun Farooq, P.E.
   (Submitted under NOA #99-0902.04)
3. Statement letter of compliance, as a part of test report, dated 12-03-99 thru 12-09-99, prepared by Certified Testing Laboratories., signed and sealed by Ramesh Patel, P.E.
4. Addendum letter to test report CTLA-136W-1, 2,3,4,5&6 dated July 16, 1999, prepared by Certified Testing Laboratories, signed by Jim Blakely.
5. Special project #99-0061
6. Various correspondence between manufacturer and this office, for qualification of various models

F. OTHER

1. Notice of Acceptance No. **99-0902.04**, issued to T.M. Window & Door Co. for their Series 249 Outswing Alum. French Door w/Sidelites, approved on 06/29/00 and expiring on 06/29/03.

Manuel Perez, P.E.
Product Control Examiner
NOA No 03-0630.07
Expiration Date: June 29, 2008
Approval Date: August 14, 2003

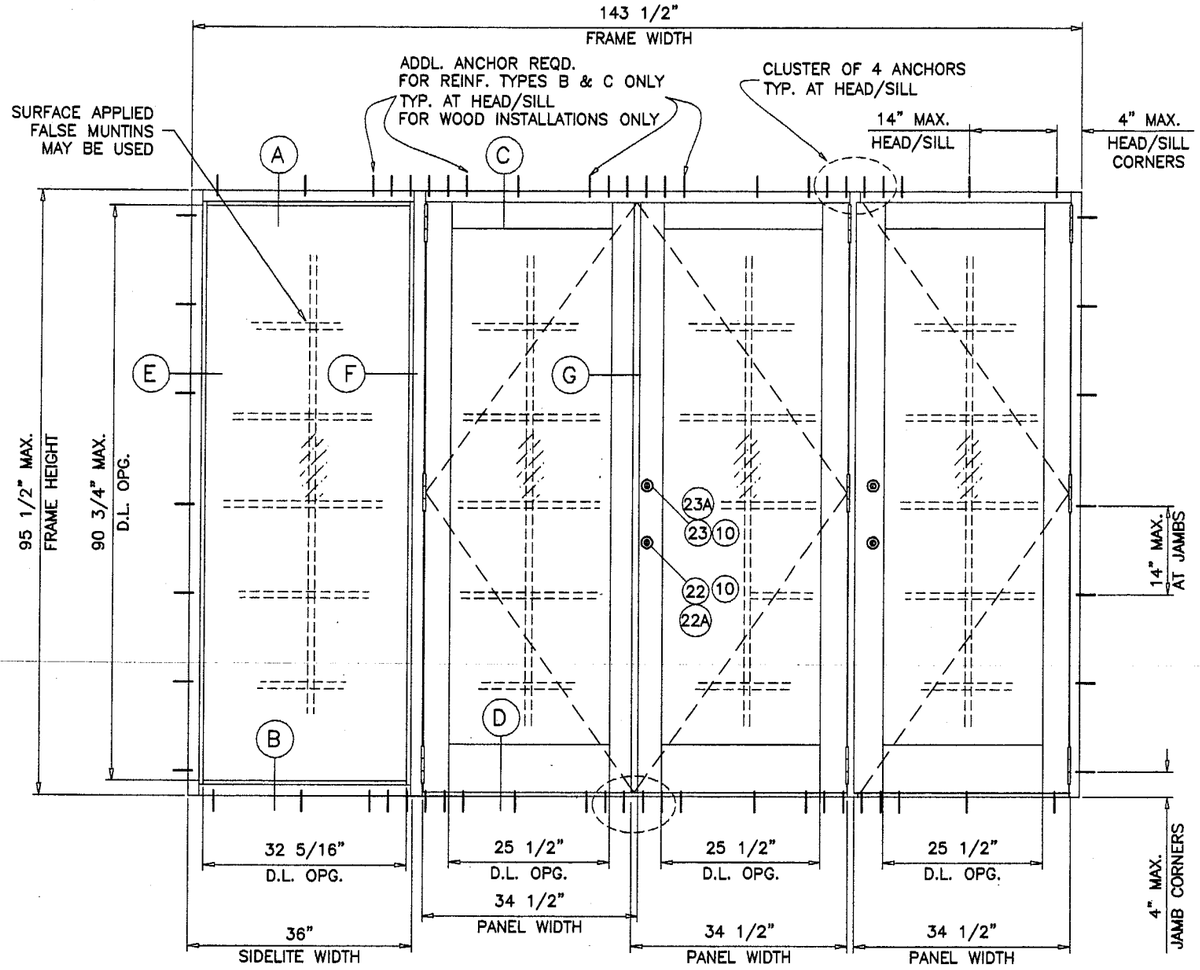

(OXXO)

TYPICAL ELEVATION

TESTED UNIT

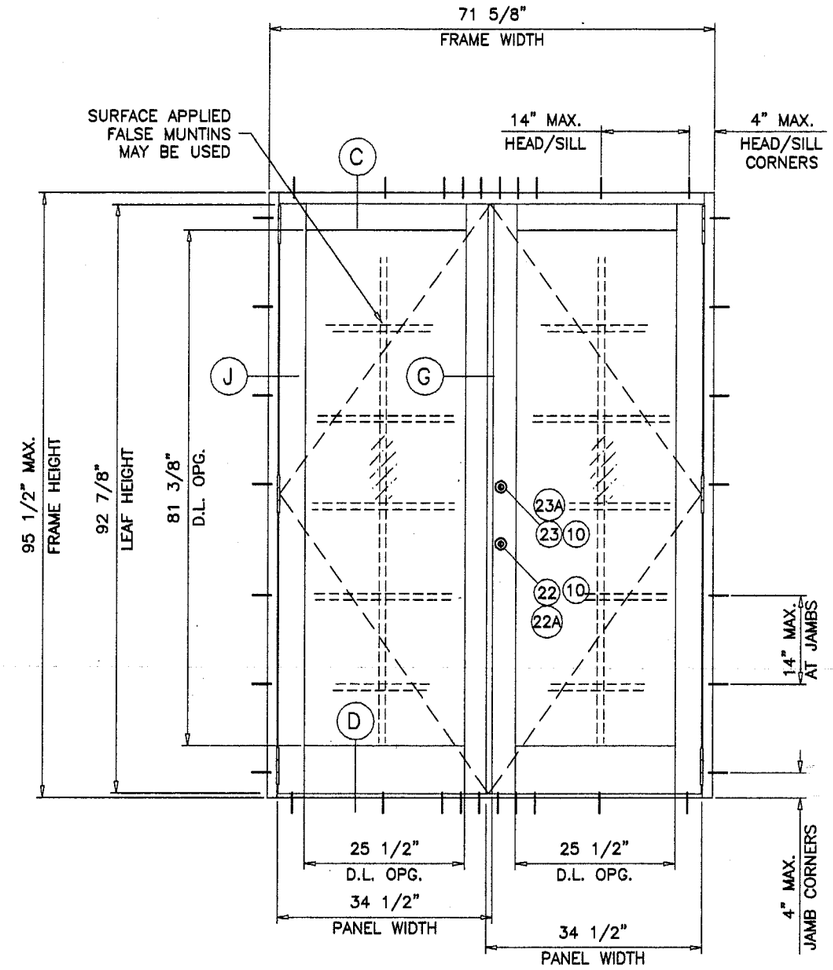

(XX)

SERIES-249 ALUM OUT-SWING DOOR W/ SIDELITES

APPROVAL APPLIES TO SINGLE (X) AND DOUBLE (XX) LEAF DOORS WITH OR WITHOUT SIDELITES.

DOORS/SIDELITES ARE NOT RATED FOR IMPACT, AND REQUIRE PROTECTION BY MIAMI-DADE COUNTY APPROVED IMPACT RESISTANT SHUTTERS.

SEE SHEET 2 FOR DESIGN LOAD CAPACITY OF DOORS AND SIDELITES.

THIS PRODUCT IS DESIGNED TO COMPLY WITH THE HIGH VELOCITY HURRICANE ZONE OF THE 2001 FLORIDA BUILDING CODE.
ALSO FOR WIND LOADS AS PER ASCE 7-88. ASCE 7-93, ASCE 7-95 OR ASCE 7-98 AS REQUIRED BY PREVAILING BUILDING CODE.

WOOD BUCKS BY OTHERS, MUST BE ANCHORED PROPERLY TO TRANSFER LOADS TO THE STRUCTURE.

ANCHORS SHALL BE AS LISTED, SPACED AS SHOWN ON DETAILS. ANCHOR EMBEDMENT TO BASE MATERIAL SHALL BE BEYOND WALL DRESSING OR STUCCO.

ANCHORING OR LOADING CONDITIONS NOT SHOWN IN THESE DETAILS ARE NOT PART OF THIS APPROVAL.

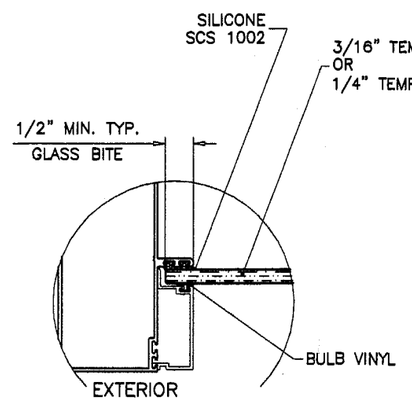

SIDELITE

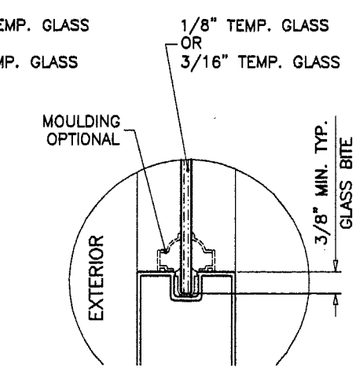

PANEL

GLAZING DETAILS

Engr: DR. HUMAYOUN FAROOQ
STRUCTURES
FLA. PE # 16557
C.A.N. 3539

JUN 27 2003

Approved as complying with the Florida Buiding Code
Date AUG. 14, 2003
NOA# 03-0630.07
Miami Dade Product Control Division
By Manuel Perez

AL-FAROOQ CORPORATION
ENGINEERS, PLANNERS & PRODUCT DESIGN
1235 SW 87 AVE
MIAMI, FLORIDA 33174
TEL. (305) 264-8100 FAX. (305) 262-6978

COMP-ANL\W03-45TMW

SERIES-249 ALUM OUT-SWING DOOR W/ SIDELITES (N.I.)

TM WINDOW AND DOOR
601 N.W. 12TH AVE.
POMPANO BEACH, FL. 33069
TEL. (954) 781-4430 FAX. (954) 781-5078

revisions:

no	date	by	description

date: 06-20-03
scale: 1/2"=1'-0"
dr. by: HAMID
chk. by:

drawing no.
W03-45

CHART #1

DESIGN LOAD CAPACITY – PSF (SINGLE LEAF DOORS WITH HIGH RISE SILL) *

FRAME HEIGHT FT.–IN.	DOOR WIDTH FT.–IN.	1/8" TEMP. GLASS								3/16" TEMP. GLASS							
		REINFORCING 'N'		REINFORCING 'A'		REINFORCING 'B'		REINFORCING 'C'		REINFORCING 'N'		REINFORCING 'A'		REINFORCING 'B'		REINFORCING 'C'	
		EXT. (+)	INT. (–)	EXT. (+)	INT. (–)	EXT. (+)	INT. (–)	EXT. (+)	INT. (–)	EXT. (+)	INT. (–)	EXT. (+)	INT. (–)	EXT. (+)	INT. (–)	EXT. (+)	INT. (–)
6'–8"	2'–8"	73.1	73.1	80.0	73.1	80.0	94.0	80.0	94.0	73.1	73.1	80.0	73.1	80.0	124.2	80.0	175.4
	3'–0"	64.1	64.1	70.5	64.1	78.8	78.8	78.8	78.8	64.1	64.1	70.5	64.1	80.0	108.9	80.0	153.8
	3'–2"	60.4	60.4	66.4	60.4	74.8	74.8	74.8	74.8	60.4	60.4	66.4	60.4	80.0	96.6	80.0	144.9
8'–0"	2'–8"	60.5	60.5	66.6	60.5	80.0	86.0	80.0	86.0	60.5	60.5	66.6	60.5	80.0	102.9	80.0	145.3
	3'–0"	53.1	53.1	58.4	53.1	65.2	65.2	65.2	65.2	53.1	53.1	58.4	53.1	80.0	90.2	80.0	127.4
	3'–2"	50.0	50.0	55.0	50.0	59.6	59.6	59.6	59.6	50.0	50.0	55.0	50.0	80.0	85.0	80.0	120.0

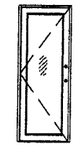

(X)

CHART #2

DESIGN LOAD CAPACITY – PSF (DUAL LEAF DOORS WITH HIGH RISE SILL) *

FRAME HEIGHT FT.–IN.	DOOR WIDTH FT.–IN.	1/8" TEMP. GLASS								3/16" TEMP. GLASS							
		REINFORCING 'N'		REINFORCING 'A'		REINFORCING 'B'		REINFORCING 'C'		REINFORCING 'N'		REINFORCING 'A'		REINFORCING 'B'		REINFORCING 'C'	
		EXT. (+)	INT. (–)	EXT. (+)	INT. (–)	EXT. (+)	INT. (–)	EXT. (+)	INT. (–)	EXT. (+)	INT. (–)	EXT. (+)	INT. (–)	EXT. (+)	INT. (–)	EXT. (+)	INT. (–)
6'–8"	5'–0"	73.1	73.1	80.0	73.1	80.0	94.0	80.0	94.0	73.1	73.1	80.0	73.1	80.0	124.2	80.0	175.4
	5'–6"	66.1	66.1	72.7	66.1	80.0	81.6	80.0	81.6	66.1	66.1	72.7	66.1	80.0	105.8	80.0	153.8
	6'–0"	60.4	60.4	66.4	60.4	74.8	74.8	74.8	74.8	60.4	60.4	66.4	60.4	80.0	96.6	80.0	144.9
8'–0"	5'–0"	60.5	60.5	66.6	60.5	80.0	86.0	80.0	86.0	60.5	60.5	66.6	60.5	80.0	102.9	80.0	145.3
	5'–6"	54.8	54.8	60.2	54.8	68.8	68.8	68.8	68.8	54.8	54.8	60.2	54.8	80.0	87.6	80.0	127.4
	6'–0"	50.0	50.0	55.0	50.0	59.6	59.6	59.6	59.6	50.0	50.0	55.0	50.0	80.0	85.0	80.0	120.0

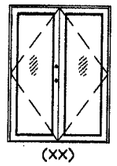

(XX)

CHART #3

DESIGN LOAD CAPACITY – PSF (SIDELITES WITH SINGLE LEAF DOORS) EXT.(+) & INT.(–)

FRAME HEIGHT INCHES	DOOR WIDTH FT.–IN.	3/16" TEMP. GLASS												1/4" TEMP. GLASS											
		REINFORCING 'N' & 'A'				REINFORCING 'B'				REINFORCING 'C'				REINFORCING 'N' & 'A'				REINFORCING 'B'				REINFORCING 'C'			
		SIDELITE WIDTH				SIDELITE WIDTH				SIDELITE WIDTH				SIDELITE WIDTH				SIDELITE WIDTH				SIDELITE WIDTH			
		24 IN.	30 IN.	36 IN.	42 IN.	24 IN.	30 IN.	36 IN.	42 IN.	24 IN.	30 IN.	36 IN.	42 IN.	24 IN.	30 IN.	36 IN.	42 IN.	24 IN.	30 IN.	36 IN.	42 IN.	24 IN.	30 IN.	36 IN.	42 IN.
79–1/2"	2'–8"	80.2	72.1	65.6	60.1	136.3	122.6	107.2	101.6	193.2	131.2	107.2	101.6	80.2	72.1	65.6	60.1	136.3	122.6	111.4	102.1	193.2	173.8	143.2	128.4
	3'–0"	76.0	68.7	62.7	57.7	129.1	116.7	106.5	98.0	183.0	131.2	107.2	101.6	76.0	68.7	62.7	57.7	129.1	116.7	106.5	98.0	183.0	165.5	143.2	128.4
	3'–2"	72.1	65.6	60.1	55.4	122.6	111.4	102.1	94.2	173.8	131.2	107.2	101.6	72.1	65.6	60.1	55.4	122.6	111.4	102.1	94.2	173.8	157.9	143.2	128.4
95–1/2"	2'–8"	66.8	60.1	54.6	–	113.4	102.1	89.6	–	160.8	120.8	89.6	–	66.8	60.1	54.6	–	113.4	102.1	92.7	–	160.8	144.7	122.4	–
	3'–0"	63.2	57.2	52.2	–	107.4	97.2	88.7	–	152.3	120.8	89.6	–	63.2	57.2	52.2	–	107.4	97.2	88.7	–	152.3	137.7	122.4	–
	3'–2"	60.1	54.6	50.0	–	102.1	92.7	85.0	–	144.7	120.8	89.6	–	60.1	54.6	50.0	–	102.1	92.7	85.0	–	144.7	131.5	120.5	–

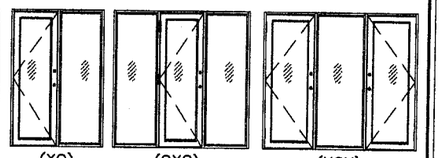

(XO)
(OX)

(OXO)

(XOX)

CHART #4

DESIGN LOAD CAPACITY – PSF (SIDELITES WITH DUAL LEAF DOORS) EXT.(+) & INT.(–)

FRAME HEIGHT INCHES	DOOR WIDTH FT.–IN.	3/16" TEMP. GLASS												1/4" TEMP. GLASS											
		REINFORCING 'N' & 'A'				REINFORCING 'B'				REINFORCING 'C'				REINFORCING 'N' & 'A'				REINFORCING 'B'				REINFORCING 'C'			
		SIDELITE WIDTH				SIDELITE WIDTH				SIDELITE WIDTH				SIDELITE WIDTH				SIDELITE WIDTH				SIDELITE WIDTH			
		24 IN.	30 IN.	36 IN.	42 IN.	24 IN.	30 IN.	36 IN.	42 IN.	24 IN.	30 IN.	36 IN.	42 IN.	24 IN.	30 IN.	36 IN.	42 IN.	24 IN.	30 IN.	36 IN.	42 IN.	24 IN.	30 IN.	36 IN.	42 IN.
79–1/2"	5'–0"	80.1	72.1	65.5	60.1	136.3	122.6	107.2	101.6	192.6	131.2	107.2	101.6	80.1	72.1	65.5	60.1	136.3	122.6	111.5	102.2	192.6	173.3	143.2	128.4
	5'–6"	74.6	67.6	61.8	56.9	126.9	115.0	105.1	96.8	179.3	131.2	107.2	101.6	74.6	67.6	61.8	56.9	126.9	115.0	105.1	96.8	179.3	162.5	143.2	128.4
	6'–0"	72.1	65.5	60.1	55.4	122.6	111.5	102.2	94.3	173.3	131.2	107.2	101.6	72.1	65.5	60.1	55.4	122.6	111.5	102.2	94.3	173.3	157.5	143.2	128.4
95–1/2"	5'–0"	66.7	60.0	54.6	–	113.4	102.1	92.8	–	160.3	120.8	89.6	–	66.7	60.0	54.6	–	113.4	102.1	92.8	–	160.3	144.3	122.4	–
	5'–6"	62.1	56.3	51.4	–	105.6	95.7	87.5	–	149.2	120.8	89.6	–	62.1	56.3	51.4	–	105.6	95.7	87.5	–	149.2	135.2	122.4	–
	6'–0"	60.0	54.6	50.0	–	102.1	92.8	85.0	–	144.3	120.8	89.6	–	60.0	54.6	50.0	–	102.1	92.8	85.0	–	144.3	131.1	120.2	–

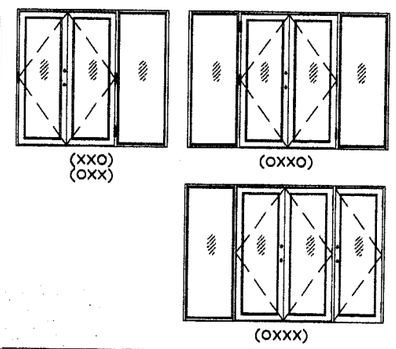

(XXO)
(OXX)

(OXXO)

(OXXX)

CHARTS 1&2 SHOWS SINGLE AND DUAL LEAF DOOR CAPACITIES WITH HIGH RISE SILL.

* FOR STD. SILL HEIGHTS LIMIT EXTERIOR LOADS TO +53.3 PSF.

CHARTS 3&4 SHOWS MAXIMUM LOAD CAPACITY FOR GIVEN SIDELITE WIDTHS.

FOR DOORS WITH SIDELITES LIMIT DESIGN LOADS TO LOWER VALUES OF CHARTS 1 OR 2 AND CHARTS 3 OR 4.

Engr: DR. HUMAYOUN FAROOQ
STRUCTURES
FLA. PE # 16557
C.A.N. 3538

JUN 27 2003

Approved as complying with the Florida Building Code
Date AUG. 14, 2003
NOA# 03-0630.07
Miami Dade Product Control Division
By Manuel Perez

AL–FAROOQ CORPORATION
ENGINEERS, PLANNERS & PRODUCT DESIGN
1235 SW 87 AVE
MIAMI, FLORIDA 33174
TEL. (305) 264–8100 FAX. (305) 262–6978
COMP–ANL\W03–45TMW

SERIES–249 ALUM OUT–SWING DOOR W/ SIDELITES (N.I.)

TM WINDOW AND DOOR
601 N.W. 12TH AVE.
POMPANO BEACH, FL. 33069
TEL. (954) 781–4430 FAX. (954) 781–5078

revisions:

no	date	by	description

date: 06–20–03
scale: 3/8" = 1"
dr. by: HAMID
chk. by:

drawing no.
W03–45

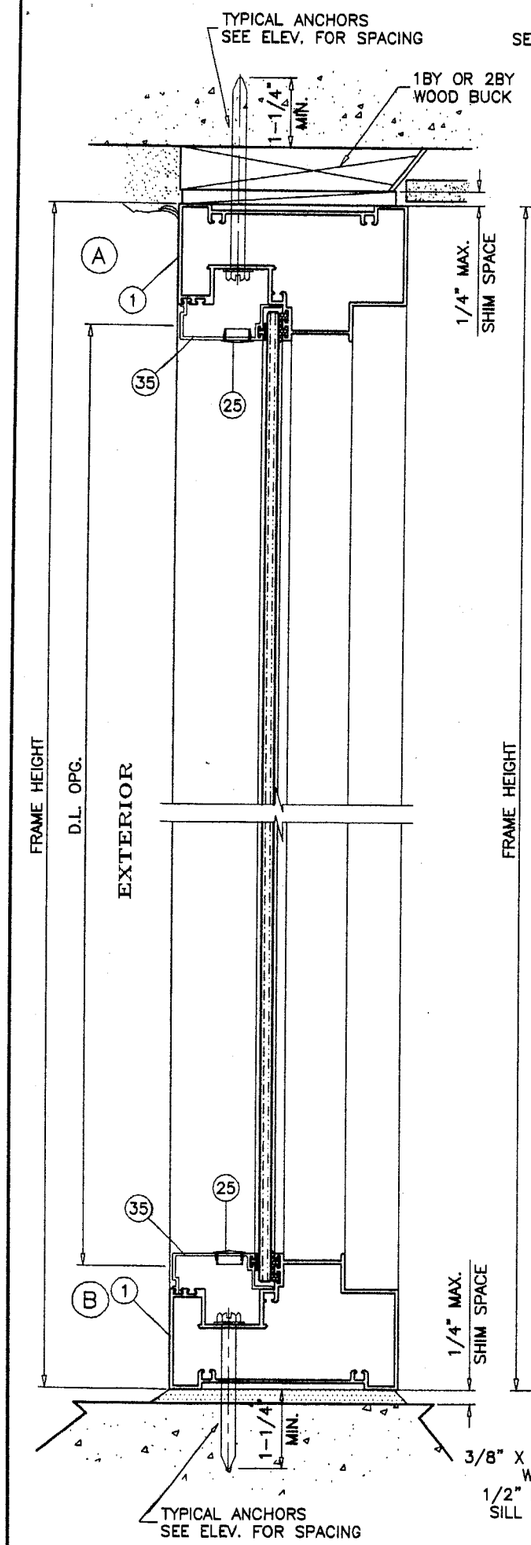

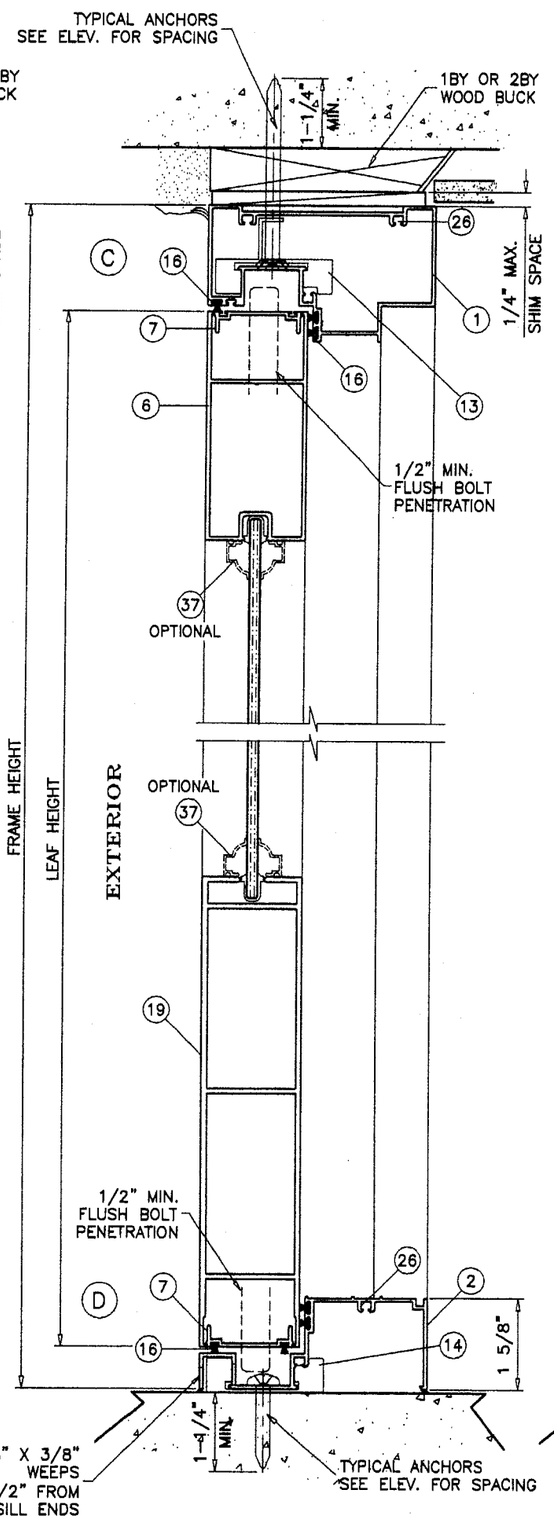

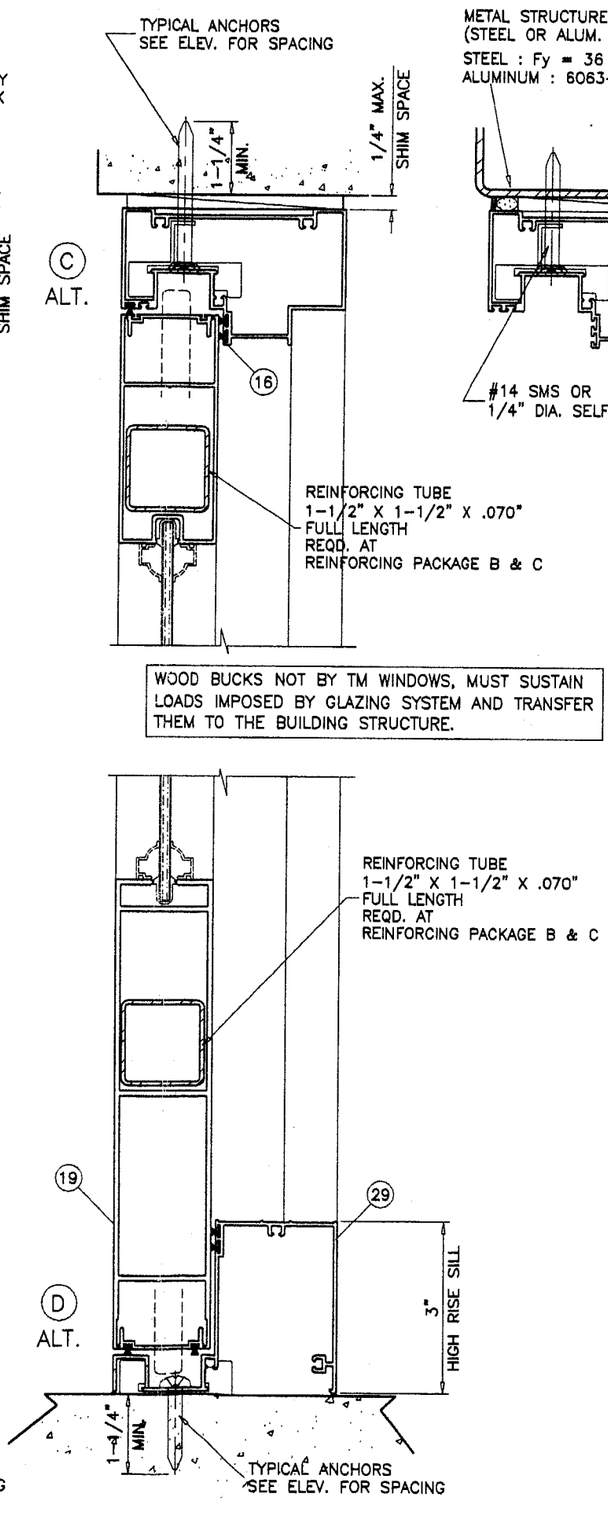

WOOD BUCKS NOT BY TM WINDOWS, MUST SUSTAIN LOADS IMPOSED BY GLAZING SYSTEM AND TRANSFER THEM TO THE BUILDING STRUCTURE.

OPTIONAL HI-RISE SILL

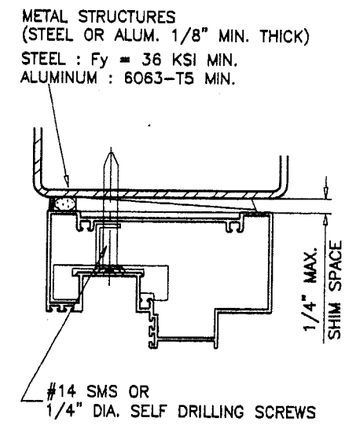

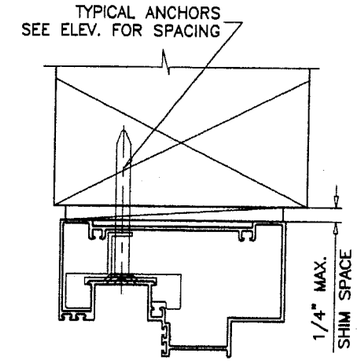

TYPICAL ANCHORS: SEE ELEV. FOR SPACING

1/4" DIA TAPCONS

INTO WOOD BUCKS OR WOOD STRUCTURES
1-3/4" MIN. PENETRATION INTO WOOD

THRU 1BY OR 2BY WOOD BUCKS INTO MASONRY OR CONC.
1-1/4" MIN. EMBED INTO MASONRY OR CONC.

DIRECTLY INTO MASONRY OR CONC.
1-1/4" MIN. EMBED INTO MASONRY OR CONC.

1/4" SELF DRILLING SCREWS (DRILLFLEX OR EQUIV.)

INTO METAL STRUCTURES
(STEEL OR ALUMINUM 1/8" MIN. THICK.)

STEEL : Fy = 36 KSI MIN.
ALUMINUM : 6063-T5 MIN.

SEALANTS:

FRAME CORNERS AND GLAZING BEAD TO PANEL SEALED WITH WHITE COLORED SEALANT.
SEAMS BETWEEN MULLION AND JAMBS SEALED WITH SILICONE.

HINGES:

7-5/8" LONG ALUM BUTT HINGES
2 PER LEAF FOR REINF. 'N' & 'A', AT 8" FROM EACH END
3 PER LEAF FOR REINF. 'B' & 'C', AT 4-1/2" FROM EACH END AND AT MIDSPAN.

LOCKS:

STANDARD STEEL THROW BOLT LOCK, KEY OPERATED ON EXTERIOR AND THUMB TURN ON INTERIOR
AT EACH ACTIVE LEAF LOCK STILE, 47-3/4" FROM BOTTOM

CONVENTIONAL LOCKSET WITH KNOB, KEY OPERATED ON EXTERIOR AND THUMB TURN ON INTERIOR
AT EACH ACTIVE LEAF LOCK STILE, 39-1/2" FROM BOTTOM

MANUALLY OPERATED CONCEALED FLUSH BOLTS
AT TOP & BOTTOM OF EACH LEAF LOCK STILE

(FLUSH BOLTS AT TOP & BOTTOM OF ACTIVE AND INACTIVE LEAFS TO BE ENGAGED DURING PERIODS OF HURRICANE WARNING)

Engr: DR. HUMAYOUN FAROOQ
STRUCTURES
FLA. PE # 16557
C.A.N. 3538

JUN 27 2003

Approved as complying with the Florida Buiding Code
Date AUG. 14 2003
NOA# 03-0630.07
Miami Dade Product Control Division
By

AL-FAROOQ CORPORATION
ENGINEERS, PLANNERS & PRODUCT DESIGN
1235 SW 87 AVE
MIAMI, FLORIDA 33174
TEL. (305) 264-8100 FAX. (305) 262-6978
COMP-ANL\W03-45TMW

SERIES-249 ALUM OUT-SWING DOOR W/ SIDELITES (N.L.)

TM WINDOW AND DOOR
601 N.W. 12TH AVE.
POMPANO BEACH, FL. 33069
TEL. (954) 781-5078 FAX. (954) 781-4430

revisions:

no	date	by	description

date: 06-20-03
scale: 3/8" = 1"
dr. by: HAMID
chk. by:

drawing no.
W03-45

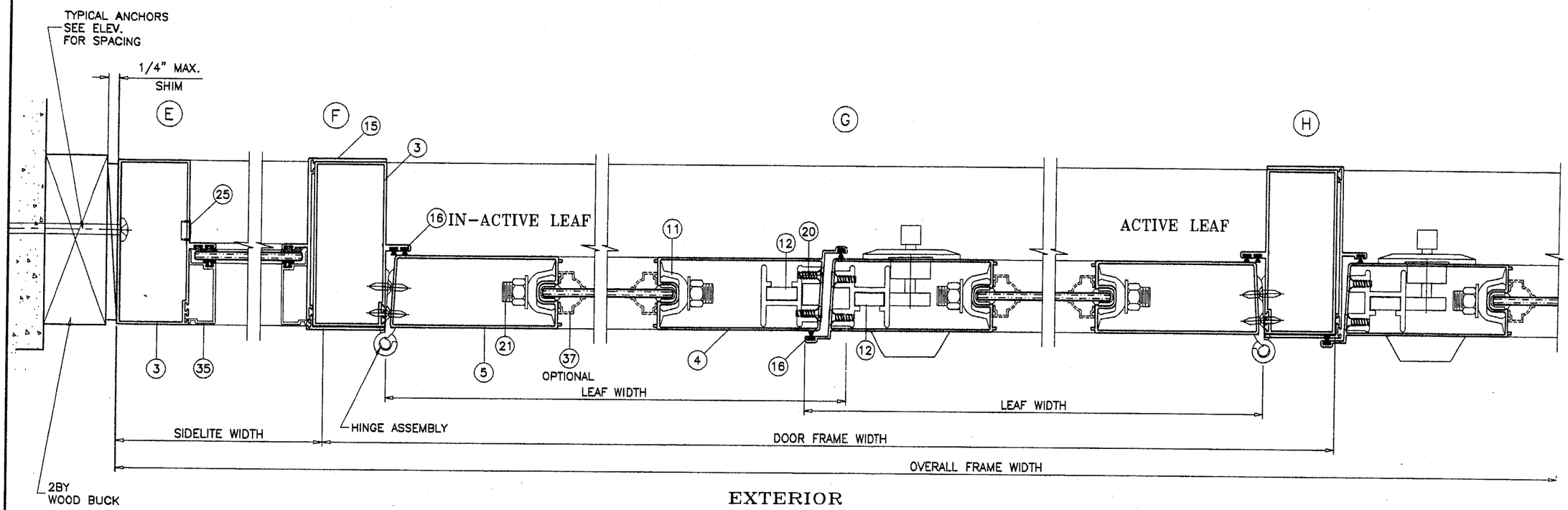

EXTERIOR

REINFORCING PACKAGE 'N'

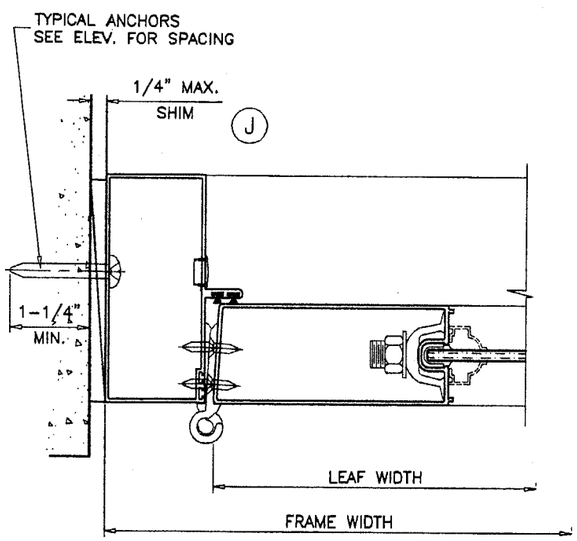

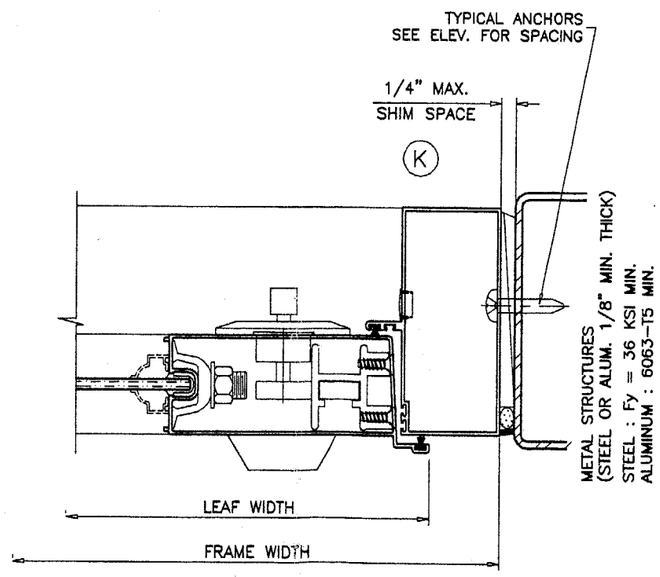

Engr: DR. HUMAYOUN FAROOQ
STRUCTURES
FLA. PE # 16557
C.A.N. 3538

JUN 27 2003

Approved as complying with the Florida Buiding Code
Date AUG. 14, 2003
NOA# 03-0630.07
Miami Dade Product Control Division
By Manuel Perez

AL-FAROOQ CORPORATION
ENGINEERS, PLANNERS & PRODUCT DESIGN
1235 SW 87 AVE
MIAMI, FLORIDA 33174
TEL. (305) 264-8100 FAX. (305) 262-6978

COMP-ANL\W03-45TMW

SERIES-249 ALUM OUT-SWING DOOR W/ SIDELITES (N.I.)

TM WINDOW AND DOOR
601 N.W. 12TH AVE.
POMPANO BEACH, FL. 33069
TEL. (954) 781-4430 FAX. (954) 781-5078

revisions:

no	date	by	description

date: 06-20-03
scale: 3/8" = 1"
dr. by: HAMID
chk. by:

drawing no.
W03-45

sheet 4 of 7

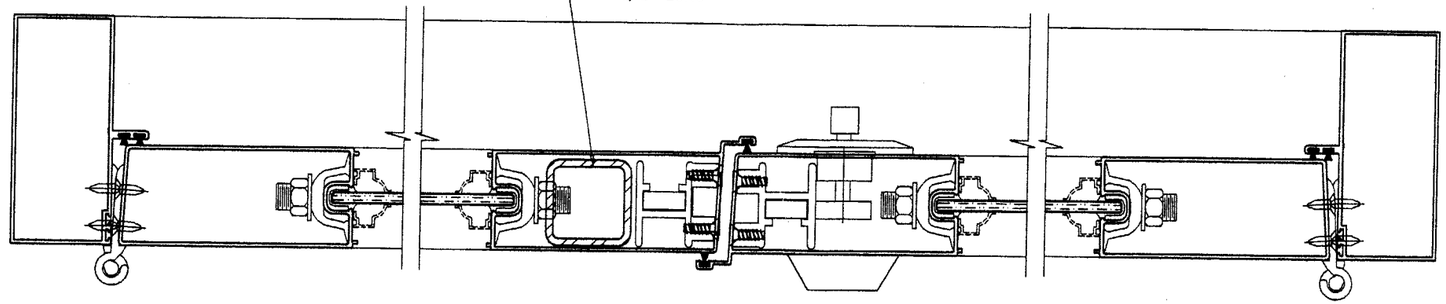

REINFORCING PACKAGE 'A'

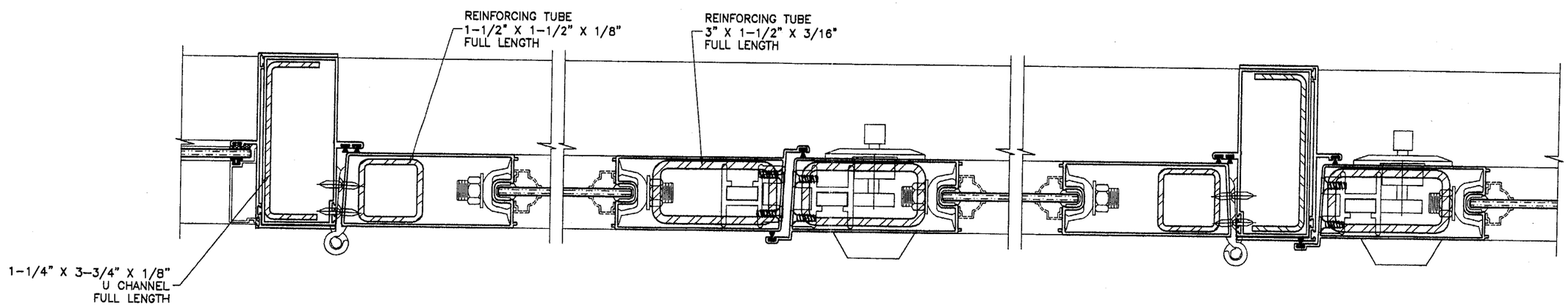

REINFORCING PACKAGE 'B'

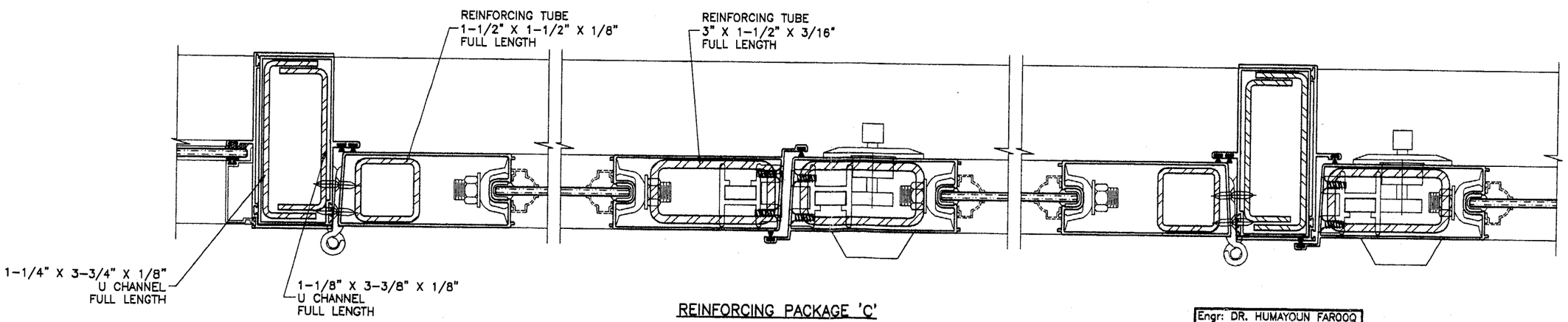

REINFORCING PACKAGE 'C'

Engr: DR. HUMAYOUN FAROOQ
STRUCTURES
FLA. PE # 16557
C.A.N. 3538
JUN 27 2003

Approved as complying with the Florida Buiding Code
Date AUG. 14, 2007
NOA# 03-0630.07
Miami Dade Product Control Division
By Manuel Perez

AL-FAROOQ CORPORATION
ENGINEERS, PLANNERS & PRODUCT DESIGN
1235 SW 87 AVE
MIAMI, FLORIDA 33174
TEL. (305) 264-8100 FAX. (305) 262-6978

COMP-ANL\W03-45TMW

SERIES-249 ALUM OUT-SWING DOOR W/ SIDELITES (N.I.)

TM WINDOW AND DOOR
601 N.W. 12TH AVE.
POMPANO BEACH, FL. 33069
TEL. (954) 781-4430 FAX. (954) 781-5078

revisions:

no	date	by	description

date: 06-20-03
scale: 3/8" = 1"
dr. by: HAMID
chk. by:

drawing no.
W03-45

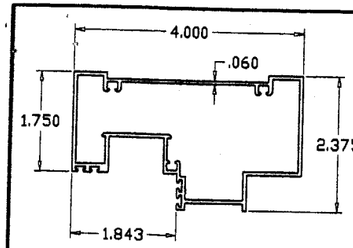

FRAME HEAD
TM-099

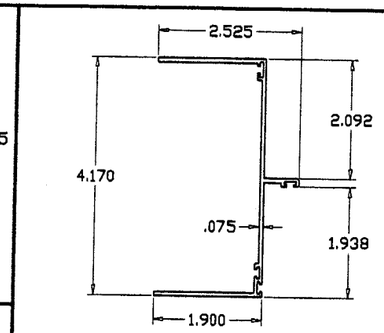

FRAME JAMB ADAPTER
GW 36986

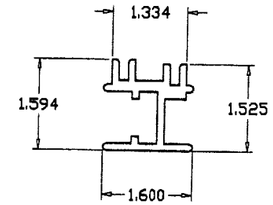

FLUSH BOLT GUIDE
GW-27646

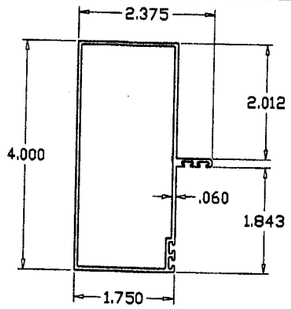

DOOR JAMB/SIDELITE FRAME
GW 37880

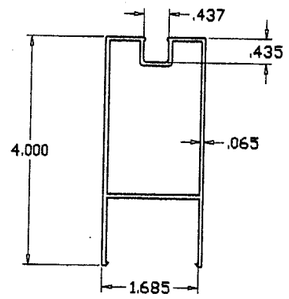

DOOR TOP RAIL
GW 32037

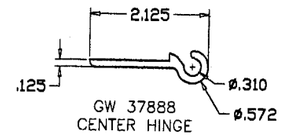

GW 37888
CENTER HINGE

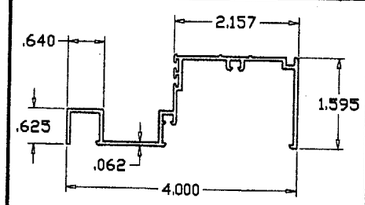

FRAME SILL
GW-28613

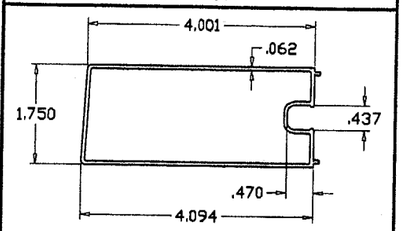

DOOR HINGE STILE
GW-31827

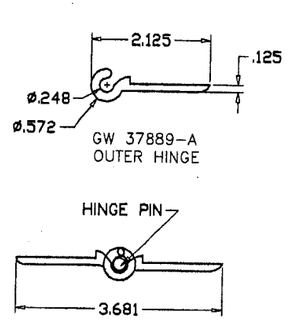

GW 37889-A
OUTER HINGE

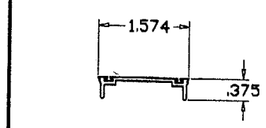

WEATHER-STRIP ADAPTER
GW-31826

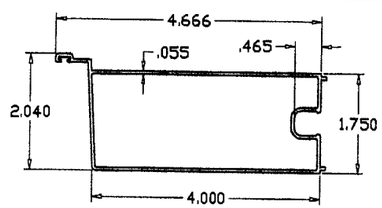

DOOR LEAF STILE
GW-34601

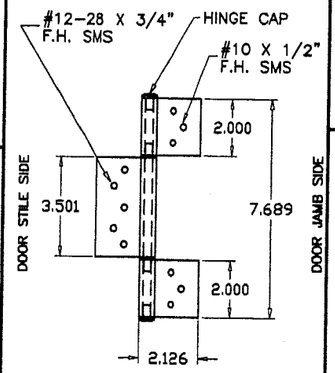

HINGE ASSEMBLY

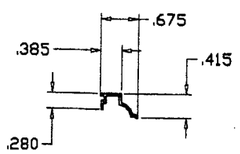

DECORATIVE MOULDING
GW-36737

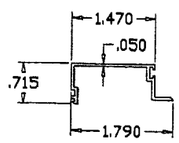

SIDELITE GLAZING BEAD
TM-044

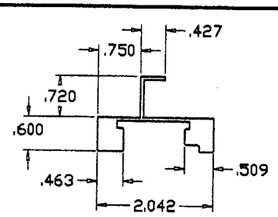

HEAD

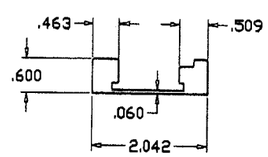

SILL

REINFORCING BAR
GW-37056

ITEM #	PART #	QUANTITY	DESCRIPTION	MATERIAL	MANF./SUPPLIER/REMARKS
1	TM-099	1	FRAME HEAD	6063-T6	–
2	GW 28613	1	FRAME SILL	6063-T6	–
2A	TM-094	1	ALT. FRAME SILL	6063-T6	–
3	GW 37880	2	FRAME JAMB	6063-T6	–
4	GW-34601	1	PANEL LOCK STILE	6063-T6	–
5	GW-31827	1	PANEL HINGE STILE	6063-T6	–
6	GW-32037	1	PANEL TOP RAIL	6063-T6	–
7	GW 31826	4	WEATHERSTRIP ADAPTER	6063-T6	END OF DOOR STILES (TOP/BOTTOM)
8	GW 37889A	2/HINGE ASSY.	TM OUTER BUTT HINGE	6063-T6	DOOR PANEL/FRAME HINGE SIDE
9	GW 33888	1/HINGE ASSY.	TM CENTER BUTT HINGE	6063-T6	DOOR PANEL/FRAME HINGE SIDE
10	GW 32222	2	DOOR LOCK INSERT	6063-T6	LOCK STILE
11	GW-34808	2/ LEAF	PRESSURE PLATE-TIE ROD	ALUMINUM	4" LONG
12	–	2/LEAF	TM FLUSH BOLT ASSEMBLY	ALUMINUM	DOOR LOCK STILES
13	GW-37056	AS REQD.	HEAD REINFORCING BAR, 12" LONG	6063-T6	AT MID SPAN
14	GW37056	AS REQD.	SILL REINFORCING BAR, 12" LONG	6063-T6	AT MID SPAN
15	GW 36986	AS REQD.	FRAME JAMB ADAPTER	6063-T6	–
16	4037	AS REQ'D.	"ULTRAFAB" CENTERFIN WOOLPILE	WOOL	LOCK STILES, JAMBS, HEAD, SILL
17	GW 27646	2/LEAF	FLUSHBOLT GUIDE	6063-T6	LOCK STILES ENDS (TOP/BOTTOM)
18	–	1/HINGE	7/32"ø HINGE PIN	STEEL	AT EACH HINGE ASSEMBLY
19	GW-29236	1	PANEL BOTTOM RAIL	6063-T6	–
20	–	AS REQD.	#10 x 1/2" F.H. UNDERCUT SMS.	STEEL	AT FLUSH BOLTS
21	–	2/LEAF	1/2"ø THREADED ROD, WASHER & NUT	STEEL	TOP/BOTTOM END RAILS
22	SERIES 400	1	KWIKSET KNOBLOCK AT REINF. 'N', 'A'&'B'	–	ACTIVE LEAF, 39-1/2" FROM BOTTOM
22A	SER 730	1	TITAN 730X26 DCP LOCKSET AT REINF. 'C'	–	ACTIVE LEAF, 39-1/2" FROM BOTTOM
23	SERIES 630	1	KWIKSET DEADBOLT AT REINF. 'N', 'A'&'B'	–	ACTIVE LEAF, 47-3/4" FROM BOTTOM
23A	SER 780	1	TITAN 780AX26 DCP DEAD BOLT AT REINF. 'C'	–	ACTIVE LEAF, 47-3/4" FROM BOTTOM
24	–	2/HINGE ASSY.	HINGE BUSHING	PLASTIC	HINGE ASSEMBLY
25	–	36	DUST PLUG (OPTIONAL)	PLASTIC	DOOR JAMB INSTALL. SCREW HOLES
26	–	AS REQD.	#10 x 1" P.H. SMS. (ASSY. SCREW)	STEEL	DOOR FRAME MEMBERS/MULL CLIPS
27	–	2/HINGE ASSY.	HINGE CAP	PLASTIC	HINGE ASSEMBLY
28	–	–	–	–	–
29	TM-094	1	HI-RISE SILL	6063-T6	–
30	–	–	–	–	–
35	TM-044	4	SIDELITE GLAZING BEAD	6063-T6	SIDE LITE GLAZING PERIMETER
37	GW 36737	OPTIONAL	O.G. DECORATIVE MOULDING	6063-T6	DOOR PANEL PERIMETER

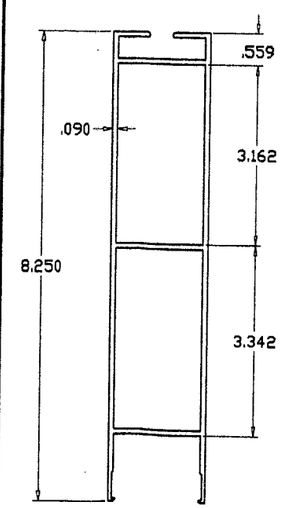

DOOR BOTTOM RAIL
GW 29236

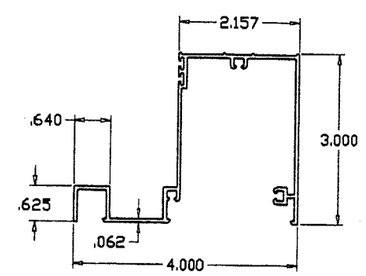

HI-RISE SILL
TM-094

Engr: DR. HUMAYOUN FAROOQ
STRUCTURES
FLA. PE # 16557
C.A.N. 3538

AUG 27 2003

Approved as complying with the Florida Building Code
Date AUG. 14. 2003
NOA# 03-0630.07
Miami Dade Product Control Division
By Manuel Diaz

AL-FAROOQ CORPORATION
ENGINEERS, PLANNERS & PRODUCT DESIGN
1235 SW 87 AVE
MIAMI, FLORIDA 33174
TEL. (305) 264-8100 FAX. (305) 262-6978
COMP-ANL\W03-45TMW

SERIES-249 ALUM OUT-SWING DOOR W/ SIDELITES (N.L.)

TM WINDOW AND DOOR
601 N.W. 12TH AVE.
POMPANO BEACH, FL. 33069
TEL (954) 781-4430 FAX. (954) 781-5078

revisions:

no	date	by	description

date: 06-20-03
scale: 3/8" = 1"
dr. by: HAMID
chk. by:

drawing no.
W03-45

sheet 6 of 7

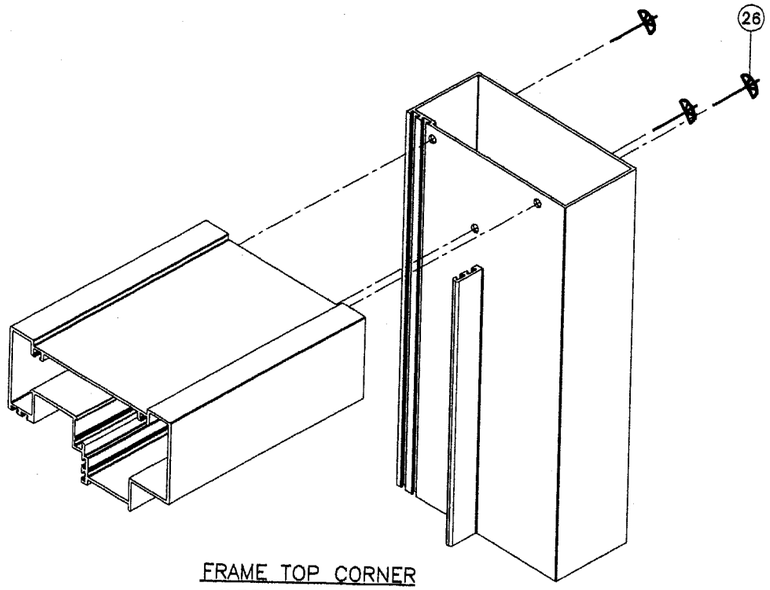

FRAME TOP CORNER
SIDELITE CORNER

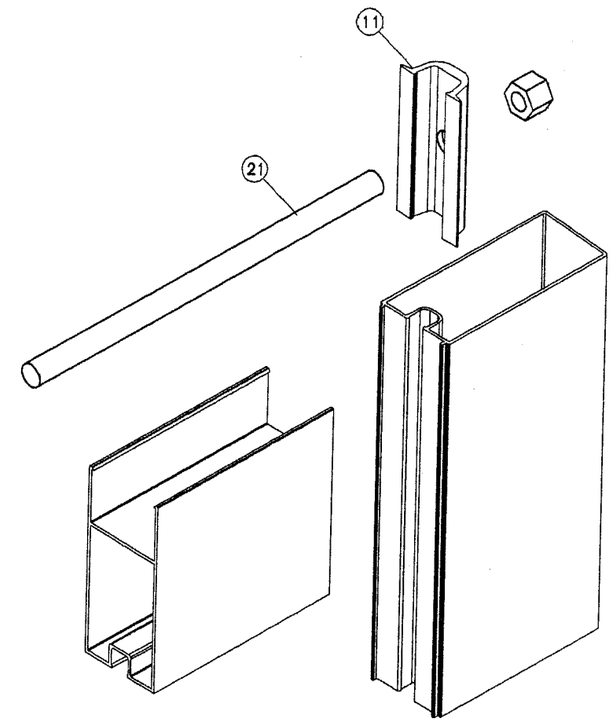

DOOR LEAF CORNER

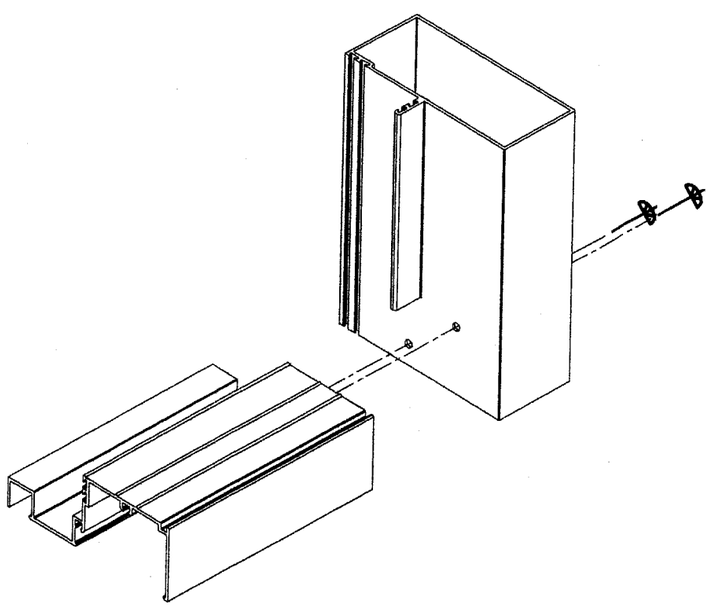

FRAME BOTTOM CORNER

Engr: DR. HUMAYOUN FAROOQ
STRUCTURES
FLA. PE # 16557
C.A.N. 3538

JUN 27 2003

Approved as complying with the Florida Buiding Code
Date AUG. 14 2003
NOA# 03-0630.07
Miami Dade Product Control Division
By Manuel Perez

AL-FAROOQ CORPORATION
ENGINEERS, PLANNERS & PRODUCT DESIGN
1235 SW 87 AVE
MIAMI, FLORIDA 33174
TEL. (305) 264-8100 FAX. (305) 262-6978
COMP-ANL\W03-45TMW

SERIES-249 ALUM OUT-SWING DOOR W/ SIDELITES (N.I.)

TM WINDOW AND DOOR
601 N.W. 12TH AVE.
POMPANO BEACH, FL. 33069
TEL. (954) 781-4430 FAX. (954) 781-5078

revisions:

no	date	by	description

date: 06-20-03
scale: 3/8" = 1"
dr. by: HAMID
chk. by:

drawing no.
W03-45

sheet 7 of 7