MIAMI-DADE

BUILDING CODE COMPLIANCE OFFICE (BCCO)
PRODUCT CONTROL DIVISION

MIAMI-DADE COUNTY, FLORIDA
METRO-DADE FLAGLER BUILDING
140 WEST FLAGLER STREET, SUITE 1603
MIAMI, FLORIDA 33130-1563
(305) 375-2901 FAX (305) 375-2908

NOTICE OF ACCEPTANCE (NOA)

Hurst Awning Co., Inc.
6865 NW 36 Ave.
Miami, FL 33147

SCOPE:

This NOA is being issued under the applicable rules and regulations governing the use of construction materials. The documentation submitted has been reviewed by Miami-Dade County Product Control Division and accepted by the Board of Rules and Appeals (BORA) to be used in Miami Dade County and other areas where allowed by the Authority Having Jurisdiction (AHJ).

This NOA shall not be valid after the expiration date stated below. The Miami-Dade County Product Control Division (In Miami Dade County) and/or the AHJ (in areas other than Miami Dade County) reserve the right to have this product or material tested for quality assurance purposes. If this product or material fails to perform in the accepted manner, the manufacturer will incur the expense of such testing and the AHJ may immediately revoke, modify, or suspend the use of such product or material within their jurisdiction. BORA reserves the right to revoke this acceptance, if it is determined by Miami-Dade County Product Control Division that this product or material fails to meet the requirements of the applicable building code.

This product is approved as described herein, and has been designed to comply with the High Velocity Hurricane Zone of the Florida Building Code.

DESCRIPTION: 0.063" Aluminum (5052 H32 Alloy) Storm Panels Shutter

APPROVAL DOCUMENT: Drawing No. 98-217, titled "0.063" Aluminum Storm Panel", sheets 1 through 8 of 8, prepared by Knezevich & Associates, Inc., dated September 30, 1998, last revision #3 dated May 9, 2002, signed and sealed by V. J. Knezevich, P.E., bearing the Miami-Dade County Product Control Renewal stamp with the Notice of Acceptance number and expiration date by the Miami-Dade County Product Control Division.

MISSILE IMPACT RATING: Large and Small Missile Impact

LABELING: Each panel shall bear a permanent label with the manufacturer's name or logo, city, state and the following statement: "Miami-Dade County Product Control Approved", unless otherwise noted herein.

RENEWAL of this NOA shall be considered after a renewal application has been filed and there has been no change in the applicable building code negatively affecting the performance of this product.

TERMINATION of this NOA will occur after the expiration date or if there has been a revision or change in the materials, use, and/or manufacture of the product or process. Misuse of this NOA as an endorsement of any product, for sales, advertising or any other purposes shall automatically terminate this NOA. Failure to comply with any section of this NOA shall be cause for termination and removal of NOA.

ADVERTISEMENT: The NOA number preceded by the words Miami-Dade County, Florida, and followed by the expiration date may be displayed in advertising literature. If any portion of the NOA is displayed, then it shall be done in its entirety.

INSPECTION: A copy of this entire NOA shall be provided to the user by the manufacturer or its distributors and shall be available for inspection at the job site at the request of the Building Official.

This NOA **renews NOA # 02-0315.08** and consists of this page 1 as well as approval document mentioned above. The submitted documentation was reviewed by **Helmy A. Makar, P.E.**

Helmy A. Makar
08/07/03

PRODUCT CONTROL ACCEPTED

NOA No 03-0701.01
Expiration Date: 07/10/ 2008
Approval Date: 08/07/ 2002
Page 1

GENERAL NOTES:

1. THESE APPROVAL DOCUMENTS REPRESENT A SHUTTER SYSTEM ANALYZED WITH THE PROVISION SET FOR THE ISSUANCE OF A NOTICE OF ACCEPTANCE (NOA) BY MIAMI-DADE COUNTY PRODUCT CONTROL DIVISION FOR THE HIGH VELOCITY HURRICANE ZONE (HVHZ) OF THE FLORIDA BUILDING CODE.
2. TO VERIFY THAT THE ANCHORS AS TESTED, ARE NOT OVERSTRESSED IN THESE APPROVAL DOCUMENTS, A 33% INCREASE IN ALLOWABLE STRESS WAS USED IN THE FASTENER ANALYSIS.
3. DETERMINE THE POSITIVE AND NEGATIVE DESIGN LOADS TO USE WHEN REFERENCING THESE DOCUMENTS IN ACCORDANCE WITH THE GOVERNING CODE AND GOVERNING WIND VELOCITY. FOR WIND LOAD CALCULATIONS IN ACCORDANCE WITH ASCE 7-98, A DIRECTIONALITY FACTOR OF Kd =1.0 SHALL BE USED.
4. THESE APPROVAL DOCUMENTS ARE GENERIC AND DO NOT INCLUDE INFORMATION FOR SITE-SPECIFIC APPLICATION OF THIS SHUTTER SYSTEM.
5. THESE APPROVAL DOCUMENTS COMPLY WITH CHAPTER 61G15-23 OF THE FLORIDA ADMINISTRATIVE CODE.
6. THESE APPROVAL DOCUMENTS, ARE SUITABLE TO BE APPLIED BY THE CONTRACTOR PROVIDED THE CONTRACTOR DOES NOT DEVIATE FROM THE CONDITIONS DETAILED HEREIN AND THE CONTRACTOR VERIFIES THAT THE EXISTING STRUCTURE DOES NOT DEVIATE IN EITHER FORM OR MATERIAL FROM THE STRUCTURAL SUBSTRATES DETAILED HEREIN.
7. ANY MODIFICATIONS OR ADDITIONS TO THESE APPROVAL DOCUMENTS WILL VOID THE APPROVAL DOCUMENTS.
8. WHEN THE SITE CONDITIONS DEVIATE FROM THESE APPROVAL DOCUMENTS, THE BUILDING OFFICIAL MAY ELECT ONE OF THE FOLLOWING OPTIONS:
   A) REQUIRE THAT SITE SPECIFIC DOCUMENTS BE PREPARED, SIGNED, DATED AND SEALED BY A LICENSED ENGINEER OR REGISTERED ARCHITECT, WHICH DETAIL AND JUSTIFY THE DEVIATION. SAID DOCUMENTS SHALL BE SUBMITTED TO THE PRODUCT ENGINEER FOR REVIEW AS A CONDITION TO THE BUILDING OFFICIAL GRANTING HIS/HER APPROVAL.
   B) REQUIRE THAT A ONE-TIME SITE SPECIFIC APPROVAL BE APPLIED FOR AND SECURED FROM THE MIAMI-DADE COUNTY PRODUCT CONTROL DIVISION

   WHEN THE SITE CONDITION DEVIATIONS OCCUR WITHIN THE HIGH VELOCITY HURRICANE ZONE AREAS ONLY OPTION "B" SHALL BE ACCEPTED BY THE BUILDING OFFICIAL.
9. PRODUCT MARKINGS SHALL BE WITHIN 12" OF ONE END OF THE PANEL WITH A MINIMUM OF ONE MARKING PER PANEL AND SHALL BE PERMANENTLY LABELED AS FOLLOWS:

   HURST AWNING CO., INC.
   MIAMI, FLORIDA
   MIAMI-DADE COUNTY PRODUCT CONTROL APPROVED
10. ALL BOLTS AND WASHERS SHALL BE GALVANIZED OR STAINLESS STEEL WITH A MINIMUM TENSILE STRENGTH OF 60 KSI.
11. STORM PANELS SHALL BE 5052-H32 ALUMINUM ALLOY, WITH THE FOLLOWING BARE METAL THICKNESS AND MECHANICAL PROPERTIES:

    0.063" MIN. BARE METAL THICKNESS, WITH A MIN. Fy= 25.0 KSI
12. ALL EXTRUSIONS SHALL BE 6063-T6 ALUMINUM ALLOY, U.O.N
13. TYPE I & TYPE II PANELS, OPTIONAL 1" x 1" x 16 GA STEEL BAR MAY BE USED TO CONTROL DEFLECTION OF STORM PANEL SYSTEM ON INSTALLATIONS BELOW 30' ABOVE THE GRADE, PROVIDED THAT THE PANEL SPANS USED ARE 101" OR LESS, THAT DESIGN LOADS AREBELOW ±72 PSF AND THAT THE SEPARATION FROM GLASS IS 1-7/8" OR MORE BUT LESS THAN 2.5".
14. TYPE I & II PANELS SHALL BE FASTENED AT PANEL OVERLAPS AT MIDSPAN WITH 1/4-20 x 1" BOLTS W/ DIE CAST ALUM. WASHERED WINGNUTS OR JACKNUTS (SEE TYPICAL ELEVATION). FOR TYPE I OR II PANEL SPANS LESS THAN 33" OVERLAP FASTENERS & TUBULAR BAR ARE NOT REQUIRED NO STEEL BAR OR OVERLAP FASTENERS ARE REQUIRED FOR INSTALLATION TYPE III. (SEE TYPICAL ELEVATION TYPE III). TYPE I & II PANELS UTILIZING A STEEL BAR SHALL BE FASTENED AT OVERLAPS AT MIDSPAN TO A 1" x 1" x 16 GAGE STEEL BAR USING 1/4-20 x 3-1/2" BOLTS W/ DIE CAST ALUM. WASHERED WINGNUTS OR JACKNUTS, (SEE TYP. ELEVATION).
15. TOP & BOTTOM DETAILS SHOWN MAY BE INTERCHANGED AS FIELD CONDITIONS DICTATE. PANELS MAY BE MOUNTED HORIZONTALLY WHERE APPLICABLE, EXCEPT FOR "h" AND "U" HEADER MOUNTING CONDITIONS.
16. AT LEAST ONE WARNING NOTE PER OPENING SHALL BE PLACED IN A CONSPICUOUS LOCATION ON ANY OF THE COMPONENTS OF THE STORM PANEL SYSTEM ADVISING THE HOME OWNER OR TENANT THAT THE STORM PANELS WILL NOT OFFER HURRICANE PROTECTION UNLESS ALL REINFORCING BOLTS AND TUBE ARE PROPERLY INSTALLED WHEN REQUIRED. WARNING LABEL SHALL BE FASTENED WITH PERMANENT ADHESIVE OR MECHANICALLY. ADDITIONAL WARNING LABEL SHALL BE PLACED WHEN SPRING LOCKING CLIPS ARE USED STATING THAT TWO SPRING LOCKING CLIPS ARE REQUIRED PER HOLE.
17. WHEN PANEL (1a) IS USED, 6-1/4" AND 12-1/2" O.C. SHALL BE USED IN ALL DETAILS IN THESE DRAWINGS IN LIEU OF 6" AND 12" BUT FASTENER SPACING SHALL NOT EXCEED THAT SHOWN IN ANCHOR SCHEDULE ON PAGES 6, 7 & 8 OF 8.

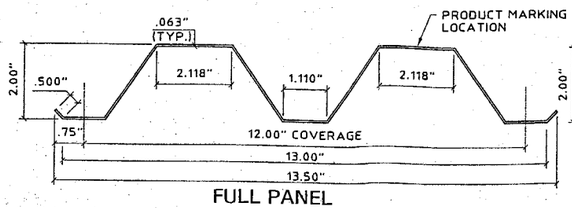

FULL PANEL

(1) STORM PANEL
SCALE : 3" = 1'-0"

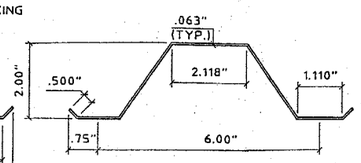

HALF PANEL

ONE HALF PANEL PER OPENING MAY BE USED AS REQUIRED TO COMPLETE OPENING

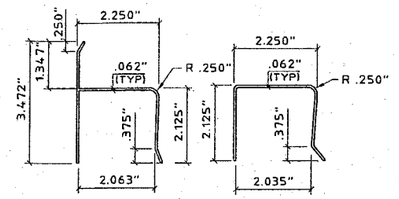

(2) "h" HEADER
SCALE : 3" = 1'-0"

(3) "U" HEADER
SCALE : 3" = 1'-0"

PRODUCT RENEWED
as complying with the Florida Building Code
Acceptance No. 03-0701.01
Expiration Date 07/10/2008
By Helmy A. Nelson
Miami Dade Product Control Division

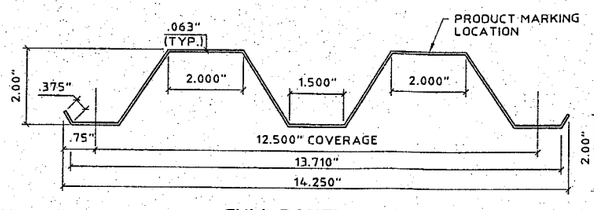

FULL PANEL

(1a) STORM PANEL
SCALE : 3" = 1'-0"
SEE GENERAL NOTE #17 ON SHEET 1 OF 8.

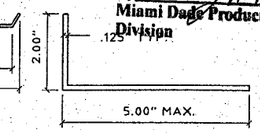

(4) ANGLE
SCALE : 3" = 1'-0"

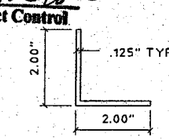

(5) ANGLE
SCALE : 3" = 1'-0"

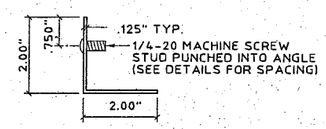

(6) STUDDED ANGLE
SCALE : 3" = 1'-0"

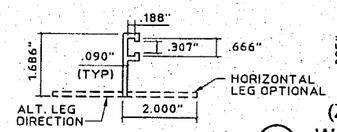

(7) OPTIONAL ANGLE
SCALE : 3" = 1'-0"

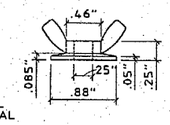

(8) (ZAMAC 3 ALLOY) WASHERED WINGNUT
SCALE : HALF SIZE

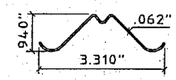

(9) (TWO PER HOLE) SPRING LOCKING CLIP (1" WIDE)
SCALE : 3" = 1'-0"

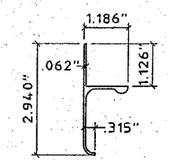

(10) SILL TRACK (W/ 1/4" x 1-5/8" SLOT AT 6" O.C.)
SCALE : 3" = 1'-0"

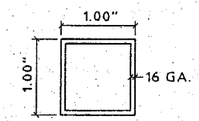

(11) STEEL BAR
HALF SIZE

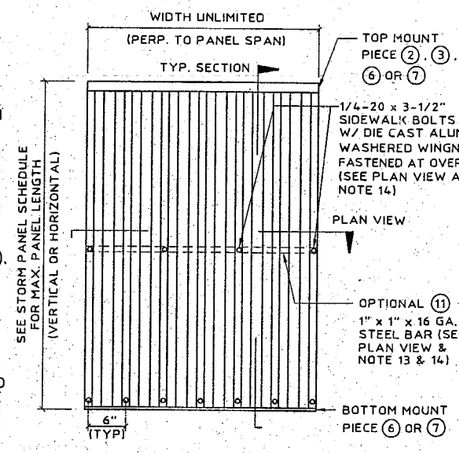

TYPICAL ELEVATION-TYPE I

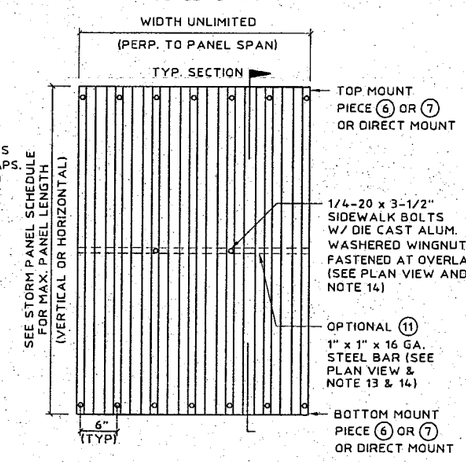

TYPICAL ELEVATION-TYPE II

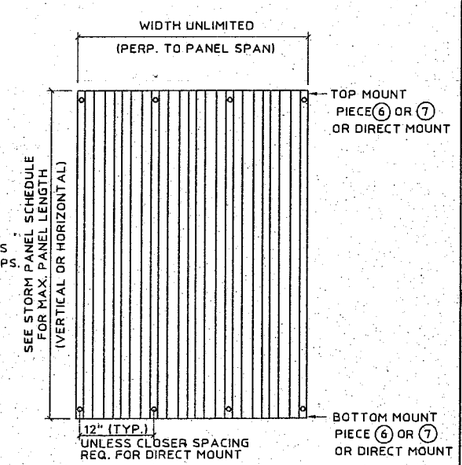

TYPICAL ELEVATION-TYPE III

(NO BOLTS AT PANEL OVERLAPS OR BAR ARE REQUIRED)

NOTE: IF BAR (11) IS NOT USED, TABLE 2 "NO BAR W/ BOLTS" IS APPLICABLE FOR SEPARATION FROM GLASS
IF BAR (11) IS USED, TABLE 2 "BAR W/ BOLTS" IS APPLICABLE FOR SEPARATION FROM GLASS.

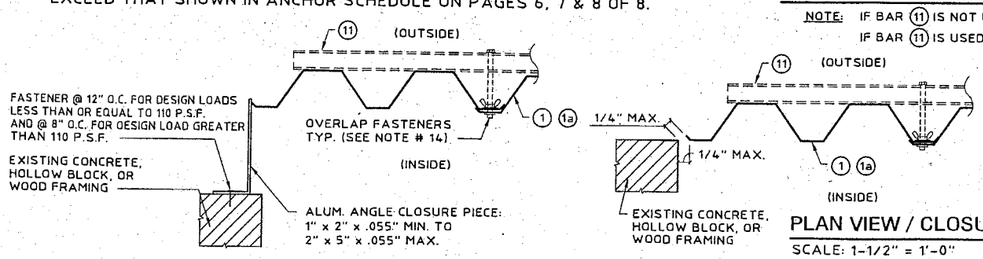

PLAN VIEW / CLOSURE DETAILS
SCALE: 1-1/2" = 1'-0"

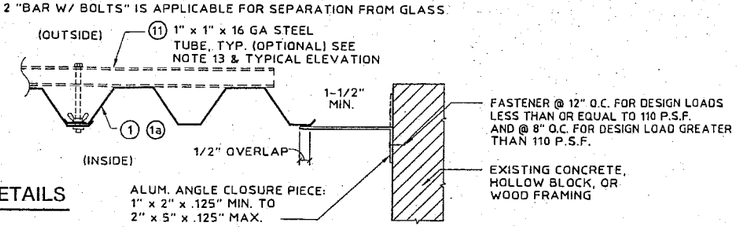

PRODUCT REVISED
as complying with the Florida Building Code
Acceptance No. 02-0315.08
Expiration Date 07/10/03
By
Miami Dade Product Control Division

KNEZEVICH & ASSOCIATES, INC.
CONSULTING ENGINEERS • PRODUCT TESTING
1260 N. UNIVERSITY DRIVE, SUITE 180 • FORT LAUDERDALE, FL 33322
TEL: (954) 382-2800 • FAX: (954) 382-2989 • FLORIDA COA #3205
WEBSITE: WWW.KNEZEVICH.COM • E-MAIL: KA@KNEZEVICH.COM

COPYRIGHT © 2002 KNEZEVICH & ASSOCIATES, INC.

0.063" ALUMINUM STORM PANEL

HURST AWNING COMPANY, INC. "QUALITY SERVICE SINCE 1957"
Manufacturers of Hurricane & Security Protection Products
6865 N.W. 36th Avenue
Miami, Florida 33147
Phone: (305) 635-0900
Toll Free: (800) 327-0905
Fax: (305) 634-9078

V.J. KNEZEVICH
PROFESSIONAL ENGINEER
FL License No: PE 0010983

MAY 1 0 2002

revisions			
no	date	by	description
1	09/30/98	VJK	PREV. DRAWING # 95-330
2	01/04/98	VJK	GENERAL REVISIONS
3	05/09/02	DLB	GENERAL NOTES

date 09/30/1998	
scale AS NOTED	drawn by MC
design by VJK	checked by VJK
drawing no. 98-217	
sheet 1 of 8	

Print Information: J:\CADD\Cadd98\Hurst\98-217\R3-sub\98-217-01.dwg AVazquez 05/09/2002 02:05:18pm
05/09/02 14:05

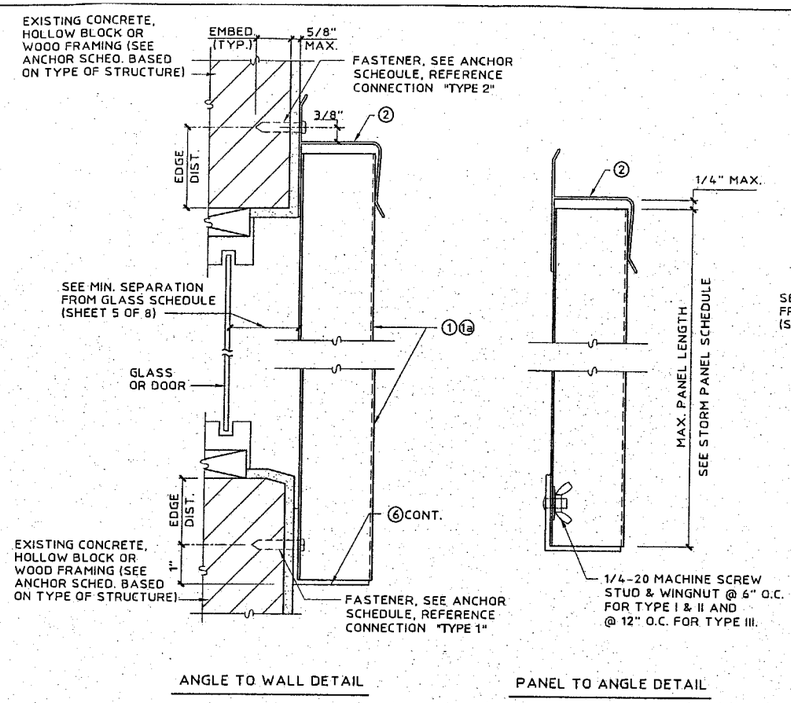

Ⓐ WALL MOUNT SECTION

SCALE : 3" = 1'-0"

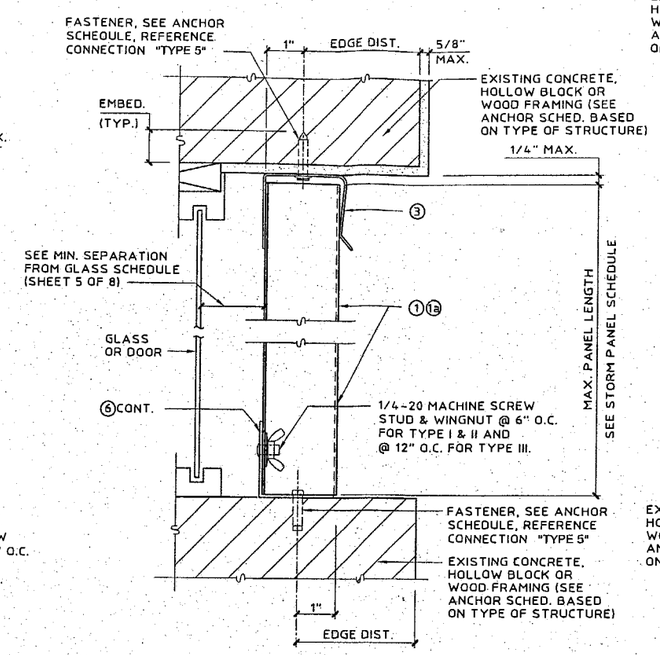

Ⓑ CEILING/INSIDE MOUNT SECTION

SCALE : 3" = 1'-0"

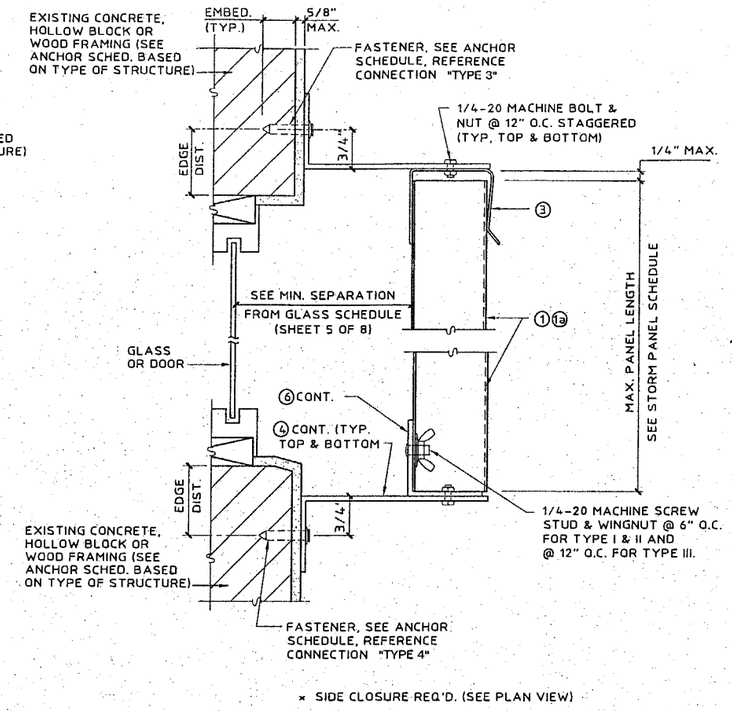

Ⓒ BUILD-OUT MOUNT SECTION

SCALE : 3" = 1'-0"

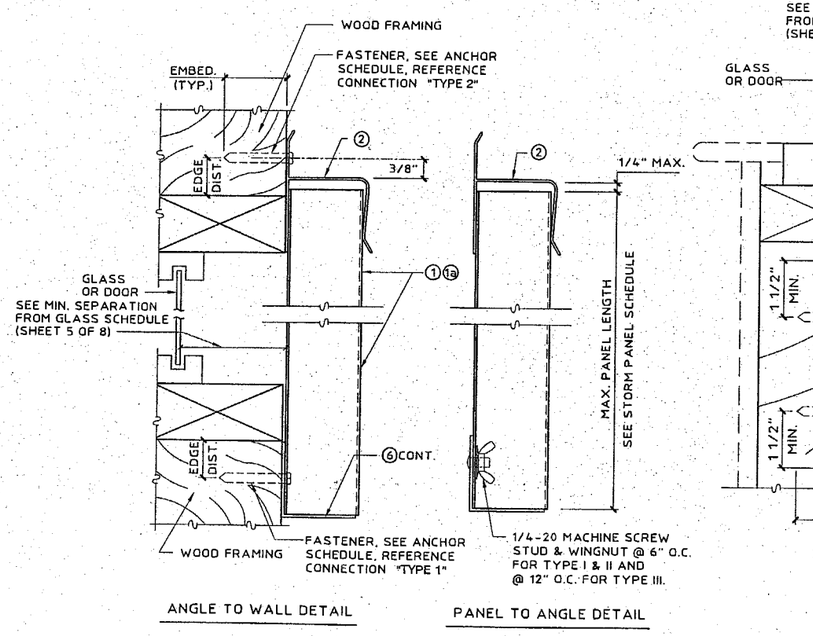

Ⓓ WALL MOUNT SECTION

SCALE : 3" = 1'-0"

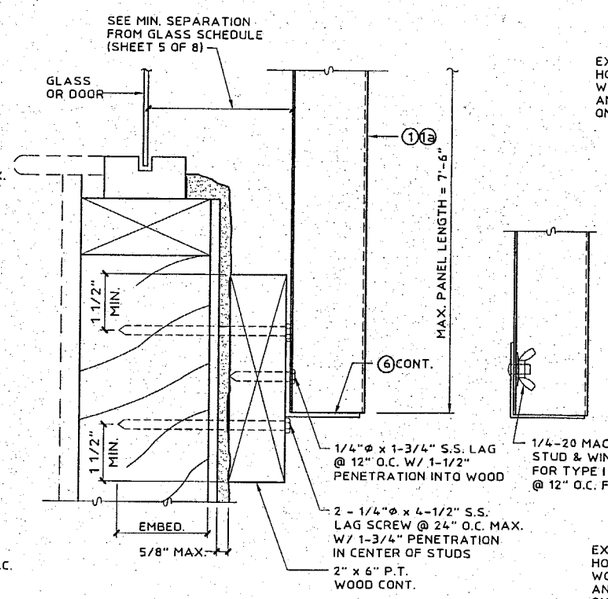

NOTE: THIS DETAIL MAY BE USED AT TOP OR BOTTOM OF PANELS.

NOTE: USE OF THIS DETAIL IS LIMITED TO ± 72 PSF.

Ⓔ WALL MOUNT SECTION

SCALE : 3" = 1'-0"

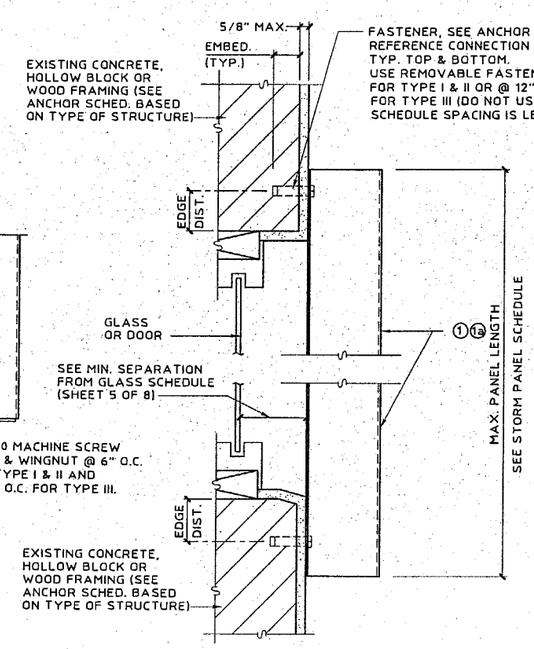

Ⓕ WALL MOUNT SECTION

(DIRECT MOUNT)

SCALE : 3" = 1'-0"

PRODUCT RENEWED
as complying with the Florida Building Code
Acceptance No 03-0701.01
Expiration Date 07/10/2008
By Helmy A. Mohsen
Miami Dade Product Control Division

PRODUCT REVISED
as complying with the Florida Building Code
Acceptance No 02-0315.08
Expiration Date 07/10/03
By
Miami Dade Product Control Division

KNEZEVICH & ASSOCIATES, INC.
CONSULTING ENGINEERS • PRODUCT TESTING
1260 N. UNIVERSITY DRIVE, SUITE 180 • FORT LAUDERDALE, FL 33322
TEL: (954) 382-2800 • FAX: (954) 382-2989 • FLORIDA COA #3205
WEBSITE: WWW.KNEZEVICH.COM • E-MAIL: KA@KNEZEVICH.COM

COPYRIGHT © 2002 KNEZEVICH & ASSOCIATES, INC.

0.063" ALUMINUM STORM PANEL

Manufacturers of Hurricane & Security Protection Products
HURST AWNING COMPANY, INC. "QUALITY SERVICE SINCE 1957"
6865 N.W. 36th Avenue
Miami, Florida 33147
Phone: (305) 635-0900
Toll Free: (800) 327-0905
Fax: (305) 634-9078

V.J. KNEZEVICH
PROFESSIONAL ENGINEER
FL License No: PE 0010983

MAY 1 0 2002

revisions

no	date	by	description
1	09/30/98	VJK	PREV. DRAWING # 95-330
2	01/04/98	VJK	GENERAL REVISIONS
3	05/09/02	DLB	GENERAL NOTES

date 09/30/1998
scale AS NOTED
drawn by MC
design by VJK
checked by VJK
drawing no. 98-217
sheet 2 of 8

Print Information: J:\CADD\Cadd98\Hurst\98-217\R3-sub\98-217-02.dwg AVazquez 05/09/2002 02:56:12pm

05/09/02 14:05

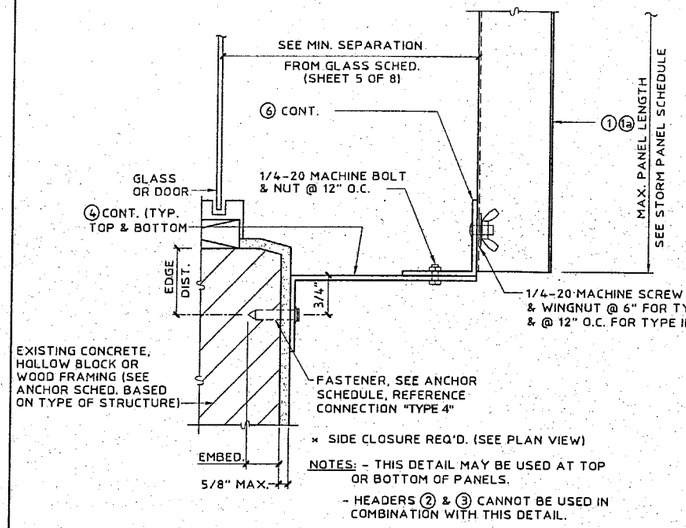

× SIDE CLOSURE REQ'D. (SEE PLAN VIEW)

NOTES: - THIS DETAIL MAY BE USED AT TOP OR BOTTOM OF PANELS.

- HEADERS ② & ③ CANNOT BE USED IN COMBINATION WITH THIS DETAIL.

Ⓖ ALT. BUILD-OUT MOUNT SECTION

SCALE : 3" = 1'-0"

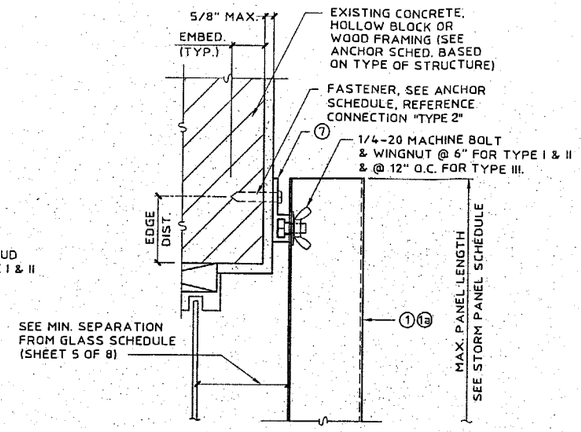

NOTE: THIS DETAIL MAY BE USED AT TOP OR BOTTOM OF PANELS.

Ⓗ WALL MOUNT DETAIL

SCALE : 3" = 1'-0"

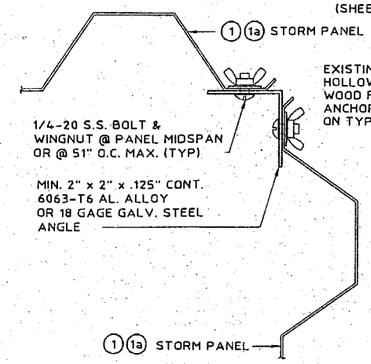

Ⓘ CORNER DETAIL

SCALE : 3" = 1'-0"

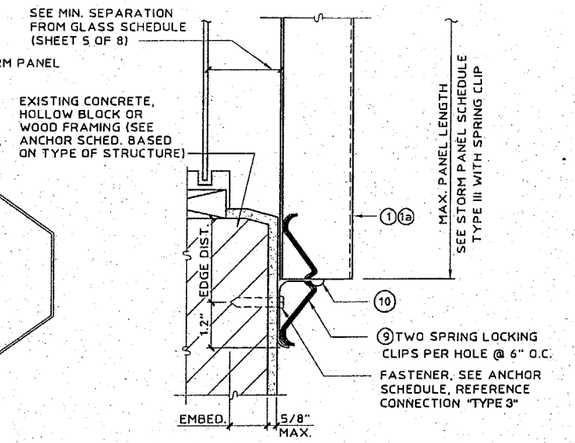

Ⓙ ALT. WALL MOUNT W/ SPRING CLIP (SILL ONLY)

SCALE: 3" = 1'-0"

NOTE: PANEL LENGTH SHALL BE LIMITED TO TABLE 1 TYPE III

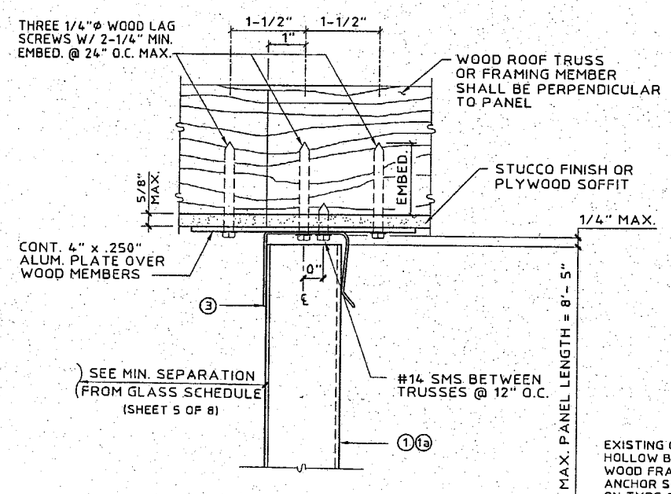

(MAX. DESIGN LOAD ± 72 PSF)

Ⓚ SOFFIT CONNECTION DETAIL

SCALE : 3" = 1'-0"

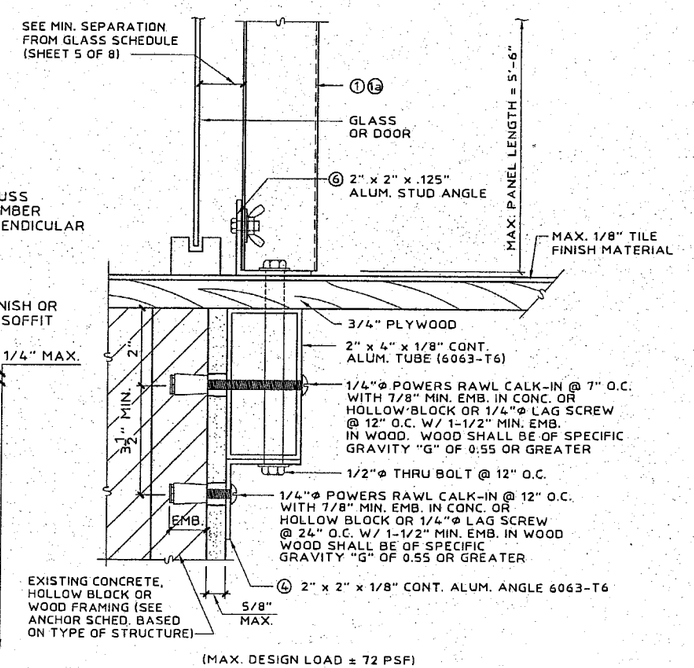

(MAX. DESIGN LOAD ± 72 PSF)

Ⓝ "PASS THRU" DETAIL

SCALE : 3" = 1'-0"

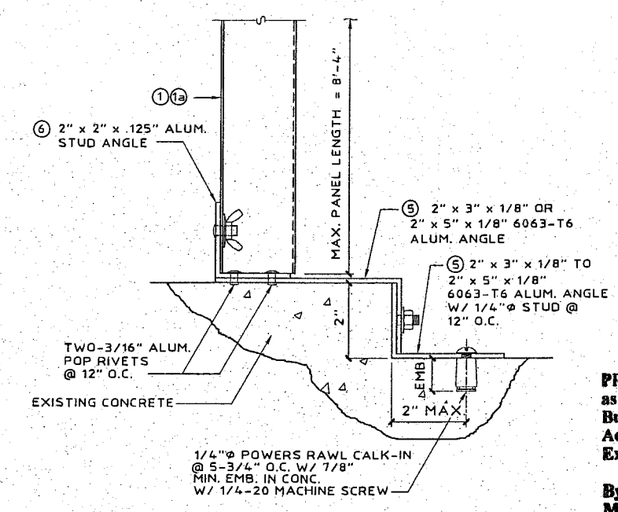

NOTE: THIS DETAIL MAY BE USED AT TOP OR BOTTOM OF PANEL.

(MAX. DESIGN LOAD ± 72 PSF)

Ⓞ EDGE MOUNT DETAIL

SCALE : 3" = 1'-0"

PRODUCT RENEWED
as complying with the Florida Buiding Code
Acceptance No 03-0701.01
Expiration Date 07/10/2008
By Helmy A. Hakim
Miami Dade Product Control Division

PRODUCT REVISED
as complying with the Florida Buiding Code
Acceptance No 02-0315.08
Expiration Date 07/10/03
By
Miami Dade Product Control Division

KNEZEVICH & ASSOCIATES, INC.
CONSULTING ENGINEERS • PRODUCT TESTING
1260 N. UNIVERSITY DRIVE, SUITE 180 • FORT LAUDERDALE, FL 33322
TEL: (954) 382-2800 • FAX: (954) 382-2989 • FLORIDA COA #3205
WEBSITE: WWW.KNEZEVICH.COM • E-MAIL: KA@KNEZEVICH.COM

COPYRIGHT © 2002 KNEZEVICH & ASSOCIATES, INC

0.063" ALUMINUM STORM PANEL

HURST AWNING COMPANY, INC. QUALITY SERVICE SINCE 1937
Manufacturers of Hurricane & Security Protection Products
6865 N.W. 36th Avenue
Miami, Florida 33147
Phone: (305) 635-0900
Toll Free: (800) 327-0905
Fax: (305) 634-9078

V.J. KNEZEVICH
PROFESSIONAL ENGINEER
Fl. License No: PE0010983

MAY 1 0 2002

revisions			
no	date	by	description
1	05/30/98	VJK	PREV. DRAWING # 95-330
2	07/04/98	VJK	GENERAL REVISIONS
3	05/09/02	DLB	GENERAL NOTES

date 09/30/1998	
scale AS NOTED	drawn by MC
design by VJK	checked by VJK
drawing no. 98-217	
sheet 3 of 8	

Print Information: J:\CADD\Cadd98\Hurst\98-217\R3-sub\98-217-03.dwg OBlanco 05/10/2002 09:21:13am
05/09/02 14:06

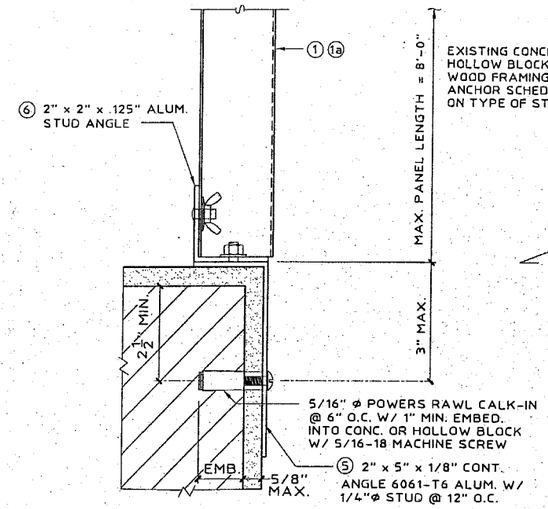

NOTE: THIS DETAIL MAY BE USED AT TOP OR BOTTOM OF PANEL.

(MAX. DESIGN LOAD ± 72 PSF)

Ⓟ EDGE MOUNT DETAIL

SCALE : 3" = 1'-0"

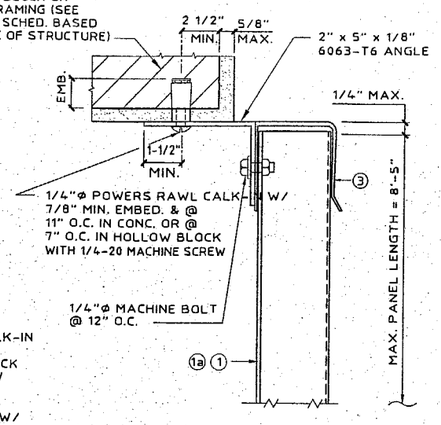

(MAX. DESIGN LOAD ± 72 PSF)

Ⓢ ANGLE TO "U" HEADER BUILD-OUT

SCALE : 3" = 1'-0"

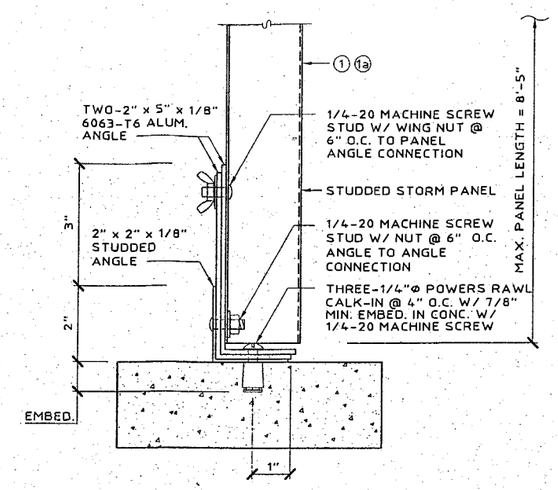

(MAX. DESIGN LOAD ± 72 PSF)

Ⓣ ASSEMBLY MOUNT

SCALE : 3" = 1'-0"

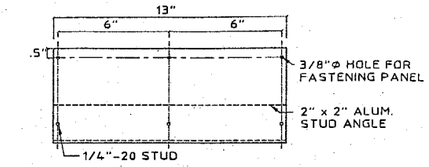

INTERIOR FASTENING ANGLE ASSEMBLY

SCALE: 1-1/2" = 1'-0"

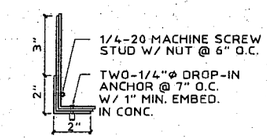

INTERIOR FASTENING ANGLE ASSEMBLY

SCALE: 1-1/2" = 1'-0"

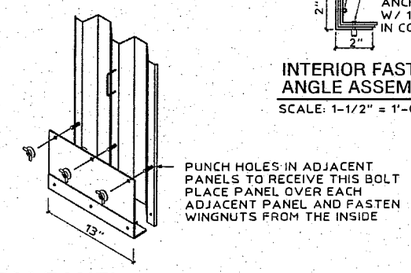

STORM PANEL INTERIOR FASTENING DETAIL (USE WITH DETAIL Ⓣ)

SCALE: N.T.S.

PRODUCT RENEWED
as complying with the Florida Buiding Code
Acceptance No. 03-0701.01
Expiration Date 07/10/2008
By Helmy A. Malek
Miami Dade Product Control Division

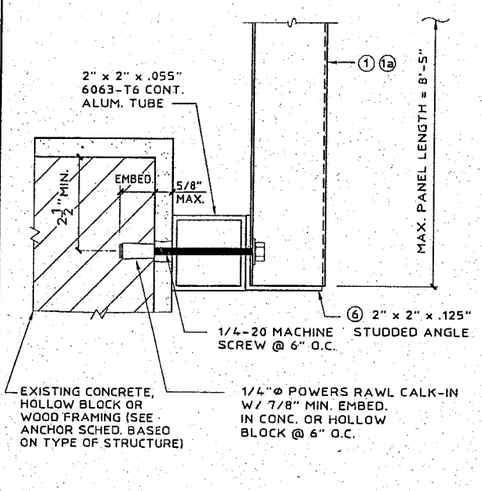

NOTE: THIS DETAIL MAY BE USED AT TOP OR BOTTOM OF PANEL.

(MAX. DESIGN LOAD ± 72 PSF)

Ⓤ 2" x 2" ALUM. TUBE BUILD-OUT

SCALE : 3" = 1'-0"

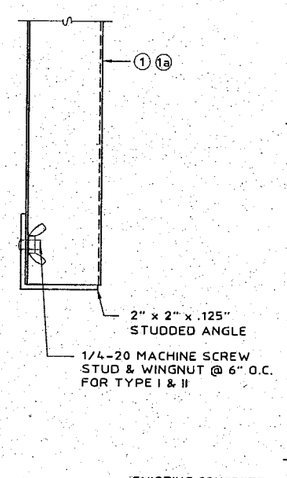

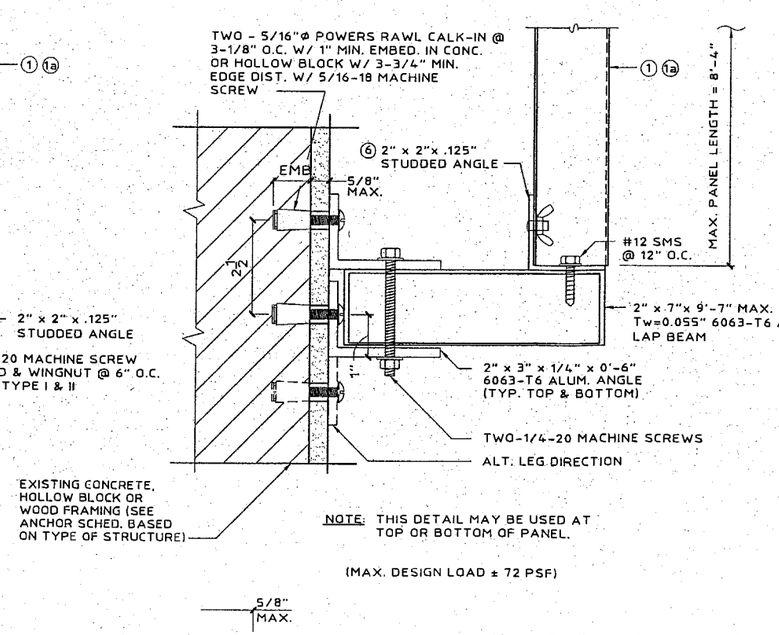

NOTE: THIS DETAIL MAY BE USED AT TOP OR BOTTOM OF PANEL.

(MAX. DESIGN LOAD ± 72 PSF)

Ⓥ STORM PANEL SUPPORT BEAM

SCALE : 3" = 1'-0"

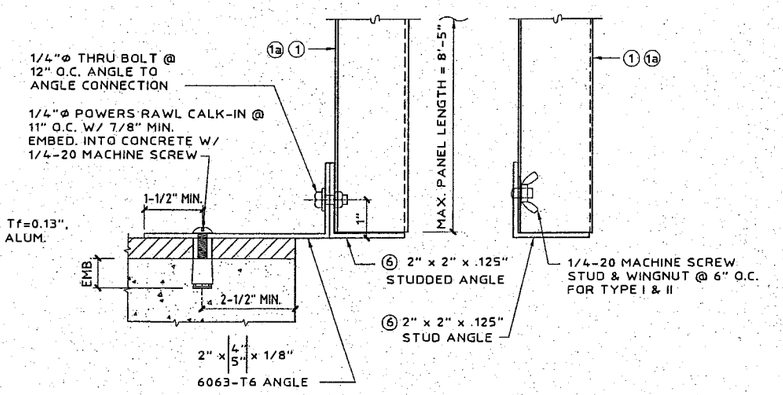

NOTE: THIS DETAIL MAY BE USED AT TOP OR BOTTOM OF PANEL.

(MAX. DESIGN LOAD ± 72 PSF)

Ⓦ STORM PANEL BUILD-OUT

SCALE : 3" = 1'-0"

PRODUCT REVISED
as complying with the Florida Buiding Code
Acceptance No. 02-0315.08
Expiration Date 07/10/03
By
Miami Dade Product Control Division

KNEZEVICH & ASSOCIATES, INC.
CONSULTING ENGINEERS • PRODUCT TESTING
1260 N. UNIVERSITY DRIVE, SUITE 180 • FORT LAUDERDALE, FL 33322
TEL: (954) 382-2800 • FAX: (954) 382-2989 • FLORIDA COA #3205
WEBSITE: WWW.KNEZEVICH.COM • E-MAIL: KA@KNEZEVICH.COM

COPYRIGHT © 2002 KNEZEVICH & ASSOCIATES, INC.

0.063" ALUMINUM STORM PANEL

Manufacturers of Hurricane & Security Protection Products

HURST AWNING COMPANY, INC. "QUALITY SERVICE SINCE 1957"
6865 N.W. 36th Avenue
Miami, Florida 33147
Phone: (305) 635-0900
Toll Free: (800) 327-0905
Fax: (305) 634-9078

V.J. KNEZEVICH
PROFESSIONAL ENGINEER
FL License No: PE 0010983

MAY 10 2002

revisions

no	date	by	description
1	09/30/98	VJK	PREV. DRAWING # 95-330
2	01/04/98	VJK	GENERAL REVISIONS
3	05/09/02	DLB	GENERAL NOTES

date 09/30/1998

scale AS NOTED | drawn by MC

design by VJK | checked by VJK

drawing no. 98-217

sheet 4 of 8

Print Information: J:\CADD\Cadd98\Hurst\98-217\R3-sub\98-217-04.dwg OBlanco 05/10/2002 09:28:56am
05/09/02 13:20

TABLE 1 — STORM PANEL (1) & (1a) SCHEDULE

NEGATIVE DESIGN LOAD (W) (PSF)	TYPE I: FOR ALL MOUNTING CONDITIONS AT TOP (STUDS @ 6" O.C. OR 6-1/4" O.C. FOR "F" TRACK AND STUD ANGLE MOUNTS AT BOTTOM) *	TYPE II: FOR STUD ANGLE MOUNTS OR 'F' TRACK MOUNTS W/ STUDS @ 6" O.C., DIRECT MOUNTS W/ ANCHORS @ 6" O.C. OR 6-1/4" O.C. (REQUIRED AT TOP AND BOTTOM) *	TYPE III: FOR STUD ANGLE MOUNTS, "F" TRACK MOUNTS, OR DIRECT MOUNTS @ 12" O.C. OR 12-1/2" O.C. *	
			(A) ABOVE CONDITIONS TOP & BOTTOM W/ NO SPRING LOCKING CLIP	(B) ABOVE CONDITIONS AT TOP & SPRING LOCKING CLIP AT BOTTOM
	L max. (FT-IN)	L max. (FT-IN)	L max. (FT-IN)	L max. (FT-IN)
40.0	8 - 5	10 - 8	11 - 0	8 - 8
50.0	8 - 5	10 - 5	10 - 5	8 - 8
60.0	8 - 5	9 - 11	9 - 11	8 - 7
70.0	8 - 5	9 - 7	8 - 9	7 - 4
75.0	8 - 0	9 - 5	8 - 5	6 - 10
80.0	7 - 6	9 - 3	7 - 8	6 - 5
90.0	6 - 8	9 - 0	6 - 10	5 - 9
100.0	6 - 0	8 - 9	6 - 2	5 - 2
110.0	5 - 6	8 - 7	5 - 7	4 - 8
120.0	5 - 0	8 - 4	5 - 1	4 - 3
130.0	4 - 7	8 - 2	4 - 9	3 - 11
140.0	4 - 3	7 - 10	4 - 4	3 - 8
150.0	4 - 0	7 - 4	4 - 1	3 - 5
160.0	3 - 9	6 - 11	3 - 10	3 - 2
170.0	3 - 6	6 - 6	3 - 7	3 - 0
180.0	3 - 4	6 - 1	3 - 5	2 - 10
190.0	3 - 2	5 - 9	3 - 3	2 - 8
200.0	3 - 0	5 - 6	3 - 1	2 - 7
210.0	2 - 10	5 - 3	2 - 11	2 - 5
220.0	2 - 9	5 - 0	2 - 9	2 - 4
230.0	2 - 7	4 - 9	2 - 8	2 - 3

* NOTES:

1. ENTER TABLE 1 WITH NEGATIVE DESIGN LOAD TO DETERMINE MAXIMUM PANEL LENGTH.
2. REFERENCE APPROPRIATE COLUMN IN STORM PANEL SCHEDULE BASED ON MOUNTING CONDITIONS IN FIELD.
3. SEE NOTE No. 17 ON PAGE 1 OF 8.

PRODUCT RENEWED
as complying with the Florida Buiding Code
Acceptance No 03-0701.01
Expiration Date 07/10/2008
By
Miami Dade Product Control Division

PRODUCT REVISED
as complying with the Florida Buiding Code
Acceptance No 02-0315.08
Expiration Date 07/10/03
By
Miami Dade Product Control Division

TABLE 2 — MIN. STORM PANEL SEPARATION FROM GLASS SCHEDULE

POSITIVE DESIGN LOAD (W) (PSF)	MAX. PANEL LENGTH (L) (FT - IN)	MINIMUM SEPARATION FOR INSTALLATIONS 30' OR LESS ABOVE GRADE (INCHES)			MINIMUM SEPARATION FOR INSTALLATIONS GREATER THAN 30' ABOVE GRADE (INCHES)
		BAR & BOLTS	NO BAR W/ BOLTS	NO BAR NO BOLTS	NO BAR & NO BOLTS
40.0	5 - 8	1-7/8	2-1/2	2-1/2	1-3/8
40.0	8 - 5	1-7/8	2-1/2	2-1/2	1-7/8
40.0	8 - 8	N/A	2-3/4	2-1/2	1-7/8
40.0	11 - 0	N/A	3	3-3/8	3
50.0	5 - 8	1-7/8	2-1/2	2-1/2	1-3/8
50.0	8 - 5	2	2-1/2	2-1/2	2
50.0	8 - 8	N/A	2-3/4	2-1/2	2
50.0	10 - 0	N/A	3	3-3/8	3
60.0	5 - 8	1-7/8	2-1/2	2-1/2	1-1/2
60.0	8 - 5	2	2-1/2	2-1/2	2-1/8
60.0	8 - 8	N/A	2-3/4	2-1/2	2-1/4
60.0	9 - 11	N/A	3	3-3/8	3
70.0	5 - 8	1-7/8	2-1/2	2-1/2	1-1/2
70.0	8 - 5	2-1/4	2-1/2	2-1/2	2-1/4
70.0	8 - 8	N/A	2-3/4	2-1/2	2-3/8
70.0	9 - 7	N/A	3	3-3/8	3
80.0	5 - 8	N/A	2-1/2	2-1/2	1-1/2
80.0	8 - 5	N/A	2-1/2	2-1/2	2-1/2
80.0	8 - 8	N/A	2-3/4	2-1/2	2-5/8
80.0	9 - 3	N/A	3	3-3/8	3
90.0	4 - 0	N/A	2-1/2	2-1/2	1-1/4
90.0	8 - 5	N/A	2-5/8	2-5/8	2-5/8
90.0	8 - 8	N/A	2-3/4	2-3/4	2-3/4
90.0	9 - 0	N/A	3	3-3/8	3
100.0	4 - 0	N/A	2-1/2	2-1/2	1-1/4
100.0	8 - 5	N/A	2-3/4	2-3/4	2-3/4
100.0	8 - 8	N/A	2-7/8	2-7/8	2-7/8
100.0	8 - 9	N/A	3	3-3/8	3
110.0	4 - 0	N/A	2-1/2	2-1/2	1-3/8
110.0	6 - 0	N/A	2-1/2	2-1/2	1-5/8
110.0	8 - 5	N/A	2-7/8	2-7/8	2-7/8
110.0	8 - 7	N/A	3	3	3
120.0	3 - 0	N/A	2-1/2	2-1/2	1-1/4
120.0	5 - 0	N/A	2-1/2	2-1/2	1-1/2
120.0	8 - 4	N/A	3	3	3

NOTES:

1. ENTER TABLE 2 WITH POSITIVE DESIGN LOAD TO DETERMINE MINIMUM PANEL SEPARATION FROM GLASS.
2. FOR DESIGN LOADS BETWEEN TABULATED VALUES USE NEXT HIGHER LOAD OR LINEAR INTERPOLATION MAY BE USED TO DETERMINE ALLOWABLE PANEL LENGTH.
3. " N/A " DESIGNATES NOT APPLICABLE - MUST MEET "NO BAR" REQUIREMENTS.

KNEZEVICH & ASSOCIATES, INC.
CONSULTING ENGINEERS • PRODUCT TESTING
1260 N. UNIVERSITY DRIVE, SUITE 180 • FORT LAUDERDALE, FL 33322
TEL: (954) 382-2800 • FAX: (954) 382-2989 • FLORIDA COA #3205
WEBSITE: WWW.KNEZEVICH.COM • E-MAIL: KA@KNEZEVICH.COM

COPYRIGHT © 2002 KNEZEVICH & ASSOCIATES, INC

0.063" ALUMINUM STORM PANEL

Manufacturers of Hurricane & Security Protection Products
6865 N.W. 36th Avenue
Miami, Florida 33147
Phone: (305) 635-0900
Toll Free: (800) 327-0905
Fax: (305) 634-9078
HURST AWNING COMPANY, INC. "QUALITY SERVICE SINCE 1957"

V.J. KNEZEVICH
PROFESSIONAL ENGINEER
FL License No: PE 0010983

MAY 1 0 2002

revisions			
no	date	by	description
1	09/30/98	VJK	PREV. DRAWING # 95-30
2	01/04/99	VJK	GENERAL REVISIONS
3	05/09/02	LB	GENERAL NOTES

date 09/30/1998
scale AS NOTED
drawn by MC
design by VJK
checked by VJK
drawing no. 98-217
sheet 5 of 8

Print Information: J:\CADD\Cadd98\Hurst\98-217\R3-sub\98-217-05.dwg AVazquez 05/09/2002 02:19:43pm
05/09/02 14:19

ANCHOR SCHEDULE

FASTENER MAXIMUM SPACING (INCHES) REQUIRED FOR VARIOUS DESIGN LOADS AND SPANS

EXISTING STRUCTURE	ANCHOR TYPE	LOAD (W) PSF MAX. (SEE NOTE 1)	3/4" EDGE DISTANCE														
			SPANS UP TO 5'-0" (SEE NOTE 1)					SPANS UP TO 8'-5" (SEE NOTE 1)					SPANS UP TO 11'-0" (SEE NOTE 1)				
			CONNECTION TYPE					CONNECTION TYPE					CONNECTION TYPE				
			1	2	3	4	5	1	2	3	4	5	1	2	3	4	5
WOOD	1/4"Φ WOOD LAG SCREW W/ 1-3/4" THREAD PENETRATION (SHEAR PARALLEL TO GRAIN)	48.0	12.5	12.5	12.5	12.5	12.5	12.5	11	12.5	12.5	9	12.5	7	12.5	12.5	6
		62.0	12.5	12.5	12.5	12.5	11	12.5	7	12.5	12.5	7	12.5	5	12.5	12.5	5
		72.0	12.5	12.5	12.5	12.5	10	12.5	5	12.5	12.5	6	12.5	4	11	8	4
		92.0	12.5	9	12.5	12.5	7	12.5	4	12	9	4	12.5	3	6	5	3
		230.0	11		5	4	3	11		5	4	3	11		5	4	3
	1/4"Φ WOOD LAG SCREW W/ 1-3/4" THREAD PENETRATION (SHEAR PERPENDICULAR TO GRAIN)	48.0	12.5	12.5	12.5	12.5	12	12.5	11	12.5	12.5	7	12.5	7	12.5	12.5	5
		62.0	12.5	12.5	12.5	12.5	9	12.5	7	12.5	12.5	5	12.5	5	12.5	12.5	4
		72.0	12.5	12.5	12.5	12.5	8	12.5	5	12.5	12.5	4	12.5	4	11	8	3
		92.0	12.5	9	12.5	12.5	6	12.5	4	12	9	3	12.5	3	6	5	
		230.0	11		5	4		11		5	4		11		5	4	
	* * 1/4"Φ ELCO MALE/ FEMALE "PANELMATE" W/ 1-7/8 MIN. EMBEDMENT & 1/4-20 MACHINE SCREW WITH NUT	48.0	12.5	12.5	12.5	12.5	12.5	12.5	12	12.5	12.5	12	12.5	8	12.5	12.5	9
		62.0	12.5	12.5	12.5	12.5	12.5	12.5	8	12.5	12.5	9	12.5	5	12.5	12.5	7
		72.0	12.5	12.5	12.5	12.5	12.5	12.5	6	12.5	12.5	8	12.5	4	12.5	9	6
		92.0	12.5	10	12.5	12.5	10	12.5	4	12.5	10	6	12.5	3	7	6	4
		230.0	12.5	3	6	5	4	12.5	3	6	5	4	12.5	3	6	5	4

ANCHOR NOTES:

1. SPANS & LOADS SHOWN HERE ARE FOR DETERMINING ANCHOR SPACING ONLY. ALLOWABLE SHUTTER SPANS FOR SPECIFIC LOADS MUST BE LIMITED TO THOSE SHOWN IN TABLE 1, SHEET 5
2. ENTER TABLE BASED ON THE EXISTING STRUCTURE MATERIAL, ANCHOR TYPE AND EDGE DISTANCE. SELECT DESIGN LOAD GREATER THAN OR EQUAL TO NEGATIVE DESIGN LOAD ON SHUTTER AND SELECT SPAN GREATER THAN OR EQUAL TO SHUTTER SPAN.
3. EXISTING STRUCTURE MAY BE CONCRETE, HOLLOW BLOCK OR WOOD FRAMING. REFERENCE ANCHOR SCHEDULE FOR PROPER ANCHOR TYPE BASED ON TYPE OF EXISTING STRUCTURE AND APPROPRIATE CONNECTION TYPE. SEE CONNECTION DETAILS FOR IDENTIFICATION OF CONNECTION TYPE.
4. ANCHORS SHALL BE INSTALLED IN ACCORDANCE WITH MANUFACTURERS' RECOMMENDATIONS.
5. MINIMUM EMBEDMENT AND EDGE DISTANCE EXCLUDES WALL FINISH OR STUCCO.
6. WHERE EXISTING STRUCTURE IS WOOD FRAMING, WOOD FRAMING CONDITIONS VARY. FIELD VERIFY THAT FASTENERS ARE INTO ADEQUATE WOOD FRAMING MEMBERS, NOT PLYWOOD.
7. WHERE LAG SCREWS FASTEN TO NARROW FACE OF STUD FRAMING, FASTENER SHALL BE LOCATED IN CENTER OF NOMINAL 2"x4" (MIN.) WOOD STUD. 3/4" EDGE DISTANCE IS ACCEPTABLE FOR WOOD FRAMING. WOOD STUD SHALL BE "SOUTHERN PINE" G=0.55 OR GREATER DENSITY. LAG SCREWS SHALL HAVE PHILLIPS PAN HEAD OR HEX HEAD.
8. MACHINE SCREWS SHALL HAVE MINIMUM OF 1/2" ENGAGEMENT OF THREADS IN BASE ANCHOR AND MAY HAVE EITHER A PAN HEAD, TRUSS HEAD, OR WAFER HEAD (SIDEWALK BOLT), U.O.N.
9. DESIGNATES ANCHOR CONDITIONS WHICH ARE NOT ACCEPTABLE USES.

* DESIGNATES ANCHORS WHUCH ARE REMOVABLE BY REMOVING WASHERED WINGNUT, NUT, OR MACHINE SCREW.

PRODUCT RENEWED
as complying with the Florida Buiding Code
Acceptance No 03-0701.01
Expiration Date 07/10/2008
By
Miami Dade Product Control Division

PRODUCT REVISED
as complying with the Florida Building Code
Acceptance No 02-0315.08
Expiration Date 07/10/08
By
Miami Dade Product Control Division

KNEZEVICH & ASSOCIATES, INC.
CONSULTING ENGINEERS • PRODUCT TESTING
1260 N. UNIVERSITY DRIVE, SUITE 180 • FORT LAUDERDALE, FL 33322
TEL: (954) 382-2800 • FAX: (954) 382-2989 • FLORIDA COA #3205
WEBSITE: WWW.KNEZEVICH.COM • E-MAIL: KA@KNEZEVICH.COM

COPYRIGHT © 2002 KNEZEVICH & ASSOCIATES, INC.

0.063" ALUMINUM STORM PANEL

Manufacturers of Hurricane & Security Protection Products
HURST AWNING COMPANY, INC. "QUALITY SERVICE SINCE 1957"
6865 N.W. 36th Avenue
Miami, Florida 33147
Phone: (305) 635-0900
Toll Free: (800) 327-0905
Fax: (305) 634-9078

V.J. KNEZEVICH
PROFESSIONAL ENGINEER
Fl. License No: PE 0010983

MAY 10 2002

revisions			
no	date	by	description
1	09/30/98	VJK	PREV. DRAWING # 95-330
2	01/04/98	VJK	GENERAL REVISIONS
3	05/09/02	DLB	GENERAL NOTES

date 09/30/1998
scale AS NOTED | drawn by MC
design by VJK | checked by VJK
drawing no. 98-217
sheet 6 of 8

Print Information: J:\CADD\Cadd98\Hurst\98-217\R3-sub\98-217-06.dwg AVazquez 05/09/2002 02:54:54pm
05/09/02 14:21

ANCHOR SCHEDULE

FASTENER MAXIMUM SPACING (INCHES) REQUIRED FOR VARIOUS DESIGN LOADS AND SPANS

EXISTING STRUCTURE	ANCHOR TYPE	LOAD (W) PSF MAX. (SEE NOTE 1)	2" EDGE DISTANCE															3" EDGE DISTANCE														
			SPANS UP TO 5'-0" (SEE NOTE 1)					SPANS UP TO 8'-5" (SEE NOTE 1)					SPANS UP TO 11'-0" (SEE NOTE 1)					SPANS UP TO 5'-0" (SEE NOTE 1)					SPANS UP TO 8'-5" (SEE NOTE 1)					SPANS UP TO 11'-0" (SEE NOTE 1)				
			CONNECTION TYPE					CONNECTION TYPE					CONNECTION TYPE					CONNECTION TYPE					CONNECTION TYPE					CONNECTION TYPE				
			1	2	3	4	5	1	2	3	4	5	1	2	3	4	5	1	2	3	4	5	1	2	3	4	5	1	2	3	4	5
CONCRETE	1/4"Φ ITW TAPCON W/ 1-1/4" MIN. EMBEDMENT (MIN. 3,100 P.S.I. CONCRETE)	48.0	12.5	12.5	12.5	12.5	12.5	12.5	7	12.5	12.5	9	12.5	4	12.5	12.5	7	12.5	12.5	12.5	12.5	12.5	12.5	7	12.5	12.5	11	12.5	5	12.5	12.5	8
		62.0	12.5	12	12.5	12.5	12	12.5	4	12.5	12.5	7	11	3	11	8	5	12.5	12.5	12.5	12.5	12.5	12.5	5	12.5	12.5	8	12.5	3	12.5	9	6
		72.0	12.5	8	12.5	12.5	10	12.5	3	12.5	12	6	10		7	5	4	12.5	9	12.5	12.5	12	12.5	4	12.5	12.5	7	11		8	6	5
		92.0	12.5	5	12.5	12.5	8	10		7	5	4	8		4	3	3	12.5	6	12.5	12.5	10	11		8	6	5	8		4	3	4
		230.0	7		3		3	7		3		3	7		3		3	8		3	3	4	8		3	3	4	8		3	3	4
	* 1/4"Φ ELCO MALE/ FEMALE "PANELMATE" W/ 1-1/4 MIN. EMBEDMENT & 1/4-20 MACHINE SCREW WITH NUT (MIN. 3,000 P.S.I. CONCRETE)	48.0	12.5	12.5	12.5	12.5	11	12.5	5	12.5	12.5	7	11	3	12	12	5	12.5	12.5	12.5	12.5	12.5	12.5	5	12.5	12.5	8	12	3	12	12	6
		62.0	12.5	9	12.5	12.5	9	12	3	12	12	5	9		9	6	4	12.5	10	12.5	12.5	10	12	3	12	12	6	9		9	6	4
		72.0	12.5	7	12.5	12.5	7	10		10	9	4	8		5	4	3	12.5	7	12.5	12.5	9	10	3	10	9	5	8		5	4	4
		92.0	12.5	4	12.5	12.5	6	8		6	4	3	6		3			12.5	4	12.5	12.5	7	8		6	4	4	6		3		3
		230.0	5					5					5					6					6					6				
	* 1/4"Φ POWERS RAWL CALK-IN W/ 7/8" EMBED. & 1/4-20 STAINLESS STEEL MACHINE SCREW (MIN. 3,000 P.S.I. CONCRETE)	48.0	12.5	12.5	12.5	12.5	12.5	12.5	11	12.5	12.5	10	12.5	7	12.5	12.5	8	12.5	12.5	12.5	12.5	12.5	12.5	12.5	12.5	12.5	12.5	12.5	9	12.5	12.5	12.5
		62.0	12.5	12.5	12.5	12.5	12.5	12.5	7	12.5	12.5	8	12.5	5	12.5	12.5	6	12.5	12.5	12.5	12.5	12.5	12.5	9	12.5	12.5	12.5	12.5	6	12.5	12.5	10
		72.0	12.5	12.5	12.5	12.5	11	12.5	6	12.5	12.5	7	12.5	4	11	9	5	12.5	12.5	12.5	12.5	12.5	12.5	7	12.5	12.5	11	12.5	5	12.5	11	8
		92.0	12.5	9	12.5	12.5	9	12.5	4	12	9	5	12.5	3	6	5	4	12.5	11	12.5	12.5	12.5	12.5	5	12.5	11	8	12.5	3	8	6	6
		230.0	12		5	4	3	12		5	4	3	12		5	4	3	12.5	3	7	5	6	12.5	3	7	5	6	12.5	3	7	5	6
	1/4"Φ POWERS RAWL ZAMAC NAIL-IN W/ 1-1/8" MIN. EMBEDMENT (MIN. 3,000 P.S.I. CONCRETE)	48.0	12.5	12.5	12.5	12.5	12.5	12.5	5	12.5	12.5	7	12	3	12	12	6	12.5	12.5	12.5	12.5	12.5	12.5	6	12.5	12.5	9	12.5	4	12.5	12.5	7
		62.0	12.5	10	12.5	12.5	10	12	3	12	12	6	9		9	6	4	12.5	11	12.5	12.5	12	12.5	4	12.5	12.5	7	10		10	7	5
		72.0	12.5	7	12.5	12.5	8	10		10	9	5	8		5	4	4	12.5	8	12.5	12.5	10	12	3	12	11	6	9		6	4	4
		92.0	12.5	4	12.5	12.5	6	8		6	4	4	6		3		3	12.5	5	12.5	12.5	8	9		6	5	5	7		3	3	3
		230.0	5					5					5					6		3		3	6		3		3	6		3		3
	1/4"Φ ITW RED HEAD DYNABOLT SLEEVE ANCHOR W/1-1/8" MIN. EMBED. (MIN. 2,100 P.S.I. CONCRETE)	48.0	12.5	12.5	12.5	12.5	12.5	12.5	7	12.5	12.5	8	12.5	4	12.5	12.5	6	12.5	12.5	12.5	12.5	12.5	12.5	9	12.5	12.5	12	12.5	5	12.5	12.5	9
		62.0	12.5	12.5	12.5	12.5	10	12.5	4	12.5	12.5	6	12	3	12	8	4	12.5	12.5	12.5	12.5	12.5	12.5	6	12.5	12.5	9	12.5	4	12.5	10	7
		72.0	12.5	9	12.5	12.5	9	12.5	3	12.5	12	5	10		7	5	4	12.5	11	12.5	12.5	12.5	12.5	4	12.5	12.5	8	12.5	3	9	7	6
		92.0	12.5	5	12.5	12.5	7	11		8	6	4	8		4	3	3	12.5	7	12.5	12.5	11	12.5	3	10	7	6	10		5	4	5
		230.0	7		3		3	7		3		3	7		3		3	9		4	3	4	9		4	3	4	9		4	3	4
	1/4"Φ POWERS RAWL DROP-IN & 1/4-20 SIDEWALK BOLT (3/4"Φ HEAD) W/ 1-1/4" MIN. EMBEDMENT (MIN. 2,000 P.S.I. CONCRETE)	48.0	12.5	12.5	12.5	12.5	12.5	12.5	10	12.5	12.5	10	12.5	6	12.5	12.5	7	12.5	12.5	12.5	12.5	12.5	12.5	12.5	12.5	12.5	12.5	12.5	8	12.5	12.5	12
		62.0	12.5	12.5	12.5	12.5	12.5	12.5	7	12.5	12.5	7	12.5	4	12.5	12	6	12.5	12.5	12.5	12.5	12.5	12.5	8	12.5	12.5	12	12.5	5	12.5	12.5	9
		72.0	12.5	12.5	12.5	12.5	11	12.5	5	12.5	12.5	6	12.5	3	11	8	5	12.5	12.5	12.5	12.5	12.5	12.5	7	12.5	12.5	10	12.5	4	12.5	10	8
		92.0	12.5	8	12.5	12.5	8	12.5	4	11	8	5	12		6	5	4	12.5	10	12.5	12.5	12.5	12.5	5	12.5	11	8	12.5	3	7	6	6
		230.0	11		5	4	3	11		5	4	3	11		5	4	3	12.5	3	6	5	5	12.5	3	6	5	5	12.5	3	6	5	5

SEE PAGE 6 FOR ANCHOR NOTES

PRODUCT RENEWED
as complying with the Florida Buiding Code
Acceptance No 03-0701.01
Expiration Date 07/10/2008
By
Miami Dade Product Control Division

PRODUCT REVISED
as complying with the Florida Buiding Code
Acceptance No 02-0315.08
Expiration Date 07/10/03
By
Miami Dade Product Control Division

KNEZEVICH & ASSOCIATES, INC.
CONSULTING ENGINEERS • PRODUCT TESTING
1260 N. UNIVERSITY DRIVE, SUITE 180 • FORT LAUDERDALE, FL 33322
TEL: (954) 382-2800 • FAX: (954) 382-2989 • FLORIDA COA #3205
WEBSITE: WWW.KNEZEVICH.COM • E-MAIL: KA@KNEZEVICH.COM
COPYRIGHT © 2002 KNEZEVICH & ASSOCIATES, INC

0.063" ALUMINUM STORM PANEL

Manufacturers of Hurricane & Security Protection Products
HURST AWNING COMPANY, INC. "QUALITY SERVICE SINCE 1957"
6865 N.W. 36th Avenue
Miami, Florida 33147
Phone: (305) 635-0900
Toll Free: (800) 327-0905
Fax: (305) 634-9078

V.J. KNEZEVICH
PROFESSIONAL ENGINEER
FL License No: PE 0010983

MAY 10 2002

revisions			
no	date	by	description
1	09/30/98	VJK	PREV. DRAWING # 95-33
2	01/04/98	VJK	GENERAL REVISIONS
3	05/09/02	OLB	GENERAL NOTES

date 09/30/1998
scale AS NOTED
drawn by MC
design by VJK
checked by VJK
drawing no. 98-217
sheet 7 of 8

Print Information: J:\CADD\Cadd98\Hurst\98-217\R3-sub\98-217-07.dwg AVazquez 05/09/2002 02:54:09pm
05/09/02 14:24

ANCHOR SCHEDULE

FASTENER MAXIMUM SPACING (INCHES) REQUIRED FOR VARIOUS DESIGN LOADS AND SPANS

EXISTING STRUCTURE	ANCHOR TYPE	LOAD (W) PSF MAX. (SEE NOTE 1)	2" EDGE DISTANCE															3" EDGE DISTANCE														
			SPANS UP TO 5'-0" (SEE NOTE 1)					SPANS UP TO 8'-5" (SEE NOTE 1)					SPANS UP TO 11'-0" (SEE NOTE 1)					SPANS UP TO 5'-0" (SEE NOTE 1)					SPANS UP TO 8'-5" (SEE NOTE 1)					SPANS UP TO 11'-0" (SEE NOTE 1)				
			CONNECTION TYPE					CONNECTION TYPE					CONNECTION TYPE					CONNECTION TYPE					CONNECTION TYPE					CONNECTION TYPE				
			1	2	3	4	5	1	2	3	4	5	1	2	3	4	5	1	2	3	4	5	1	2	3	4	5	1	2	3	4	5
HOLLOW CONCRETE BLOCK	1/4"Φ ITW TAPCON W/ 1-1/4" MIN. EMBEDMENT	48.0	12.5	12.5	12.5	12.5	9	10	3	10	10	5	8		8	8	4	12.5	12.5	12.5	12.5	11	12	4	12	12	6	9		9	9	5
		62.0	12.5	6	12.5	12.5	7	8		8	8	4	6		6	4	3	12.5	7	12.5	12.5	8	9		9	9	5	7		7	4	3
		72.0	12	4	12	12	6	7		7	6	3	5		3			12.5	5	12.5	12.5	7	8		8	7	4	6		4	3	3
		92.0	9	3	9	9	4	5		4	3		4					10	3	10	10	5	6		4	3	3	4				
		230.0	3					3					3					4					4					4				
	* * 1/4"Φ ELCO MALE/ FEMALE "PANELMATE" W/ 1-1/4 MIN. EMBEDMENT & 1/4-20 MACHINE SCREW WITH NUT	48.0	12.5	12.5	12.5	12.5	11	12.5	5	12.5	12.5	7	12	3	12	12	5	12.5	12.5	12.5	12.5	12.5	12.5	5	12.5	12.5	8	12	3	12	12	6
		62.0	12.5	9	12.5	12.5	9	12	3	12	12	5	9		9	6	4	12.5	10	12.5	12.5	10	12	3	12	12	6	9		9	6	4
		72.0	12.5	7	12.5	12.5	7	10		10	9	4	8		5	4	3	12.5	7	12.5	12.5	9	10	3	10	9	5	8		5	4	4
		92.0	12.5	4	12.5	12.5	6	8		6	4	3	6		3			12.5	4	12.5	12.5	7	8		6	4	4	6		3		3
		230.0	5					5					5					6					6					6				
	* 1/4"Φ POWERS RAWL CALK-IN W/ 7/8" EMBED. & 1/4-20 STAINLESS STEEL MACHINE SCREW	48.0	12.5	12.5	12.5	12.5	10	12.5	4	12.5	12.5	6	10	3	10	10	4	12.5	12.5	12.5	12.5	12.5	12.5	6	12.5	12.5	9	12.5	3	12.5	12.5	6
		62.0	12.5	8	12.5	12.5	7	10	3	10	10	4	8		8	5	3	12.5	10	12.5	12.5	11	12.5	3	12.5	12.5	7	10		10	7	5
		72.0	12.5	6	12.5	12.5	6	9		9	8	4	7		4	3	3	12.5	7	12.5	12.5	10	11	3	11	10	6	8		6	4	4
		92.0	12	3	12	12	5	7		5	3	3	5					12.5	4	12.5	12.5	8	9		6	4	4	6		3		3
		230.0	5					5					5					6				3	6				3	6				3
	1/4"Φ POWERS RAWL ZAMAC NAIL-IN W/ 1-1/8" MIN. EMBEDMENT	48.0	12.5	12.5	12.5	12.5	9	10	3	10	10	5	7		7	7	4	12.5	12.5	12.5	12.5	11	11	4	11	11	6	8		8	8	5
		62.0	12.5	6	12.5	12.5	7	8		8	8	4	6		6	4	3	12.5	7	12.5	12.5	8	9		9	9	5	6		6	4	4
		72.0	11	4	11	11	6	6		6	6	3	5		3			12.5	5	12.5	12.5	7	7		7	7	4	5		4	3	3
		92.0	9		9	9	5	5		3			4					10	3	10	10	6	6		4	3	3	4				
		230.0	3					3					3					4					4					4				
	1/4"Φ ITW RED HEAD DYNABOLT SLEEVE ANCHOR W/1-1/8" MIN. EMBED.	48.0	12.5	12	12.5	12.5	7	8	3	8	8	4	6		6	6	3	12.5	12.5	12.5	12.5	11	11	3	11	11	6	8		8	8	5
		62.0	11	5	11	11	6	6		6	6	3	5		5	3		12.5	6	12.5	12.5	8	8		8	8	5	6		6	4	3
		72.0	9	3	9	9	5	5		5	5	3	4		3			12	4	12	12	7	7		7	6	4	5		3	3	3
		92.0	7		7	7	4	4		3			3					9	3	9	9	5	5		4	3	3	4				
		230.0	3					3					3					4					4					4				
	* 2" SCREW ROD 1/4-20 ITW EPCON EPOXY ANCHOR W/ S.S. MACHINE SCREW W/ 2" MIN. EMBED.	48.0	12.5	12.5	12.5	12.5	12.5	12.5	10	12.5	12.5	12.5	12.5	6	12.5	12.5	11	12.5	12.5	12.5	12.5	12.5	12.5	10	12.5	12.5	12.5	12.5	6	12.5	12.5	11
		62.0	12.5	12.5	12.5	12.5	12.5	12.5	7	12.5	12.5	11	12.5	4	12.5	12	8	12.5	12.5	12.5	12.5	12.5	12.5	7	12.5	12.5	11	12.5	4	12.5	12	8
		72.0	12.5	12.5	12.5	12.5	12.5	12.5	5	12.5	12.5	9	12.5	3	10	8	7	12.5	12.5	12.5	12.5	12.5	12.5	5	12.5	12.5	9	12.5	3	10	8	7
		92.0	12.5	8	12.5	12.5	12.5	12.5	3	11	8	7	12		6	5	5	12.5	8	12.5	12.5	12.5	12.5	3	11	8	7	12		6	5	5
		230.0	11		5	4	5	11		5	4	5	11		5	4	5	11		5	4	5	11		5	4	5	11		5	4	5

SEE PAGE 6 FOR ANCHOR NOTES

PRODUCT RENEWED
as complying with the Florida Building Code
Acceptance No 03-0701.01
Expiration Date 07/10/2008
By Helmy A. Malek
Miami Dade Product Control Division

PRODUCT REVISED
as complying with the Florida Building Code
Acceptance No 02-0315.08
Expiration Date 07/10/08
By
Miami Dade Product Control Division

KNEZEVICH & ASSOCIATES, INC.
CONSULTING ENGINEERS • PRODUCT TESTING
1260 N. UNIVERSITY DRIVE, SUITE 180 • FORT LAUDERDALE, FL 33322
TEL: (954) 382-2800 • FAX: (954) 382-2989 • FLORIDA COA #3205
WEBSITE: WWW.KNEZEVICH.COM • E-MAIL: KA@KNEZEVICH.COM

COPYRIGHT © 2002 KNEZEVICH & ASSOCIATES, INC

0.063" ALUMINUM STORM PANEL

Manufacturers of Hurricane & Security Protection Products
HURST AWNING COMPANY, INC.
QUALITY SERVICE SINCE 1957
6865 N.W. 36th Avenue
Miami, Florida 33147
Phone: (305) 635-0900
Toll Free: (800) 327-0905
Fax: (305) 634-9078

V.J. KNEZEVICH
PROFESSIONAL ENGINEER
FL License No. PE 0010983

MAY 1 0 2002

revisions

no	date	by	description
1	09/30/98	VJK	PREV. DRAWING # 95-330
2	01/04/98	VJK	GENERAL REVISIONS
3	05/09/02	DLB	GENERAL NOTES

date 09/30/1998
scale AS NOTED | drawn by MC
design by VJK | checked by VJK
drawing no. 98-217
sheet 8 of 8

Print Information: J:\CADD\Cadd98\Hurst\98-217\R3-sub\98-217-08.dwg AVazquez 05/09/2002 02:53:34pm
05/09/02 14:27