MIAMI-DADE

BUILDING CODE COMPLIANCE OFFICE (BCCO)
PRODUCT CONTROL DIVISION

MIAMI-DADE COUNTY, FLORIDA
METRO-DADE FLAGLER BUILDING
140 WEST FLAGLER STREET, SUITE 1603
MIAMI, FLORIDA 33130-1563
(305) 375-2901 FAX (305) 375-2908

NOTICE OF ACCEPTANCE (NOA)

Southern Metal Products, LLC
450 West McNab Road
Ft. Lauderdale, Florida 33309

SCOPE:
This NOA is being issued under the applicable rules and regulations governing the use of construction materials. The documentation submitted has been reviewed by Miami-Dade County Product Control Division and accepted by the Board of Rules and Appeals (BORA) to be used in Miami Dade County and other areas where allowed by the Authority Having Jurisdiction (AHJ).

This NOA shall not be valid after the expiration date stated below. The Miami-Dade County Product Control Division (In Miami Dade County) and/or the AHJ (in areas other than Miami Dade County) reserve the right to have this product or material tested for quality assurance purposes. If this product or material fails to perform in the accepted manner, the manufacturer will incur the expense of such testing and the AHJ may immediately revoke, modify, or suspend the use of such product or material within their jurisdiction. BORA reserves the right to revoke this acceptance, if it is determined by Miami-Dade County Product Control Division that this product or material fails to meet the requirements of the applicable building code.

This product is approved as described herein, and has been designed to comply with the High Velocity Hurricane Zone of the Florida Building Code.

DESCRIPTION: "Wronofold A.I.R." Aluminum Accordion Shutter

APPROVAL DOCUMENT: Drawing No. 94-46, titled " Accordion Shutter Details ", sheets 1 through 6 of 6, prepared by Al-Farooq Corporation, dated June 10, 1994, last revision #J dated January 23, 2004, signed and sealed by Humayoun Farooq, P.E., bearing the Miami-Dade County Product Control Revision stamp with the Notice of Acceptance number and expiration date by the Miami-Dade County Product Control Division.

MISSILE IMPACT RATING: Large and Small Missile Impact

LABELING: Each unit shall bear a permanent label with the manufacturer's name or logo, city, state and the following statement: "Miami-Dade County Product Control Approved", unless otherwise noted herein.

RENEWAL of this NOA shall be considered after a renewal application has been filed and there has been no change in the applicable building code negatively affecting the performance of this product.

TERMINATION of this NOA will occur after the expiration date or if there has been a revision or change in the materials, use, and/or manufacture of the product or process. Misuse of this NOA as an endorsement of any product, for sales, advertising or any other purposes shall automatically terminate this NOA. Failure to comply with any section of this NOA shall be cause for termination and removal of NOA.

ADVERTISEMENT: The NOA number preceded by the words Miami-Dade County, Florida, and followed by the expiration date may be displayed in advertising literature. If any portion of the NOA is displayed, then it shall be done in its entirety.

INSPECTION: A copy of this entire NOA shall be provided to the user by the manufacturer or its distributors and shall be available for inspection at the job site at the request of the Building Official.

This NOA **revises NOA # 03-0612.03** and consists of this page 1, evidence submitted page(s) as well as approval document mentioned above.

The submitted documentation was reviewed by **Helmy A. Makar, P.E.**

PRODUCT CONTROL ACCEPTED

Helmy A. Makar
02/12/2004

NOA No 03-0716.03
Expiration Date: 07/23/2008
Approval Date: 02/12/2004

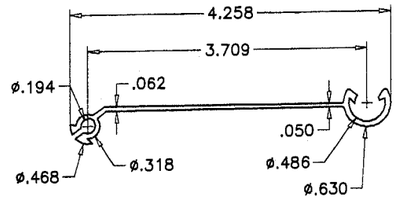

BLADE
6063–T6

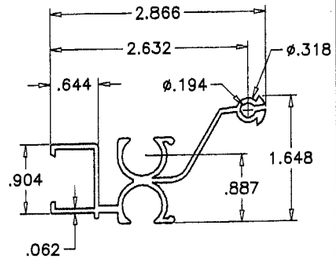

MALE LOCKING SLAT
6063–T6

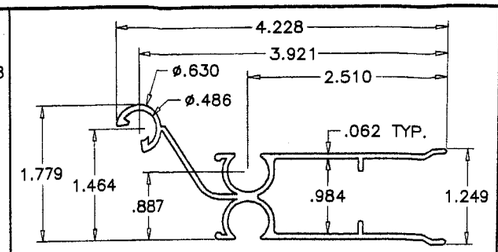

FEMALE LOCKING SLAT
6063–T6

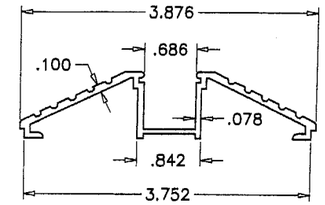

THRESHOLD TRACK
6063–T6

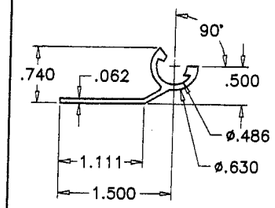

FEMALE END SLAT
6063–T6

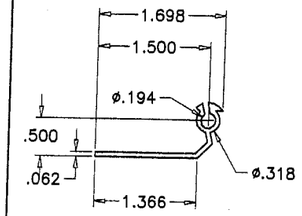

MALE END SLAT
6063–T6

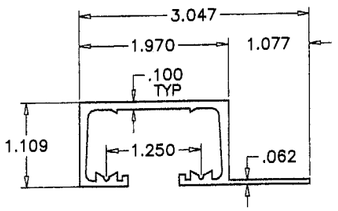

CEILING MOUNT HEADER
6063–T6

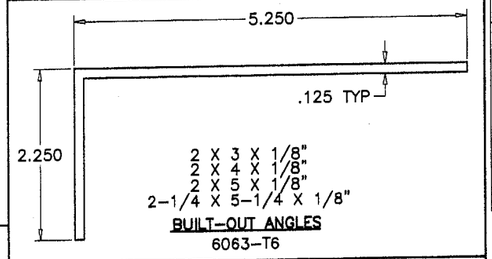

BUILT-OUT ANGLES
6063–T6

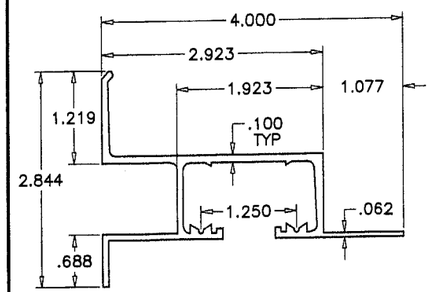

WALL MOUNT HEADER/SILL
6063–T6

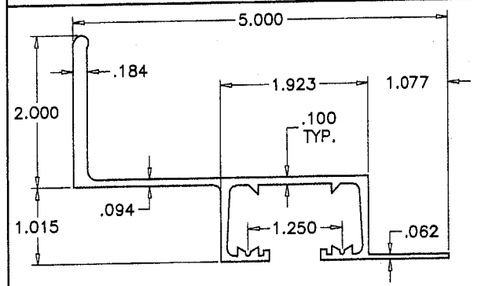

ALT. WALL MOUNT HEADER/SILL
6063–T5

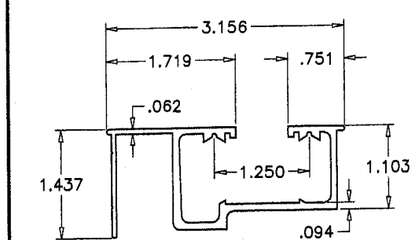

ADJ. HEADER/SILL
6063–T6

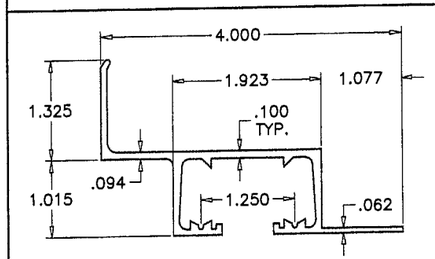

ALT. WALL MOUNT HEADER/SILL
6063–T5

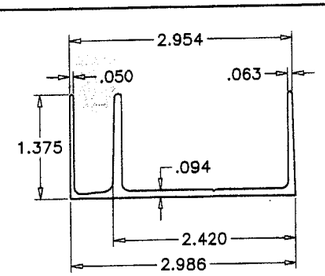

TRACK ADAPTER
6063–T6

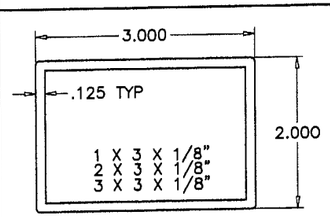

SPACER TUBE
6063–T6

DESIGN LOADS SHALL BE CALCULATED AS REQUIRED BY BUILDING CODE.

MINIMUM SEPARATION FROM GLASS REQUIRED

SHUTTER SPAN = H =		IN.
DESIGN LOAD = Pd =		PSF
FACTOR = K = Pd/100 =		IN.
READING FROM SPAN DEFLECTION CURVE = D =		IN.
DEFLECTION AT Pd = K*D =		IN.
MIN. SEPARATION REQD. = K*D+1" =		IN.
DUE TO LARGE MISSILE IMPACT MIN. SEPARATION REQD. =	3.25	IN.

FOR BUILDINGS UPTO 30' ELEVATION USE MAX. OF ABOVE TWO.
FOR BUILDINGS ABOVE 30' ELEV. IGNORE LARGE MISSILE IMPACT REQUIREMENT.

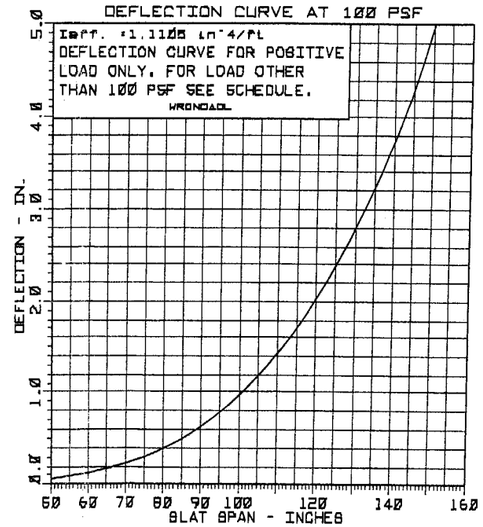

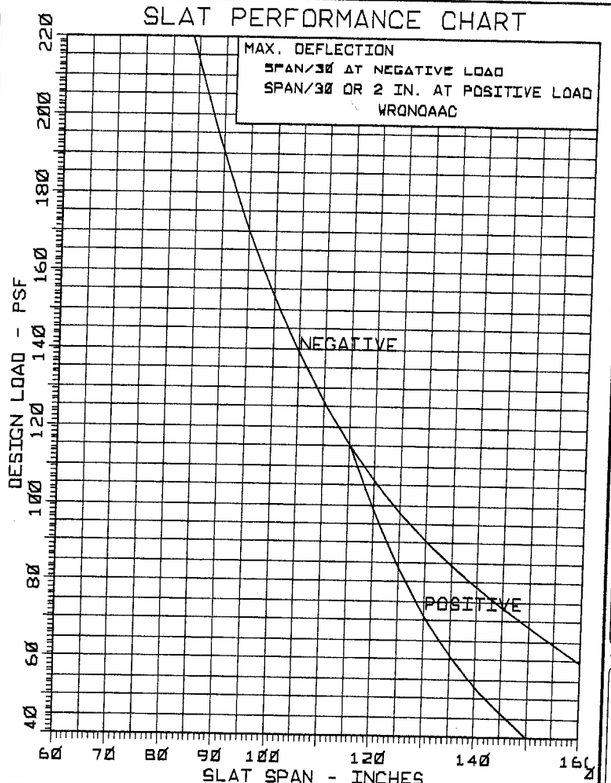

USE SLAT PERFORMANCE CHART TO VERIFY SLAT CAPACITY FOR THE REQUIRED DESIGN LOAD FOR THE PARTICULAR LOCATION. USE SPAN DEFLECTION CHART TO CALCULATE SEPARATION FROM GLASS.

GENERAL NOTES

1. THIS PRODUCT IS DESIGNED TO COMPLY WITH THE HIGH VELOCITY HURRICANE ZONE OF THE 2001 FLORIDA BUILDING CODE.
2. DESIGN CRITERIA FOR ALUMINUM, MINIMUM MECHANICAL PROPERTIES, AND SAFETY FACTORS ARE IN ACCORDANCE WITH THE "ALUMINUM CONSTRUCTION MANUAL" LATEST EDITION.
3. ALUMINUM ALLOYS: ALL EXTRUSIONS SHALL BE ALLOY 6063–T6. OR AS NOTED.
4. STEEL SURFACES TO BE PLACED IN CONTACT WITH ALUMINUM SHALL BE GIVEN ONE COAT OF ZINC CHROMATE PRIMER IN ACCORDANCE WITH FEDERAL SPEC. NO. TTP–645, OR BE GALVANIZED.
5. ANCHORS SHALL BE AS LISTED, SPACED AS SHOWN ON DETAILS. ANCHOR EMBEDMENT TO BASE MATERIAL SHALL BE BEYOND WALL DRESSING OR STUCCO.
6. ALL BOLTS, NUTS AND WASHERS SHALL BE STAINLESS STEEL OR ALUMINUM ALLOY 2024–T4 OR 7075–T6, OR PLATED STEEL.
7. DESIGN CRITERIA FOR SLATS: MAX DEFLECTION ≤ L/30 OR 2".
8. ANCHORING OR LOADING CONDITIONS OTHER THAN THOSE SHOWN IN THESE DETAILS ARE NOT PART OF THIS PRODUCT APPROVAL AND TO BE ENGINEERED SEPARATELY.
9. A 33% INCREASE IN ALLOWABLE STRESS WAS USED IN DESIGN OF ANCHOR SPACING.

PRODUCT MARKING

A PERMANENT LABEL SHALL BE AFFIXED ON LOCKING MEMBER ON UNIT ABOVE THE LOCK WITH THE FOLLOWING STATEMENT.

ALL BROWARD HURRICANE PANEL INC. FT. LAUDERDALE, FL.
WRONOFOLD 'AIR' ACCORDION SHUTTER
"MIAMI–DADE COUNTY PRODUCT CONTROL APPROVED"

FOR INSTALLATION DETAILS SEE SHEETS 2 THRU 4.

Engr: DR. HUMAYOUN FAROOQ
STRUCTURES
FLA. PE # 16557
C.A.N. 3538

JAN 28 2004

PRODUCT REVISED
as complying with the Florida Buiding Code
Acceptance No 03-0716.03
Expiration Date 07/23/2008
By [signature]
Miami Dade Product Control Division

AL-FAROOQ CORPORATION
ENGINEERS, PLANNERS & PRODUCT DESIGN
1235 SW 87 AVE
MIAMI, FLORIDA 33174
TEL. (305) 264-8100 FAX. (305) 262-6978

ACCORDION\94-46ABH

ACCORDION SHUTTER DETAILS

SOUTHERN METAL PRODUCTS, LLC – D.B.A.
ALL BROWARD HURRICANE PANEL INC.
450 WEST McNAB ROAD
FT. LAUDERDALE, FL. 33309
TEL. 1-800-432-1803 FAX. 954-973-3928

revisions:

no	date	by	description
F	04.02.02		UPDATED FOR FBC
G	07.12.02		REV. PER BCCO COMMENTS
H	06.02.03		UPDATED FOR FBC, CO. NAME REV.
I	11.13.03		REV. PER BCCO COMMENTS
J	01.23.04		REV. PER BCCO COMMENTS

date: 06-10-94
scale: 1/2" = 1"
dr. by: HAMID
chk. by:

drawing no.
94-46

CHART TO USE				
ANCHOR	CONC.	BLOCK	WOOD	METAL
A	10	7	–	–
B	7	–	–	–
D	10	7	–	–
E	–	–	9	–
G	–	–	–	7

WALL MOUNTS

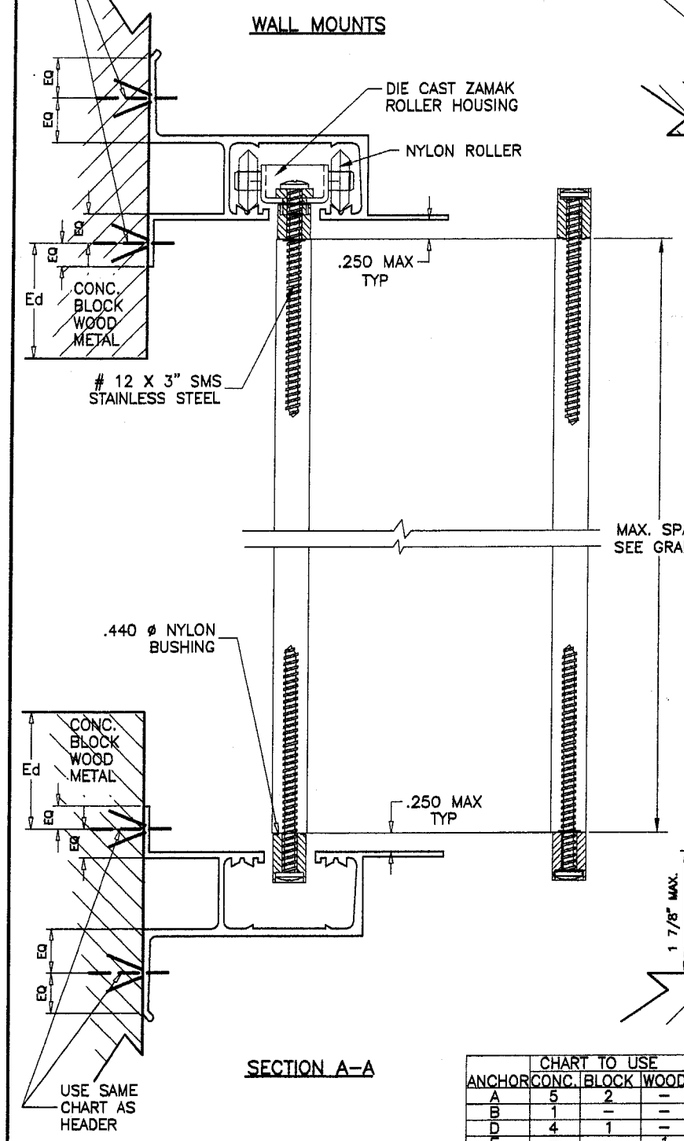

SECTION A–A

CHART TO USE				
ANCHOR	CONC.	BLOCK	WOOD	METAL
A	6	3	–	–
B	1	–	–	–
D	5	3	–	–
E	–	–	2	–
G	–	–	–	4

INSIDE MOUNTS

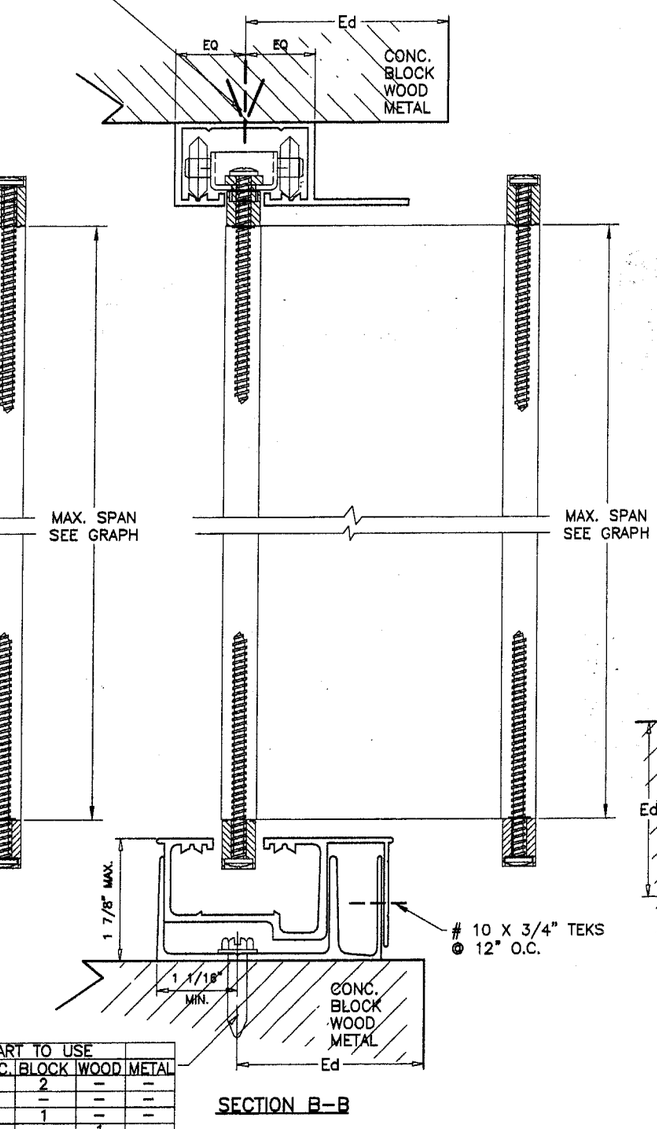

SECTION B–B

CHART TO USE				
ANCHOR	CONC.	BLOCK	WOOD	METAL
A	5	2	–	–
B	1	–	–	–
D	4	1	–	–
E	–	–	1	–
G	–	–	–	2

CHART TO USE				
ANCHOR	CONC.	BLOCK	WOOD	METAL
A	4	1	–	–
B	1	–	–	–
D	5	1	–	–
E	–	–	3	–
G	–	–	–	1

BUILT–OUT CONDITION

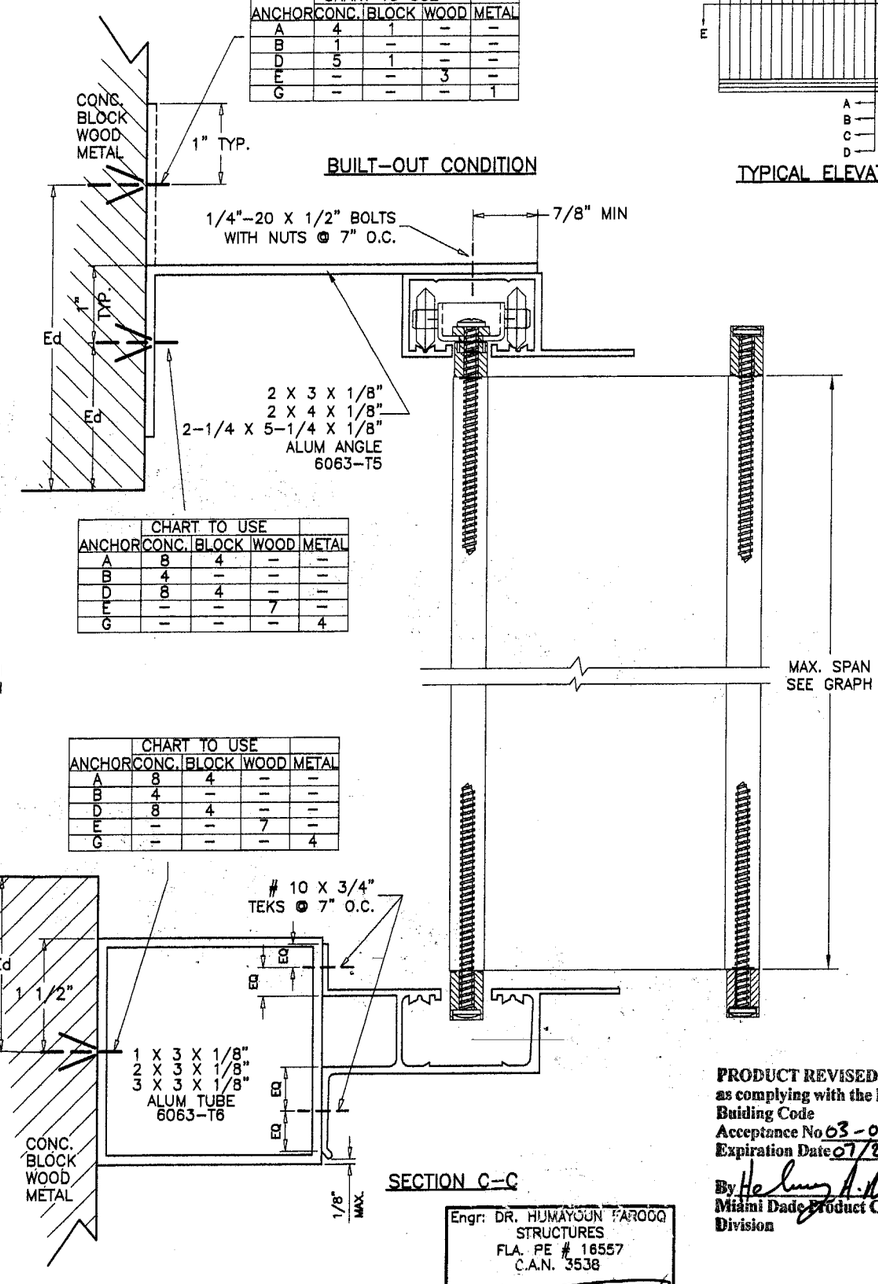

CHART TO USE				
ANCHOR	CONC.	BLOCK	WOOD	METAL
A	8	4	–	–
B	4	–	–	–
D	8	4	–	–
E	–	–	7	–
G	–	–	–	4

CHART TO USE				
ANCHOR	CONC.	BLOCK	WOOD	METAL
A	8	4	–	–
B	4	–	–	–
D	8	4	–	–
E	–	–	7	–
G	–	–	–	4

SECTION C–C

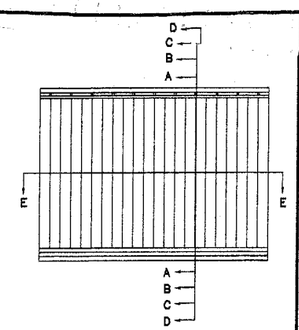

TYPICAL ELEVATION

NOTE: HEADER AND SILL DETAIL CAN BE USED IN ALL COMBINATIONS.

ANCHORS: EMBEDMENT & EDGE DISTANCES SHOWN ARE BEYOND THE WALL & FLOOR COVERING (STUCCO, TILES, ETC.)

Engr: DR. HUMAYOUN FAROOQ
STRUCTURES
FLA. PE # 16557
C.A.N. 3538

JAN 28 2004

PRODUCT REVISED
as complying with the Florida Buiding Code
Acceptance No 03-0716.03
Expiration Date 07/23/2008
By [signature]
Miami Dade Product Control Division

AL-FAROOQ CORPORATION
ENGINEERS, PLANNERS & PRODUCT DESIGN
1235 SW 87 AVE
MIAMI, FLORIDA 33174
TEL. (305) 264-8100 FAX. (305) 262-6978

ACCORDION\94-46ABH

ACCORDION SHUTTER DETAILS

SOUTHERN METAL PRODUCTS, LLC – D.B.A.
ALL BROWARD HURRICANE PANEL INC.
450 WEST McNAB ROAD
FT. LAUDERDALE, FL. 33309
TEL. 1-800-432-1803 FAX. 954-973-3928

revisions:

no	date	by	description
G	07.31.02		ANGLE THICK. REV.
H	06.02.03		CO. NAME REV., ANCHORS REV.
I	11.13.03		REV. PER BCCO COMMENTS
J	01.23.04		REV. PER BCCO COMMENTS

date: 06-10-94
scale: 1/2" = 1"
dr. by: HAMID
chk. by:

drawing no. 94-46

sheet 2 of 6

INSIDE MOUNTS

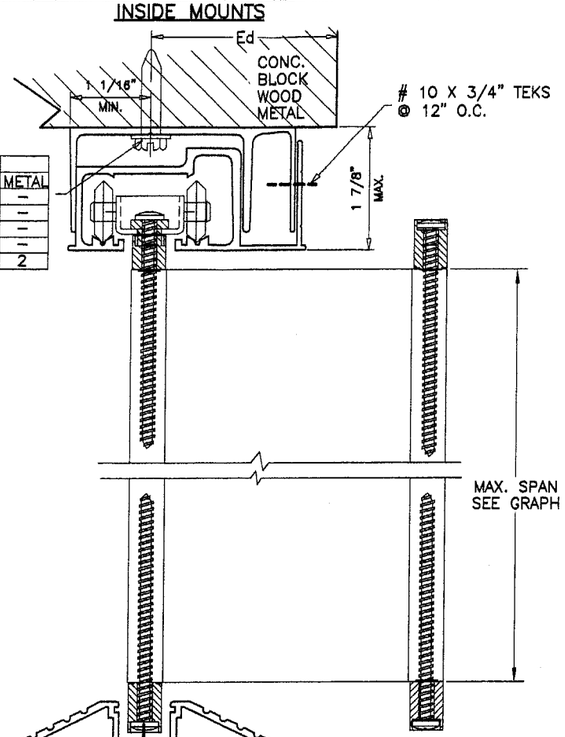

ANCHOR	CHART TO USE CONC.	BLOCK	WOOD	METAL
A	5	2	–	–
B	1	–	–	–
D	4	1	–	–
E	–	–	1	–
G	–	–	–	2

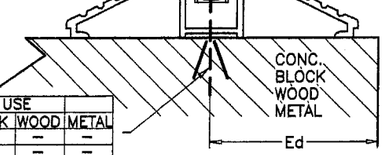

ANCHOR	CHART TO USE CONC.	BLOCK	WOOD	METAL
A	8	6	–	–
B	3	–	–	–
D	7	5	–	–
E	–	–	3	–
G	–	–	–	6

SECTION D–D

ALT. WALL MOUNTS SILL SIMILAR

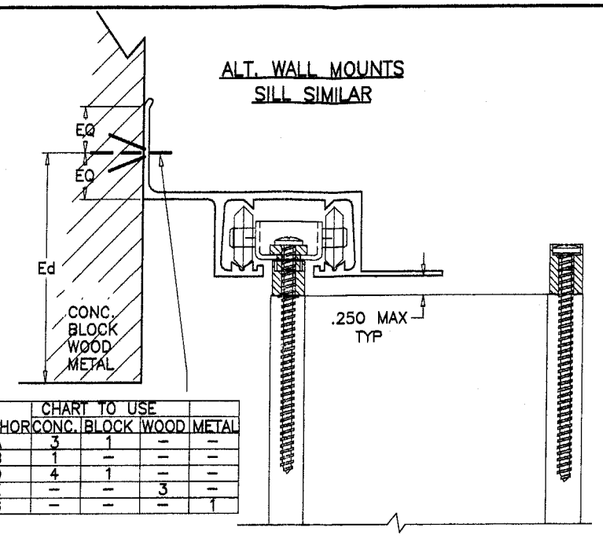

ANCHOR	CHART TO USE CONC.	BLOCK	WOOD	METAL
A	3	1	–	–
B	1	–	–	–
D	4	1	–	–
E	–	–	3	–
G	–	–	–	1

ALT. WALL MOUNTS SILL SIMILAR

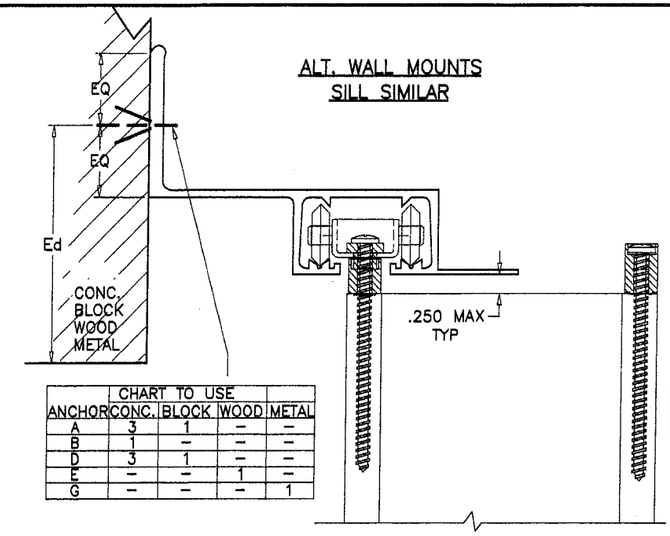

ANCHOR	CHART TO USE CONC.	BLOCK	WOOD	METAL
A	3	1	–	–
B	1	–	–	–
D	3	1	–	–
E	–	–	1	–
G	–	–	–	1

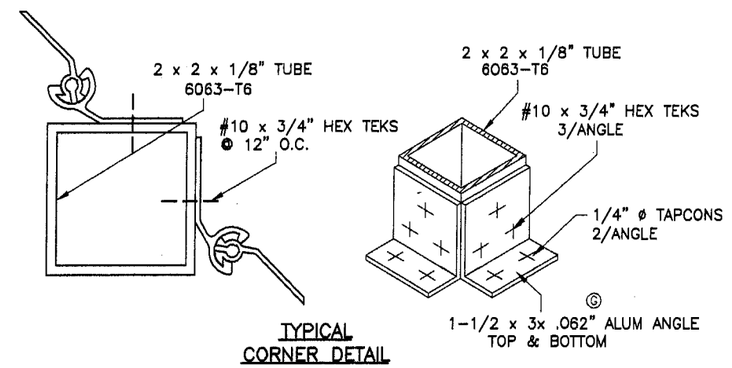

TYPICAL CORNER DETAIL

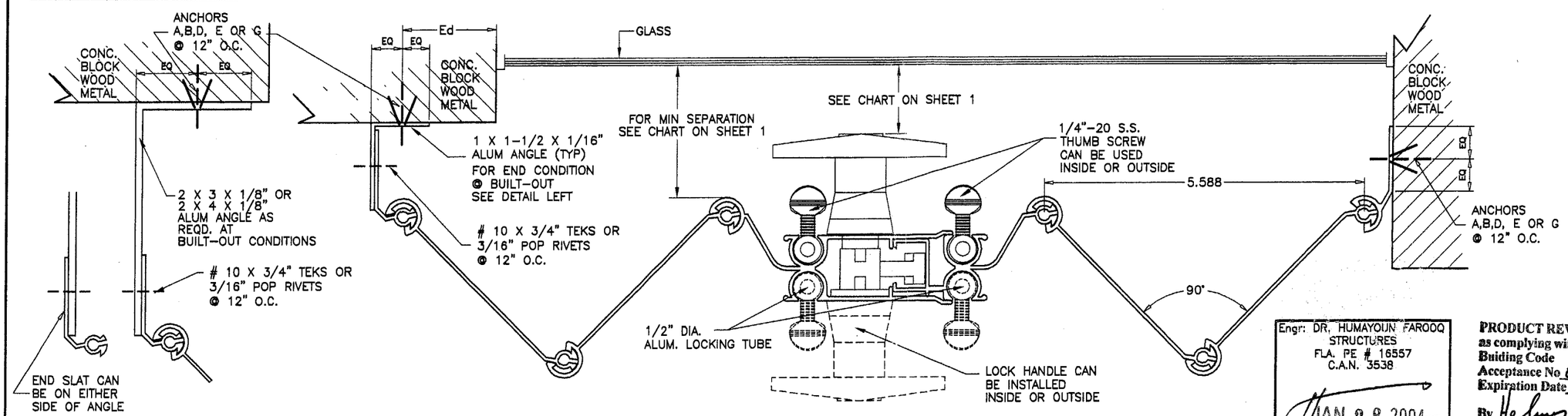

END CONDITION AT BUILT–OUT

SECTION E–E

FOR GENERAL NOTES AND EXTRUSION DETAILS SEE SHEET 1 OF 6.
FOR ANCHOR REQUIREMENTS SEE SHEET 5 OF 6.

Ed = TYPICAL EDGE DISTANCE
CONC. & BLOCK = 12d (12 ANCHOR DIAMETERS)
WOOD = 5d
FOR LESSER EDGE DISTANCES SEE SHEET 5 OF 6.

Engr: DR. HUMAYOUN FAROOQ
STRUCTURES
FLA. PE # 16557
C.A.N. 3538

JAN 28 2004

PRODUCT REVISED
as complying with the Florida Buiding Code
Acceptance No. 03-0716.03
Expiration Date 07/23/2008
By Helmy A. Moker
Miami Dade Product Control Division

AL–FAROOQ CORPORATION
ENGINEERS, PLANNERS & PRODUCT DESIGN
1235 SW 87 AVE
MIAMI, FLORIDA 33174
TEL. (305) 264–8100 FAX. (305) 262–6978

ACCORDION\94–46ABH

ACCORDION SHUTTER DETAILS

SOUTHERN METAL PRODUCTS, LLC – D.B.A.
ALL BROWARD HURRICANE PANEL INC.
450 WEST McNAB ROAD
FT. LAUDERDALE, FL. 33309
TEL. 1–800–432–1803 FAX. 954–973–3928

revisions:

no	date	by	description
G	07.31.02		ANGLE THICK. REV.
H	06.02.03		CO. NAME REV., ANCHORS REV.
I	11.13.03		REV. PER BCCO COMMENTS
J	01.23.04		REV. PER BCCO COMMENTS

date: 06–10–94
scale: 1/2" = 1"
dr. by: HAMID
chk. by:

drawing no.
94–46

sheet 3 of 6

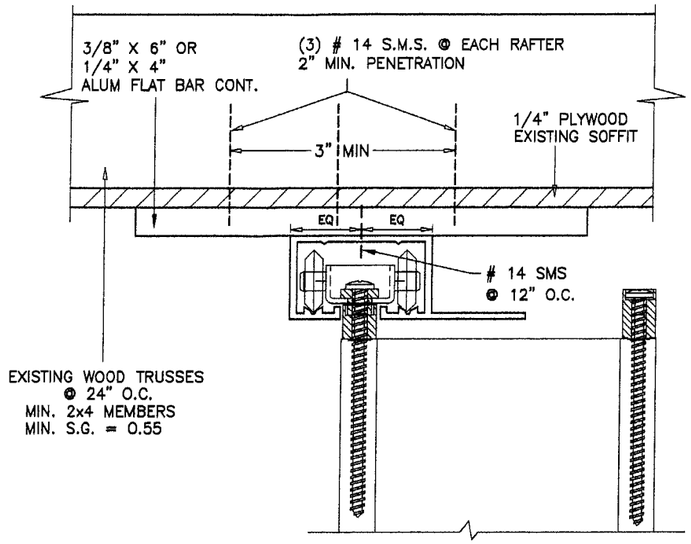

HEADER CONNECTION TO WOOD TRUSSES

FOR SHUTTER HEIGHT OF 96" MAX. DESIGN LOAD = 50 PSF
FOR SHUTTER HEIGHT OF 84" MAX. DESIGN LOAD = 57 PSF
FOR SHUTTER HEIGHT OF 72" MAX. DESIGN LOAD = 67 PSF

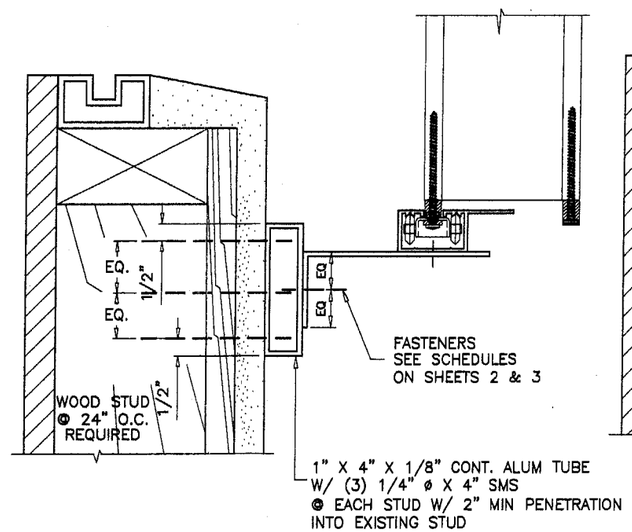

FOR SHUTTER HEIGHT OF 108" MAX. DESIGN LOAD = 88 PSF
FOR SHUTTER HEIGHT OF 96" MAX. DESIGN LOAD = 99 PSF

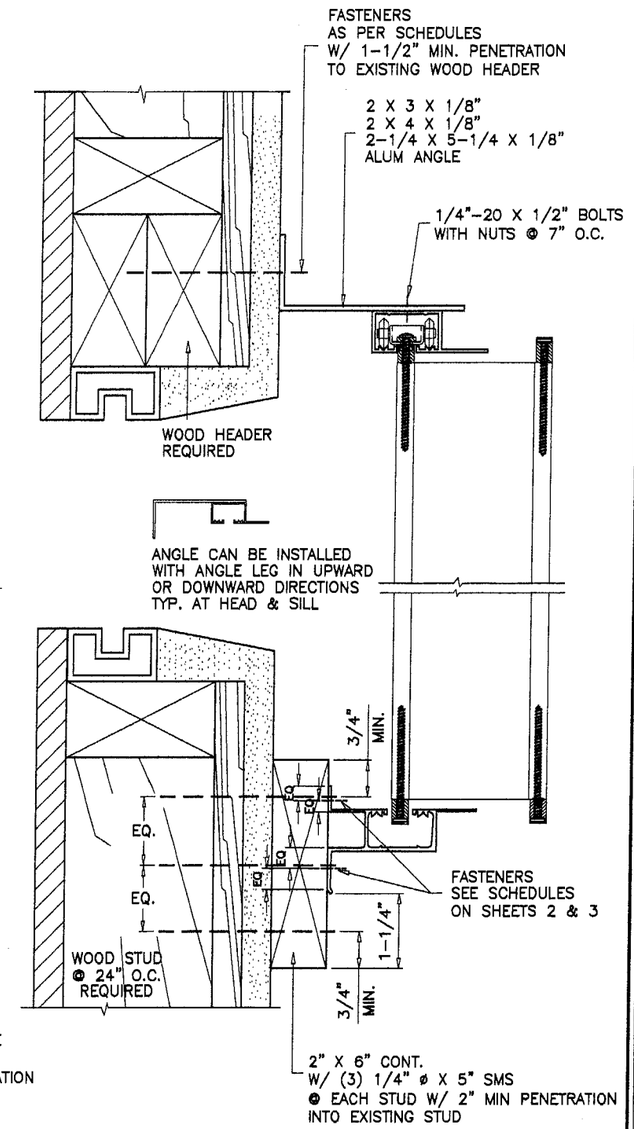

FOR SHUTTER HEIGHT OF 108" MAX. DESIGN LOAD = 130 PSF

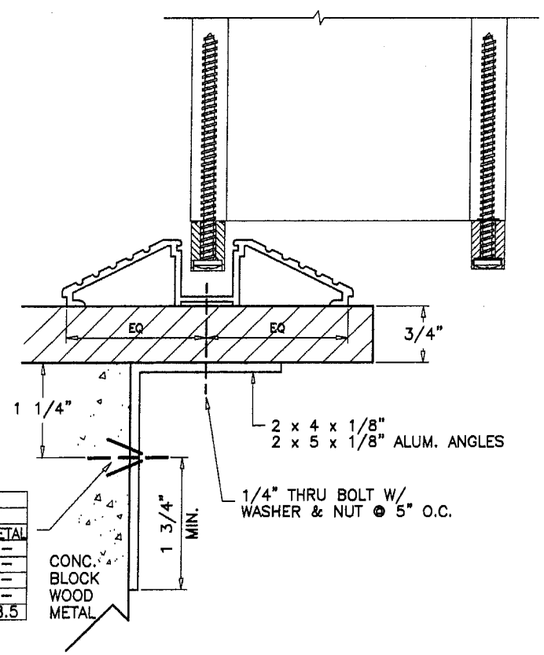

ANCHOR TYPE	ANCHOR SPACING INCHES							
	UPTO 40 PSF				UPTO 70 PSF			
	CONC	BLK.	WOOD	METAL	CONC	BLK.	WOOD	METAL
A	24	10.9	–	–	13.7	6.2	–	–
B	11.2	–	–	–	6.4	–	–	–
D	24	10.9	–	–	15	6.3	–	–
E	–	–	24	–	–	–	13.9	–
G	–	–	–	14.9	–	–	–	8.5

COUNTER TOP CONDITION

(PASS THRU WINDOW)
MAX SHUTTER HEIGHT = 6 FT.
MAX. DESIGN LOAD = 70 PSF

INSTALLATION DETAIL ON EXISTING WOOD STUDS

SCALE : 1/4"=1"

ABOVE DETAILS SHOWS CONNECTION OF 2X6 BUCK & 1X4 ALUM. TUBE TO WOOD STUDS TO PROVIDE A CONTINUOUS SURFACE FOR SHUTTER INSTALLATION.

FOR INSTALLATION DETAILS OF HEADER/SILL TO CONTINUOUS WOOD MEMBERS SEE SHEETS 2 & 3.

PRODUCT REVISED
as complying with the Florida Buiding Code
Acceptance No 03-0716.03
Expiration Date 07/23/2008
By Helena A. Helm
Miami Dade Product Control Division

Engr: DR. HUMAYOUN FAROOQ
STRUCTURES
FLA. PE # 16557
C.A.N. 3538

JAN 28 2004

AL-FAROOQ CORPORATION
ENGINEERS, PLANNERS & PRODUCT DESIGN
1235 SW 87 AVE
MIAMI, FLORIDA 33174
TEL. (305) 264-8100 FAX. (305) 262-6978

ACCORDION\94-46ABH

ACCORDION SHUTTER DETAILS

SOUTHERN METAL PRODUCTS, LLC – D.B.A.
ALL BROWARD HURRICANE PANEL INC.
450 WEST McNAB ROAD
FT. LAUDERDALE, FL 33309
TEL. 1-800-432-1803 FAX. 954-973-3928

revisions:

no	date	by	description
G	07.31.02		ANGLE THICK. REV.
H	06.02.03		CO. NAME REV., ANCHORS REV.
I	11.13.03		REV. PER BCCO COMMENTS
J	01.23.04		REV. PER BCCO COMMENTS

date: 06-10-94
scale: 1/2" = 1"
dr. by: HAMID
chk. by:

drawing no.
94-46

sheet 4 of 6

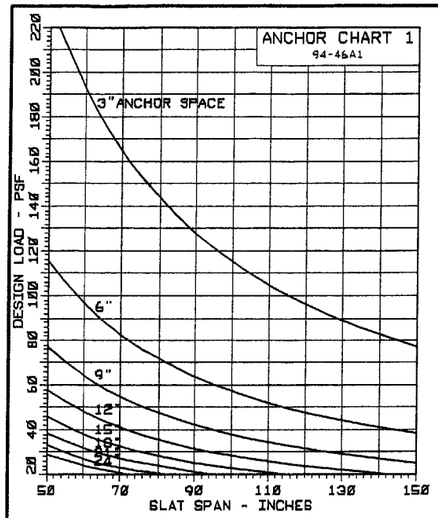

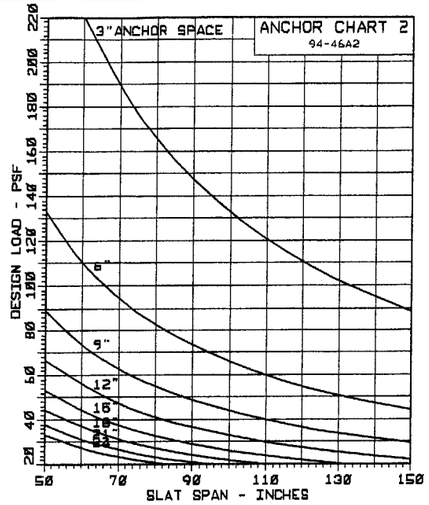

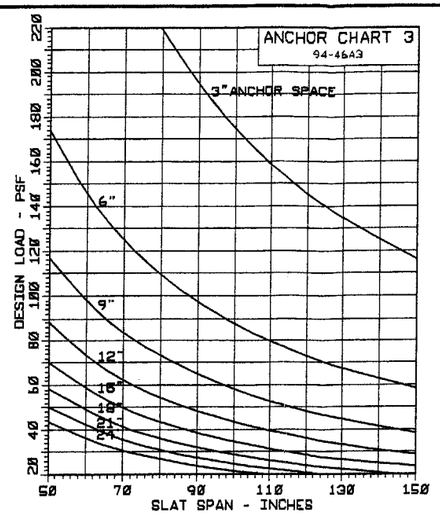

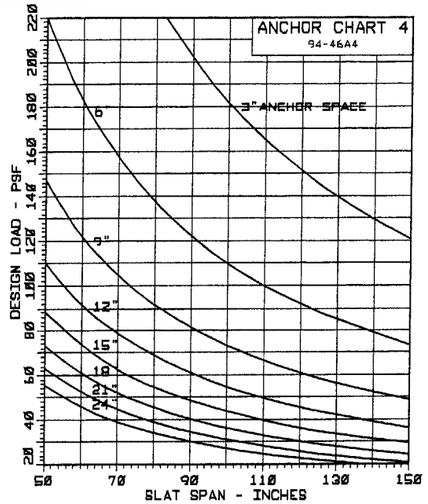

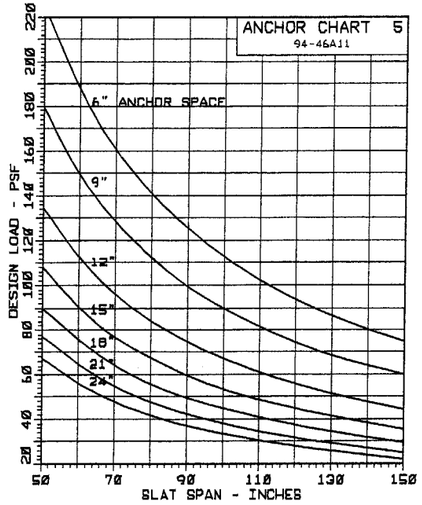

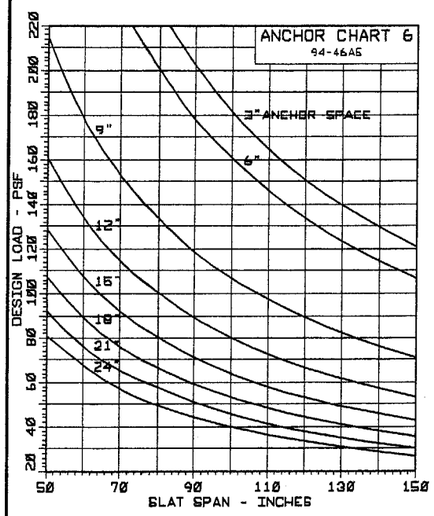

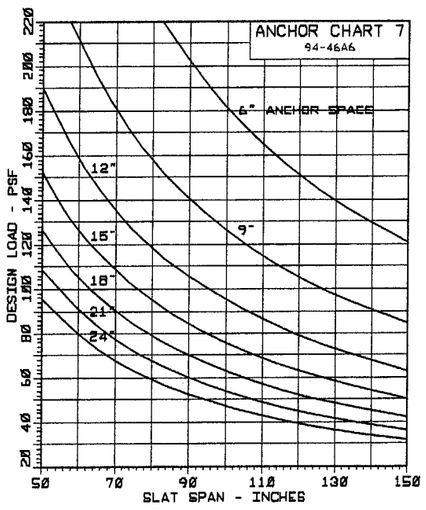

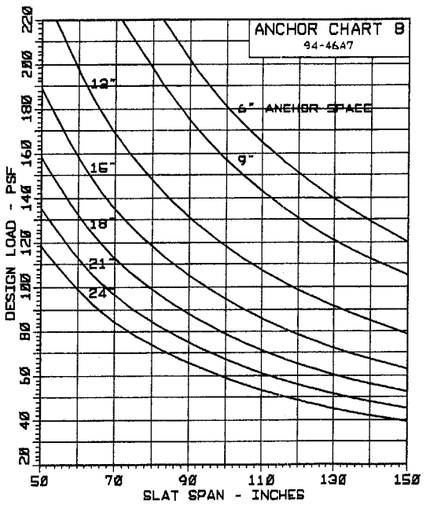

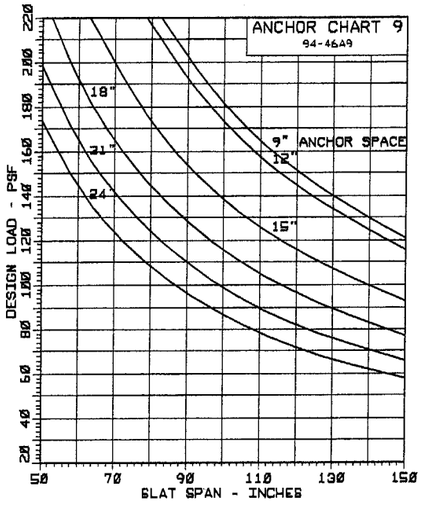

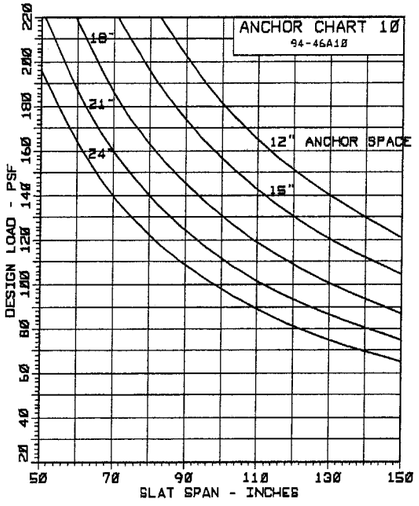

USE CHARTS 1 THRU 10 TO VERIFY ANCHOR REQUIREMENTS AND STRESS LIMITATIONS OF LOAD/SPAN COMBINATIONS FOR HEADER AND SILL.

FASTENER SPACING IN MASONRY					
CHARTS ARE BASED ON TYPICAL EDGE DISTANCE = 12d. FOR LESSER EDGE DISTANCE DECREASE SPACING BY MULTIPLYING WITH THE FACTOR BELOW					
EDGE DIST.	12d=3"	10d=2-1/2"	8d=2"	6d=1-1/2"	5d=1-1/4"
FACTOR	1.00	0.86	0.71	0.57	0.50
EXAMPLE: FOR 3" EDGE DIST. SPACING = 12" O.C. (FROM CHART) FOR 2" EDGE DIST. SPACING = 12 X .71 = 8.5 O.C.					

TYPICAL EDGE DISTANCE IN WOOD = 3/4"
TYPICAL END DISTANCE IN WOOD = 1"
NO REDUCTION FACTOR IS REQUIRED

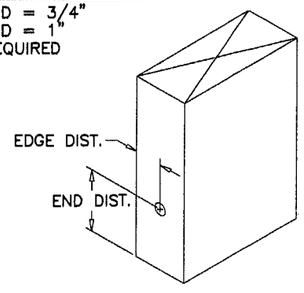

TYPICAL ANCHORS:

ANCHOR (A) = 1/4" DIA. TAPCONS (ELCO TEXTRON)
1-3/4" EMBEDMENT INTO 3000 PSI CONC.
1-1/4" EMBEDMENT INTO C-90 BLOCK

ANCHOR (B) = #14 SMS W/ 'POWERS' SCRU-LEAD
1-1/2" EMBEDMENT INTO 3000 PSI CONC.

ANCHOR (D) = 1/4" 'POWERS' CALK-IN, STAR TAMPIN OR EQUAL
TOTAL ANCHOR BODY INTO 3000 PSI CONC. OR C-90 BLOCK

ANCHOR (E) = #14 SMS
1-1/2" MIN PENETRATION INTO WOOD(S.G.=0.55)

ANCHOR (G) #14 SMS OR SELF DRILLING (TEKS) SCREWS
INTO METAL STRUCTURES
(STEEL OR ALUMINUM 1/8" MIN. THICK.)

NOTE: ANCHORS EMBEDMENT SHOWN IS BEYOND WALL & FLOOR COVERINGS (STUCCO, TILES, ETC.)

PRODUCT REVISED
as complying with the Florida Buiding Code
Acceptance No 03-0716.03
Expiration Date 07/23/2008
By Helena A. Melo
Miami Dade Product Control Division

Engr: DR. HUMAYOUN FAROOQ
STRUCTURES
FLA. PE # 16557
C.A.N. 3538

JAN 28 2004

AL-FAROOQ CORPORATION
ENGINEERS, PLANNERS & PRODUCT DESIGN
1235 SW 87 AVE
MIAMI, FLORIDA 33174
TEL. (305) 264-8100 FAX. (305) 262-6978

ACCORDION\94-46ABH

ACCORDION SHUTTER DETAILS

SOUTHERN METAL PRODUCTS, LLC - D.B.A.
ALL BROWARD HURRICANE PANEL INC.
450 WEST McNAB ROAD
FT. LAUDERDALE, FL. 33309
TEL 1-800-432-1803 FAX. 954-973-3928

revisions:

no	date	by	description
H	06.02.03		CO. NAME REV., ANCHORS REV.
I	11.13.03		REV. PER BCCO COMMENTS
J	01.23.04		NO CHANGE THIS SHEET

date: 06-10-94
scale: 1/2" = 1"
dr. by: HAMID
chk. by:

drawing no.
94-46

DESIGN LOAD CAPACITY – PSF 2" X 2" X 1/8" ALUM TUBE					
SHUTTER HEIGHT	SPAN TUBE LENGTHS				
	54"	60"	66"	72"	78"
48"	89.7	65.4	49.2	37.9	29.8
54"	79.8	58.2	43.7	33.7	26.5
60"	71.8	52.3	39.3	30.3	23.8
66"	65.3	47.6	35.7	27.5	21.7
72"	59.8	43.6	32.8	25.2	–
78"	55.2	40.3	30.2	23.3	–
84"	51.3	37.4	28.1	21.6	–
90"	47.9	34.9	26.2	20.2	–
96"	44.9	32.7	24.6	–	–
102"	42.2	30.8	23.1	–	–
108"	39.9	29.1	21.8	–	–
114"	37.8	27.5	20.7	–	–
120"	35.9	26.2	–	–	–

DESIGN LOAD CAPACITY – PSF 2" X 3" X 1/8" ALUM TUBE						
SHUTTER HEIGHT	SPAN TUBE LENGTHS					
	54"	60"	66"	72"	78"	84"
48"	100.0	100.0	100.0	100.0	79.1	63.4
54"	100.0	100.0	100.0	89.4	70.3	56.3
60"	100.0	100.0	100.0	80.5	63.3	50.7
66"	100.0	100.0	95.0	73.2	57.6	46.1
72"	100.0	100.0	87.1	67.1	52.8	42.2
78"	100.0	100.0	80.4	61.9	48.7	39.0
84"	100.0	99.4	74.6	57.5	45.2	36.2
90"	100.0	92.7	69.7	53.7	42.2	33.8
96"	100.0	86.9	65.3	50.3	39.6	31.7
102"	100.0	81.8	61.5	47.3	37.2	29.8
108"	100.0	77.3	58.1	44.7	35.2	28.2
114"	100.0	73.2	55.0	42.4	33.3	26.7
120"	95.4	69.5	52.3	40.2	31.7	25.3

DESIGN LOAD CAPACITY – PSF 2" X 4" X 1/8" ALUM TUBE							
SHUTTER HEIGHT	SPAN TUBE LENGTHS						
	54"	60"	66"	72"	78"	84"	90"
48"	100.0	100.0	100.0	100.0	100.0	100.0	100.0
54"	100.0	100.0	100.0	100.0	100.0	100.0	92.9
60"	100.0	100.0	100.0	100.0	100.0	100.0	83.6
66"	100.0	100.0	100.0	100.0	100.0	93.5	76.0
72"	100.0	100.0	100.0	100.0	100.0	85.7	69.7
78"	100.0	100.0	100.0	100.0	98.8	79.1	64.3
84"	100.0	100.0	100.0	100.0	91.7	73.5	59.7
90"	100.0	100.0	100.0	100.0	85.6	68.6	55.7
96"	100.0	100.0	100.0	100.0	80.3	64.3	52.3
102"	100.0	100.0	100.0	96.1	75.5	60.5	49.2
108"	100.0	100.0	100.0	90.7	71.4	57.1	46.4
114"	100.0	100.0	100.0	85.9	67.6	54.1	44.0
120"	100.0	100.0	100.0	81.6	64.2	51.4	41.8

DESIGN LOAD CAPACITY – PSF 2" X 5" X 1/8" ALUM TUBE							
SHUTTER HEIGHT	SPAN TUBE LENGTHS						
	54"	60"	66"	72"	78"	84"	90"
48"	100.0	100.0	100.0	100.0	100.0	100.0	100.0
54"	100.0	100.0	100.0	100.0	100.0	100.0	100.0
60"	100.0	100.0	100.0	100.0	100.0	100.0	100.0
66"	100.0	100.0	100.0	100.0	100.0	100.0	100.0
72"	100.0	100.0	100.0	100.0	100.0	100.0	100.0
78"	100.0	100.0	100.0	100.0	100.0	100.0	100.0
84"	100.0	100.0	100.0	100.0	100.0	100.0	100.0
90"	100.0	100.0	100.0	100.0	100.0	100.0	97.5
96"	100.0	100.0	100.0	100.0	100.0	100.0	91.4
102"	100.0	100.0	100.0	100.0	100.0	100.0	86.0
108"	100.0	100.0	100.0	100.0	100.0	99.9	81.2
114"	100.0	100.0	100.0	100.0	100.0	94.6	76.9
120"	100.0	100.0	100.0	100.0	100.0	89.9	73.1

DESIGN LOAD CAPACITY – PSF ANCHOR TYPE 'A'							
SHUTTER HEIGHT	SPAN TUBE LENGTHS						
	54"	60"	66"	72"	78"	84"	90"
48"	100.0	100.0	100.0	100.0	100.0	100.0	100.0
54"	100.0	100.0	100.0	100.0	100.0	100.0	100.0
60"	100.0	100.0	100.0	100.0	100.0	100.0	100.0
66"	100.0	100.0	100.0	100.0	100.0	100.0	100.0
72"	100.0	100.0	100.0	100.0	100.0	100.0	100.0
78"	100.0	100.0	100.0	100.0	100.0	100.0	100.0
84"	100.0	100.0	100.0	100.0	100.0	100.0	100.0
90"	100.0	100.0	100.0	100.0	100.0	100.0	98.1
96"	100.0	100.0	100.0	100.0	100.0	98.1	91.5
102"	100.0	100.0	100.0	100.0	99.0	92.0	85.8
108"	100.0	100.0	100.0	100.0	93.2	86.5	80.8
114"	100.0	100.0	98.6	90.3	83.4	77.4	72.3
120"	100.0	100.0	93.6	85.8	79.2	73.6	68.6

DESIGN LOAD CAPACITY – PSF ANCHOR TYPE 'B'							
SHUTTER HEIGHT	SPAN TUBE LENGTHS						
	54"	60"	66"	72"	78"	84"	90"
48"	100.0	100.0	100.0	100.0	100.0	100.0	100.0
54"	100.0	100.0	100.0	100.0	100.0	100.0	100.0
60"	100.0	100.0	100.0	100.0	100.0	100.0	100.0
66"	100.0	100.0	100.0	100.0	100.0	100.0	100.0
72"	100.0	100.0	100.0	100.0	100.0	100.0	100.0
78"	100.0	100.0	100.0	100.0	100.0	100.0	100.0
84"	100.0	100.0	100.0	100.0	100.0	100.0	100.0
90"	100.0	100.0	100.0	100.0	100.0	100.0	100.0
96"	100.0	100.0	100.0	100.0	100.0	100.0	100.0
102"	100.0	100.0	100.0	100.0	100.0	100.0	98.0
108"	100.0	100.0	100.0	100.0	100.0	98.8	92.2
114"	100.0	100.0	100.0	100.0	95.2	88.4	82.5
120"	100.0	100.0	100.0	98.0	90.4	84.0	78.4

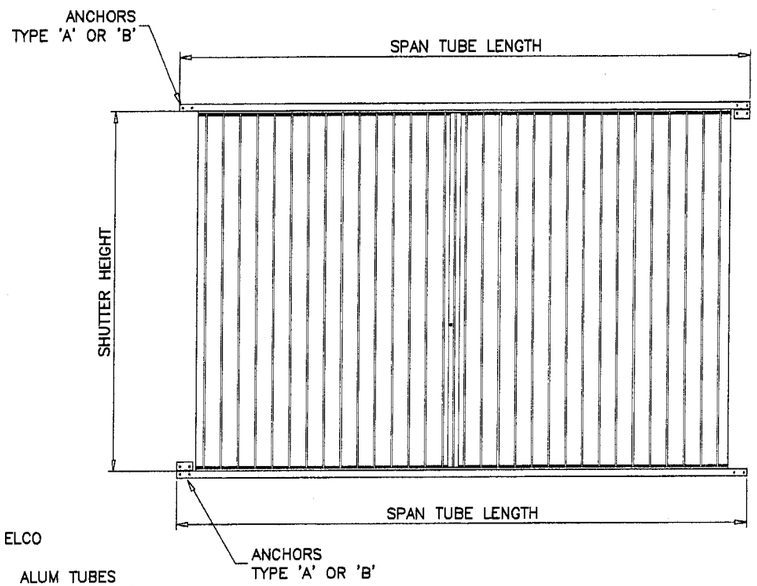

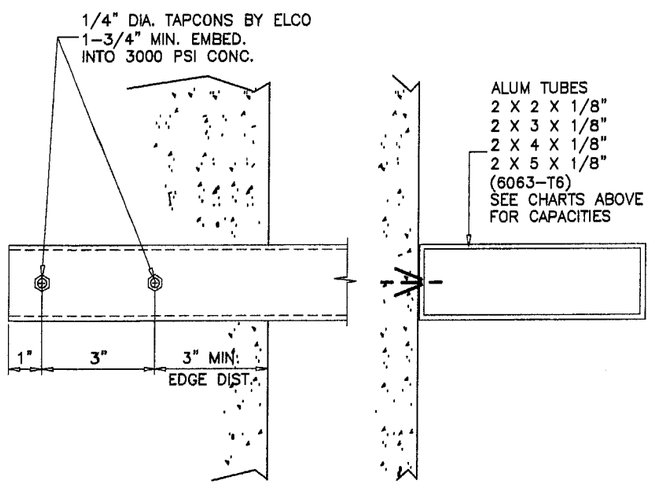

TUBE CONNECTION TO WALL
ANCHOR TYPE 'A'
SEE CHART ABOVE FOR CONNECTION CAPACITY

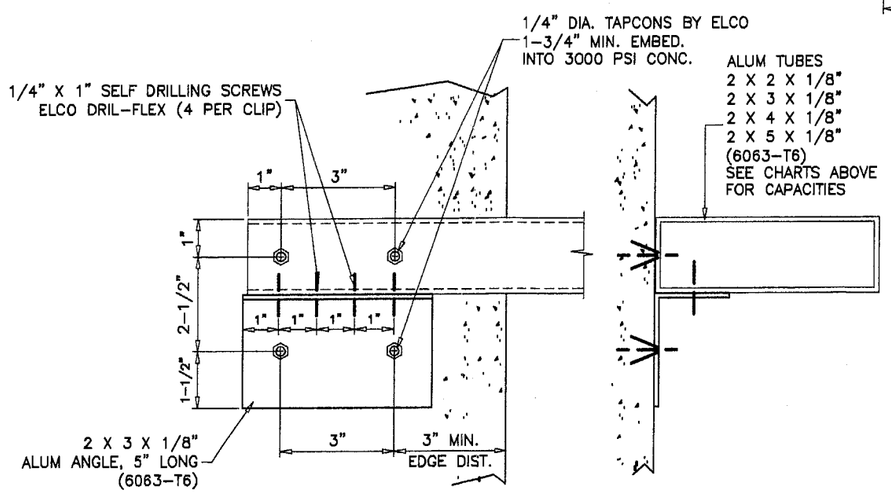

TUBE CONNECTION TO WALL
ANCHOR TYPE 'B'
SEE CHART ABOVE FOR CONNECTION CAPACITY

NOTE:
THE DESIGN PRESSURE OF THE SHUTTER IS THE SMALLER ALLOWABLE PRESSURE OF THE ALUMINUM TUBE AND THE ANCHOR TYPE.

Engr: DR. HUMAYOUN FAROOQ
STRUCTURES
FLA. PE # 16557
C.A.N. 3538

JAN 28 2004

PRODUCT REVISED
as complying with the Florida Building Code
Acceptance No. 03-0716.03
Expiration Date 07/23/2008
By Helena A. Molina
Miami Dade Product Control Division

AL-FAROOQ CORPORATION
ENGINEERS, PLANNERS & PRODUCT DESIGN
1235 SW 87 AVE
MIAMI, FLORIDA 33174
TEL. (305) 264-8100 FAX. (305) 262-6978

ACCORDION 94-46ABH

ACCORDION SHUTTER DETAILS

SOUTHERN METAL PRODUCTS, LLC – D.B.A.
ALL BROWARD HURRICANE PANEL INC.
450 WEST McNAB ROAD
FT. LAUDERDALE, FL. 33309
TEL. 1-800-432-1803 FAX. 954-973-3928

revisions:

no	date	by	description
H	06.02.03		SHEET ADDED
I	11.13.03		REV. PER BCCO COMMENTS
J	01.23.04		NO CHANGE THIS SHEET

date: 06-10-94
scale: 1/4" = 1"
dr. by: HAMID
chk. by:

drawing no.
94-46

sheet 6 of 6