MIAMI-DADE

BUILDING CODE COMPLIANCE OFFICE (BCCO)
PRODUCT CONTROL DIVISION

MIAMI-DADE COUNTY, FLORIDA
METRO-DADE FLAGLER BUILDING
140 WEST FLAGLER STREET, SUITE 1603
MIAMI, FLORIDA 33130-1563
(305) 375-2901 FAX (305) 375-2908

NOTICE OF ACCEPTANCE (NOA)

Vistawall Architectural
803 Airport Road
Terrell, Texas 75160

SCOPE:
This NOA is being issued under the applicable rules and regulations governing the use of construction materials. The documentation submitted has been reviewed by Miami-Dade County Product Control Division and accepted by the Board of Rules and Appeals (BORA) to be used in Miami Dade County and other areas where allowed by the Authority Having Jurisdiction (AHJ).

This NOA shall not be valid after the expiration date stated below. The Miami-Dade County Product Control Division (In Miami Dade County) and/or the AHJ (in areas other than Miami Dade County) reserve the right to have this product or material tested for quality assurance purposes. If this product or material fails to perform in the accepted manner, the manufacturer will incur the expense of such testing and the AHJ may immediately revoke, modify, or suspend the use of such product or material within their jurisdiction. BORA reserves the right to revoke this acceptance, if it is determined by Miami-Dade County Product Control Division that this product or material fails to meet the requirements of the applicable building code.

This product is approved as described herein, and has been designed to comply with the High Velocity Hurricane Zone of the Florida Building Code.

DESCRIPTION: Series "RW-5100" Ribbon Window System-L.M.

APPROVAL DOCUMENT: Drawing No. **RW5100IMP**, titled "RW-5100 Insulated Impact Ribbon Window System-Large Impact", sheets 1 through 6 of 6, prepared by manufacturer, dated 1/18/02, signed and sealed by William Cook, P.E., bearing the Miami-Dade County Product Control Approval stamp with the Notice of Acceptance number and expiration date by the Miami-Dade County Product Control Division.

MISSILE IMPACT RATING: Large and Small Missile Impact

LABELING: Each unit shall bear a permanent label with the manufacturer's name or logo, city, state and following statement: "Miami-Dade County Product Control Approved", unless otherwise noted herein.

RENEWAL of this NOA shall be considered after a renewal application has been filed and there has been no change in the applicable building code negatively affecting the performance of this product.

TERMINATION of this NOA will occur after the expiration date or if there has been a revision or change in the materials, use, and/or manufacture of the product or process. Misuse of this NOA as an endorsement of any product, for sales, advertising or any other purposes shall automatically terminate this NOA. Failure to comply with any section of this NOA shall be cause for termination and removal of NOA.

ADVERTISEMENT: The NOA number preceded by the words Miami-Dade County, Florida, and followed by the expiration date may be displayed in advertising literature. If any portion of the NOA is displayed, then it shall be done in its entirety.

INSPECTION: A copy of this entire NOA shall be provided to the user by the manufacturer or its distributors and shall be available for inspection at the job site at the request of the Building Official.
This NOA consists of this page 1 as well as approval document mentioned above.
The submitted documentation was reviewed by **Theodore Berman, P.E.**

10/9/2003

PRODUCT CONTROL ACCEPTED

Vistawall Architectural

NOTICE OF ACCEPTANCE: EVIDENCE SUBMITTED

A. DRAWINGS

1. Manufacturer's die drawings and sections.
2. Drawing No. **RW5100IMP**, titled "RW-5100 Insulated Impact Ribbon Window System-Large Impact", sheets 1 through 6 of 6, prepared by manufacturer, dated 1/18/02, signed and sealed by William Cook, P.E.

B. TESTS

1. Test reports on 1) Uniform Static Air Pressure Test, Loading per FBC,TAS 202-94
   2) Large Missile Impact Test per FBC, TAS 201-94
   3) Small Missile Impact Test per FBC, TAS 201-94
   4) Cyclic Wind Pressure Loading per FBC, TAS 203-94

   along with marked-up drawings and installation diagram of an aluminum ribbon window, prepared by Hurricane Test Laboratory, Inc., Test Report No. **HTL 0105-0815-02**, dated 8/20/02, signed and sealed by Vinu Abraham, P.E.
2. Test reports on 1) Air Infiltration Test, per FBC, TAS 202-94
   2) Uniform Static Air Pressure Test, Loading per FBC,TAS 202-94
   3) Water Resistance Test, per FBC, TAS 202-94
   4) Large Missile Impact Test per FBC, TAS 201-94
   5) Cyclic Wind Pressure Loading per FBC, TAS 203-94

   along with marked-up drawings and installation diagram of an aluminum ribbon window, prepared by Hurricane Test Laboratory, Inc., Test Report No. **HTL 0105-0619-02**, dated 6/24/02, signed and sealed by Vinu Abraham, P.E.

C. CALCULATIONS

1. Anchor calculations, ASTM-E1300-98, and structural analysis prepared by Bromley Cook Engineering, Inc., dated 6/24/03, signed and sealed by William Cook, P.E.

D. MATERIAL CERTIFICATIONS

1. Notice of Acceptance No. **021205.03** issued to Security Impact Glass Holdings L.L.C. for "SAF-GLAS" dated 1/2/03, expiring on 12/16/07.
2. Notice of Acceptance No. **01-0709.07** issued to Sheffield Plastics, Inc. for their "HYZOD Polycarbonate Sheet" dated 8/23/01, expiring on 8/27/06.

E. QUALITY ASSURANCE

1. Miami-Dade County Building Code Compliance Office.

Theodore Berman

Theodore Berman, P.E.
Deputy Director Product Control Division
NOA No 03-0718.05
Expiration Date: October 30, 2008
Approval Date: October 30, 2003

Vistawall Architectural

NOTICE OF ACCEPTANCE: EVIDENCE SUBMITTED

F. STATEMENTS

1. Statement letter of no financial interest & conformance, dated 6/12/03, signed by William Cook, P.E.
2. Laboratory compliance letter for Test Report no. **HTL 0105-0815-02 & HTL 0105-0619-02**, issued by Hurricane Test Laboratory, Inc., dated 3/21/03, signed and sealed by Vinu Abraham, P.E.

G. OTHER

1. Letter from the consultant stating that the product is in compliance with the Florida Building Code (FBC)

Theodore Berman, P.E.
Deputy Director Product Control Division
NOA No 03-0718.05
Expiration Date: October 30, 2008
Approval Date: October 30, 2003

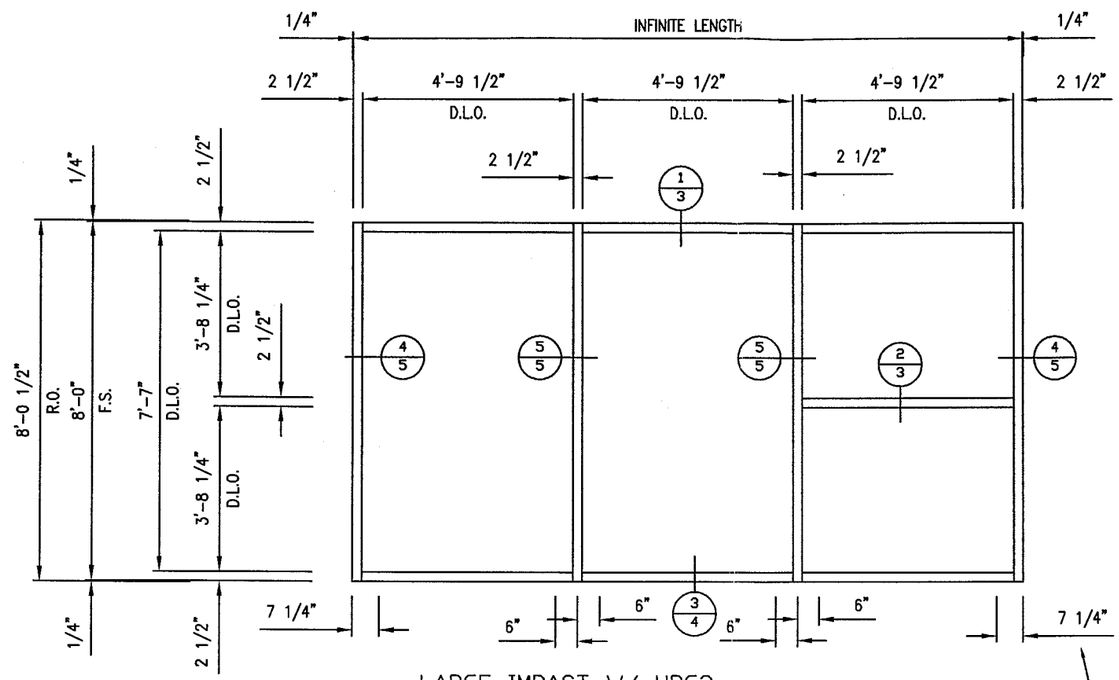

LARGE IMPACT W/ HRG2

TYPICAL ANCHOR LOCATIONS
AT HEAD AND SILL OF ALL UNITS

DESIGN PRESSURE	
70 psf (15psf WATER)	POSITIVE
80 psf	NEGATIVE

GLASS SCHEDULE

	MANUFACTURER	DESCRIPTION	GASKETS
1	SECURITY IMPACT GLASS	1/4" H.S., 1/2" AIRSPACE, 1/4" H.S. GLASS AT INNER AND OUTER FACES .070 POLYCARBONATE, .015 POLYURETHANE LAMINATE; TOTAL= .536	FG-5126 INT FG-5158 EXT
2	DLUBAK IG CLAD POLYCARBONATE	1/4" H.S., 1/2" AIRSPACE, 1/4" H.S. GLASS AT INNNER AND OUTER FACES, .080 POLYCARBONATE, .050 URETHANE LAMINATE; TOTAL= .616	FG-5126 INT FG-5157 EXT

NOTE:
ALL ALUMINUM TO BE 6063-T6

Approved as complying with the Florida Building Code
Date 10/30/03
NOA# 03-0718.05
Miami Dade Product Control Division
By

BROMLEY • COOK ENGINEERING
Structural Engineering Services
2004 N.E. 49th Street
Ft. Lauderdale, FL 33308
954-772-4624

JUN 2 4 2003

NO.	REVISION	DATE	BY

VISTAWALL
ARCHITECTURAL PRODUCTS
PRODUCT DEVELOPMENT GROUP

RW-5100 INSULATED IMPACT
RIBBON WINDOW SYSTEM-LARGE IMPACT

DATE 1/18/02
DRAWN BY JPC
DWG. NO. RW5100IMP

SHEET 1 OF 6

RW-5100 INSULATED IMPACT ACCESORIES

FASTENER SCHEDULE		
PART NO.	DESCRIPTION	APPLICATION
FS-327	#12 X 7/8" HWHTCS	GLAZING BEADS
FS-202	#8 X 1/2" PPH	JAMB CAP
FS-45	#8 X 1/2" PFH	MULL CAP/END DAM
FS-44	5/16" X 1" HHSTS	FRAME CONNECTIONS
	3/8" X 1 1/2" GRD 5 HH BOLT	ANCHOR TO STEEL
FSW-80	3/8" FLATWASHER	ANCHOR TO STEEL
FSN-81	3/8" HEX NUT	ANCHOR TO STEEL
FSW-118	3/8" LOCKWASHER	ANCHOR TO STEEL
KB II 38-334	3/8" X 3 3/4" HILTI KWIK BOLT II	ANCHOR TO CONCRETE

EXTRUSION SCHEDULE	
EXT. NO.	DESCRIPTION
RW-5134	GLAZING BEAD
RW-5135	HEAD/HORIZ TRIM
RW-5140	SILL TRIM
RW-5141	MULL CAP
RW-5142	JAMB CAP
RW-5146	JAMB MULL
RW-5147	MULLION
RW-5148	MULLION
RW-5149	HEAD
RW-5150	HORIZONTAL
RW-5151	SILL
RW-5153	SILL FACE CAP
RW-5161	END DAM
RW-5162	MULL CLIP
ICW-2	TYP. FACE CAP

GASKETS AND HARDWARE			
PART NO	DESCRIPTION	MANUFACTURER	LOCATION
CW-998	BULB GASKET	VISTAWALL	MULLIONS
ICW-12	ISOLATOR	VISTAWALL	ALL FACES @ 12" O.C.
FG-5157	EPDM GASKET	VISTAWALL	DLUBAK HRG2 EXTERIOR
FG-5158	EPDM GASKET	VISTAWALL	TYPICAL EXTERIOR
FG-5126	VINYL SPACER	VISTAWALL	TYPICAL INTERIOR
FG-5159	EPDM SETTING BLOCK	VISTAWALL	SILL & HORIZONTAL
RW5000-FP-5	VINYL WATER DIVERTER	VISTAWALL	HORIZONTALS
FG-5152	ALUM. SETTING CHAIR	VISTAWALL	SILL
FG-5160	VINYL BAFFLE RETAINER	VISTAWALL	SILL
RW5000-FP-6	MULL CAP (MADE FROM RW-5141)	VISTAWALL	HEAD & SILL MULLIONS
RW5000-FP-7	JAMB CAP (MADE FROM RW-5142)	VISTAWALL	HEAD & SILL JAMBS
RW5000-FP-9	END DAM (MADE FROM RW-5161)	VISTAWALL	HEAD & SILL MULLIONS
RW5000-PP-10	BAFFLE	VISTAWALL	SILL
RW5000-FP-11	MULLION CLIP(MADE FROM RW-5162)	VISTAWALL	MULLIONS
DOW 995	STRUCTURAL SILICONE	DOW-CORNING	INTERIOR GLASS
SPECTREM 2	SILICONE SEALANT	TREMCO	INTERIOR GLASS
SM-5601	SEALANT TAPE	SCHNEE-MOREHEAD	FRAME JOINTS
931	SEALANT	TREMCO VULKEM	PERIMETER SEAL,FRAME JOINTS

GLASS SCHEDULE			
	MANUFACTURER	DESCRIPTION	GASKETS
1	SECURITY IMPACT GLASS	1/4" H.S., 1/2" AIRSPACE, 1/4" H.S. GLASS AT INNER AND OUTER FACES .070 POLYCARBONATE. .015 POLYURETHANE LAMINATE; TOTAL= .536	FG-5126 INT FG-5158 EXT
2	DLUBAK IG CLAD POLYCARBONATE	1/4" H.S., 1/2" AIRSPACE, 1/4" H.S. GLASS AT INNNER AND OUTER FACES, .080 POLYCARBONATE, .050 URETHANE LAMINATE; TOTAL= .616	FG-5126 INT FG-5157 EXT

Approved as complying with the Florida Building Code
Date 10/30/03
NOA# 03-0718.05
Miami Dade Product Control Division
By [signature]

JUN 2 4 2003

NO.	REVISION	DATE	BY

VISTAWALL ARCHITECTURAL PRODUCTS
PRODUCT DEVELOPMENT GROUP

RW-5100 INSULATED IMPACT
RIBBON WINDOW SYSTEM-LARGE IMPACT

DATE 1/18/02
DRAWN BY JPC
DWG. NO. RW5100IMP

SHEET 2 OF 6

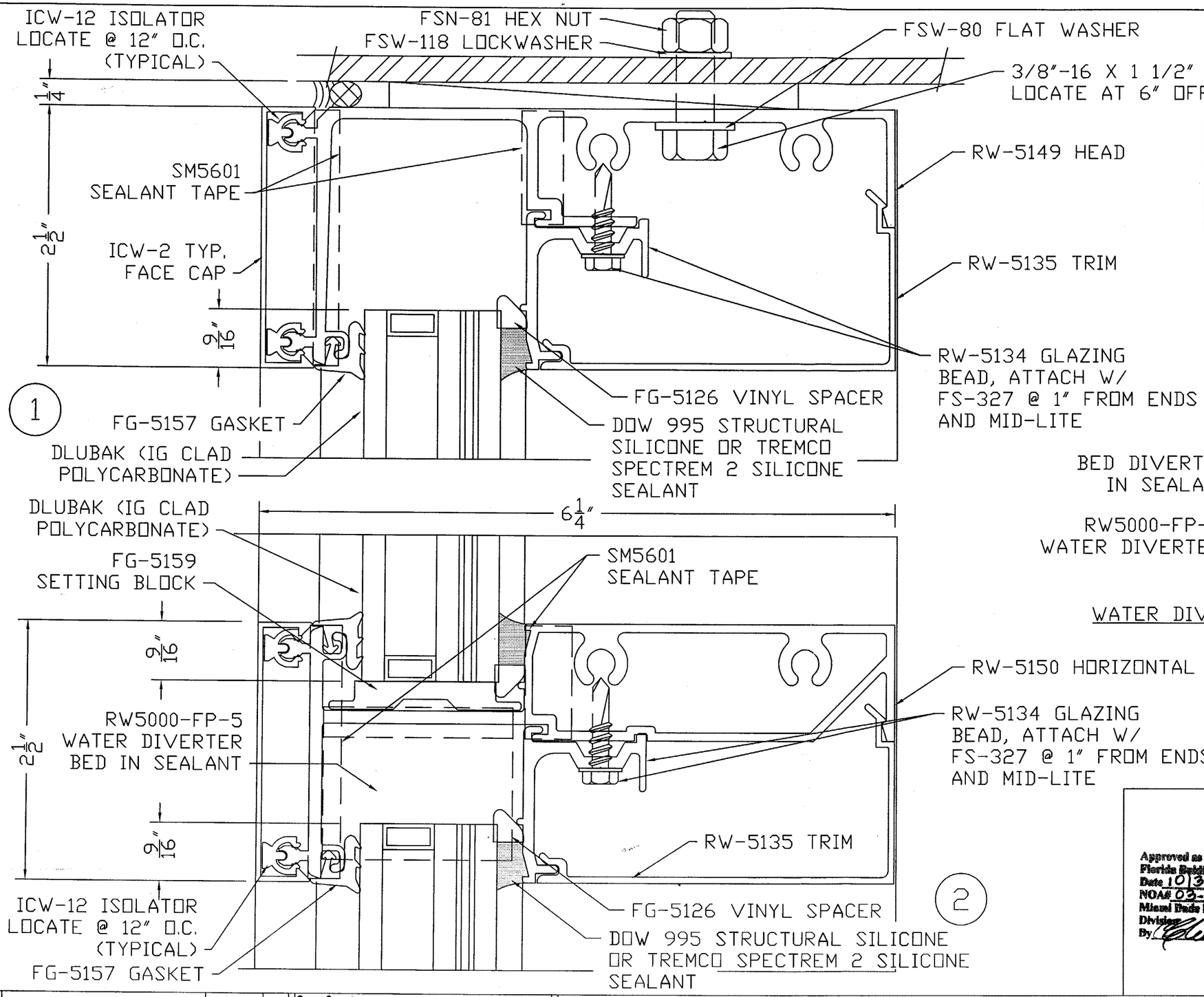

GLAZING NOTE:
REFERENCE SHEET 3 FOR GLASS SCHEDULE,AND SHEET 5 FOR GASKET AND GLAZING OPTIONS.
REFERENCE SHEET 7 FOR MULL CAP AND END DAM INSTALLATION.

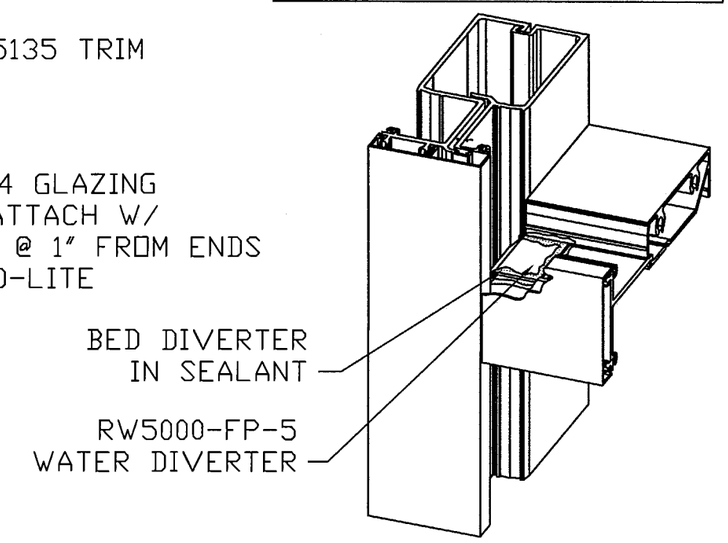

WATER DIVERTER SEALANT DETAIL

LOCATE AT EACH END OF INTERMEDIATE HORIZONTALS

Approved as complying with the Florida Building Code
Date 10/30/03
NOA# 03-0318.05
Miami Dade Product Control Division
By: [signature]

JUN 2 4 2003

NO.	REVISION	DATE	BY

VISTAWALL ARCHITECTURAL PRODUCTS
PRODUCT DEVELOPMENT GROUP

RW-5100 INSULATED IMPACT
RIBBON WINDOW SYSTEM

DATE 1/18/02
DRAWN BY JPC
DWG. NO. RW5100IMP

SHEET 3 OF 6

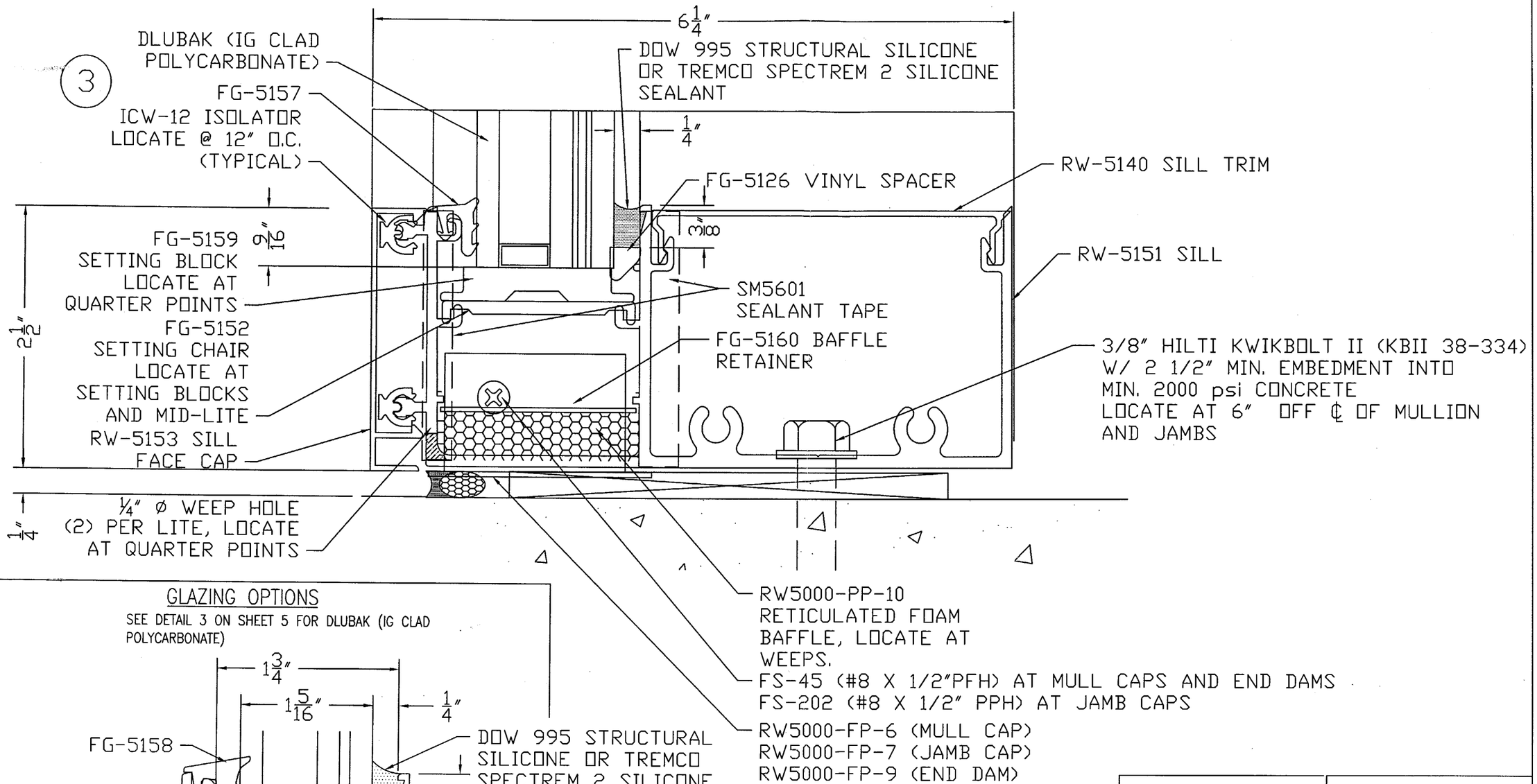

GLAZING OPTIONS

SEE DETAIL 3 ON SHEET 5 FOR DLUBAK (IG CLAD POLYCARBONATE)

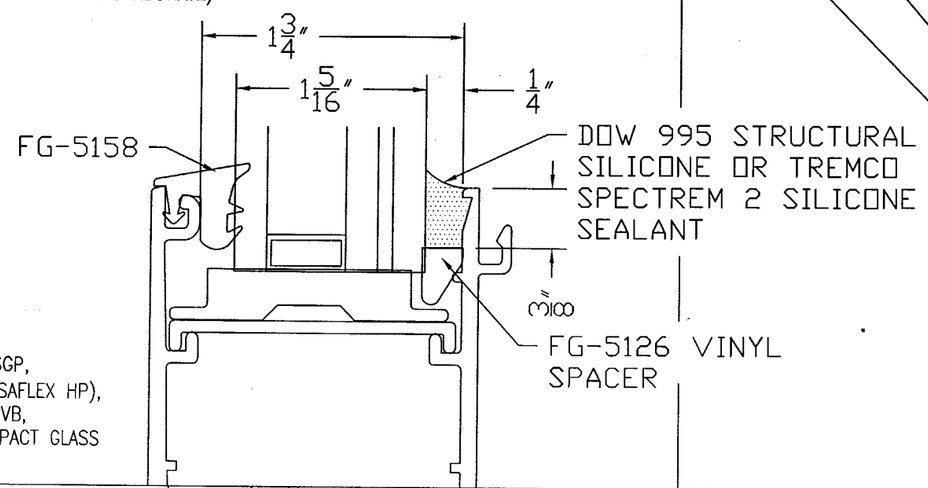

GLAZING FOR SGP, STORMGUARD (SAFLEX HP), .060 & .090 PVB, & SECURITY IMPACT GLASS

Approved as complying with the Florida Building Code
Date 10/30/03
NOA# 03-0718.05
Miami Dade Product Control Division
By [signature]

JUN 2 4 2003

NO.	REVISION	DATE	BY

VISTAWALL ARCHITECTURAL PRODUCTS
PRODUCT DEVELOPMENT GROUP

RW-5100 INSULATED IMPACT
RIBBON WINDOW SYSTEM

DATE 1/18/02
DRAWN BY JPC
DWG. NO. RW5100IMP

SHEET 4 OF 6

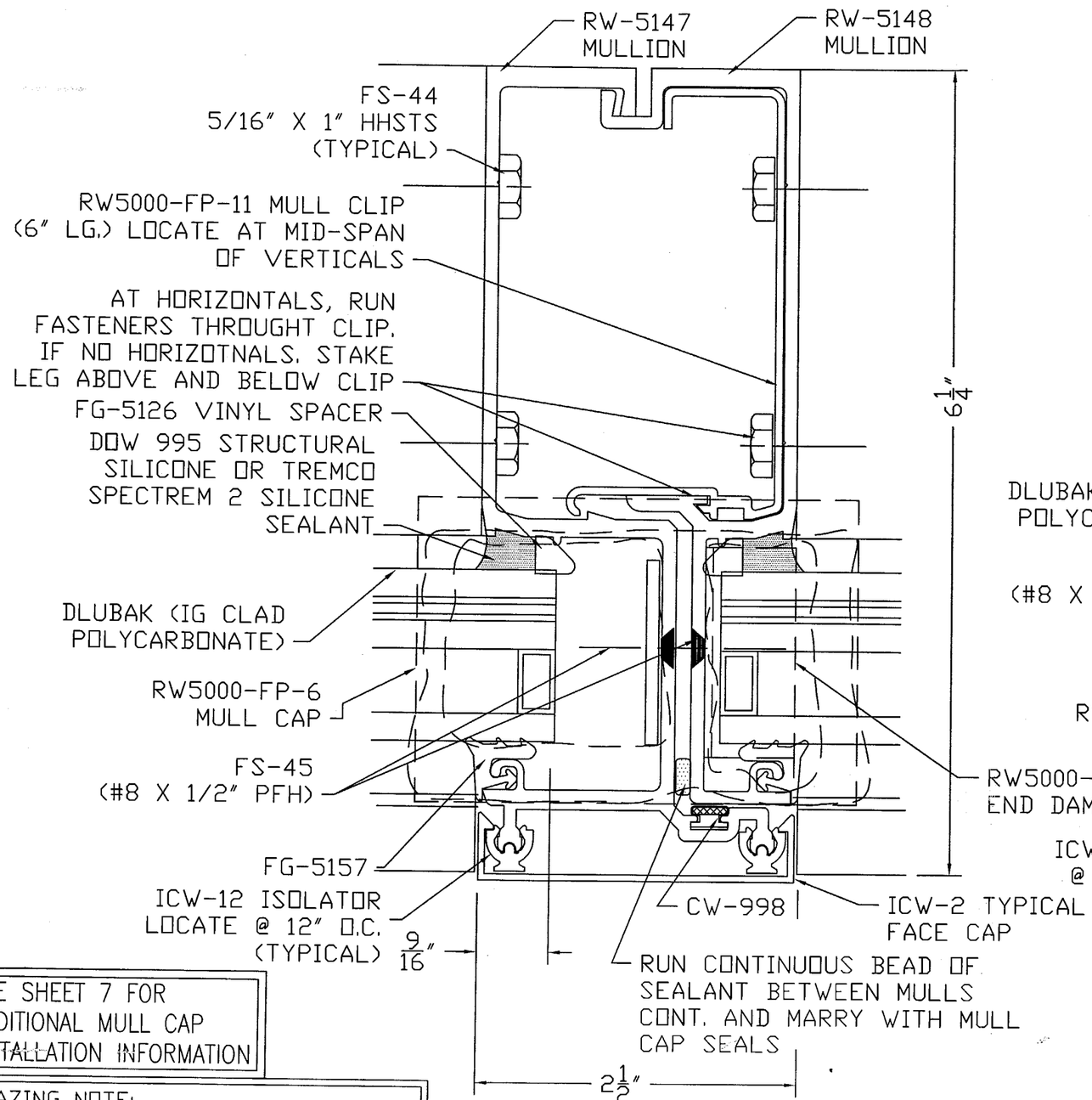

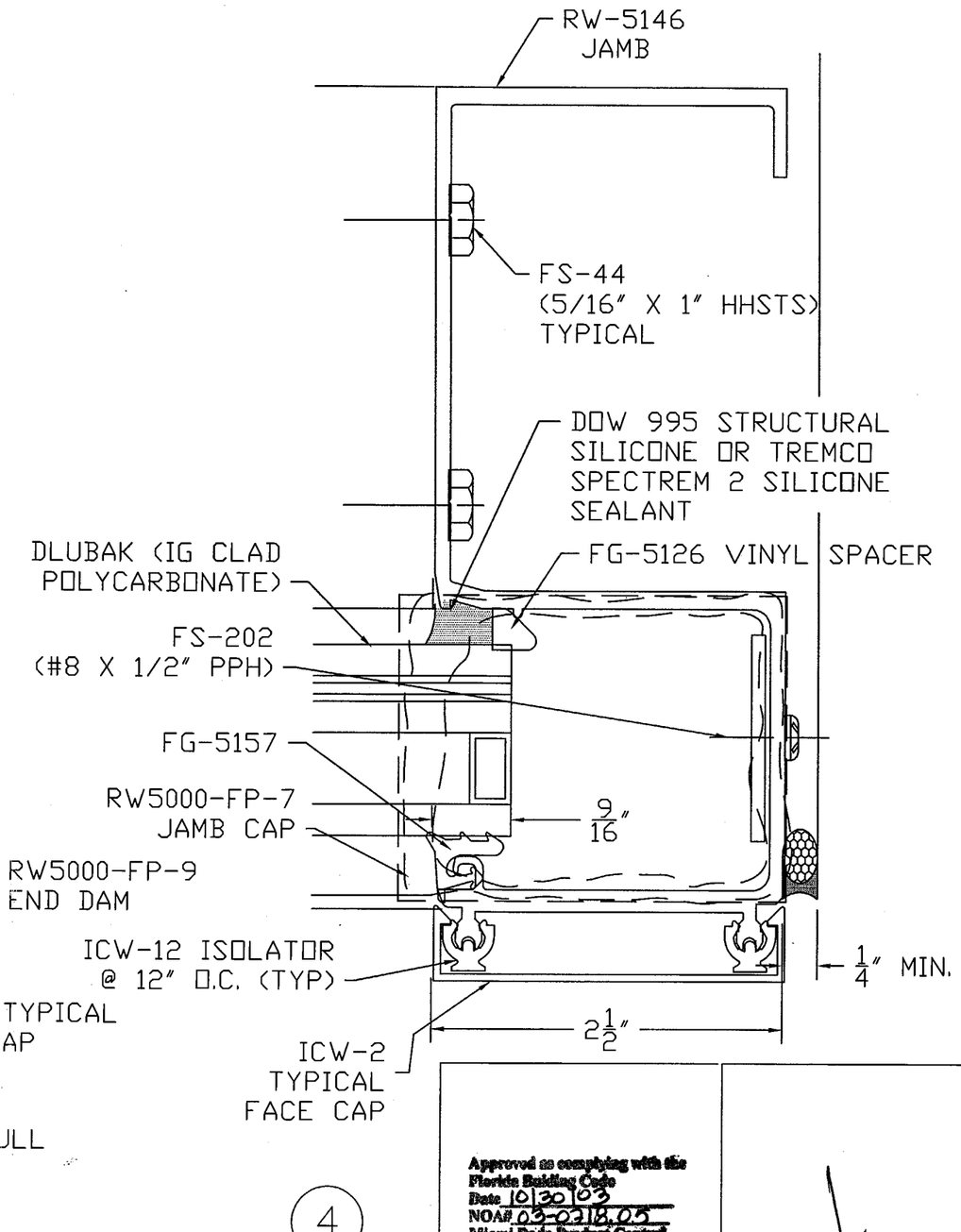

SEE SHEET 7 FOR
ADDITIONAL MULL CAP
INSTALLATION INFORMATION

GLAZING NOTE:
REFERENCE SHEET 3 FOR GLASS
SCHEDULE,AND SHEET 5 FOR GASKET
AND GLAZING OPTIONS.

Approved as complying with the
Florida Building Code
Date 10/30/03
NOA# 03-0718.05
Miami Dade Product Control
Division
By [signature]

JUN 2 4 2003

NO.	REVISION	DATE	BY

VISTAWALL
ARCHITECTURAL PRODUCTS
PRODUCT DEVELOPMENT GROUP

RW-5100 INSULATED IMPACT
RIBBON WINDOW SYSTEM

DATE 1/18/02
DRAWN BY JPC
DWG. NO. RW5100IMP

SHEET 5 OF 6

MULL CAP SEALANT DETAIL AND INSTALLATION INSTRUCTIONS

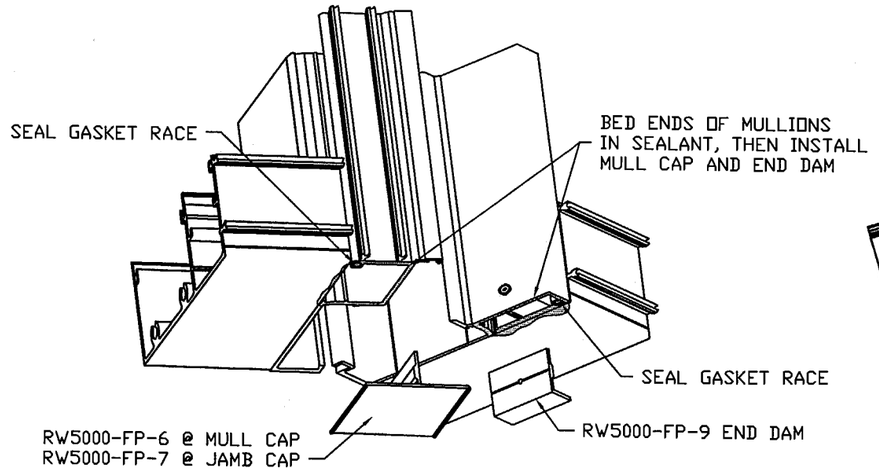

DETAIL A

MULL CAP & END DAMS REQUIRED AT HEAD AND SILL TYPICAL. (SILL SHOWN)

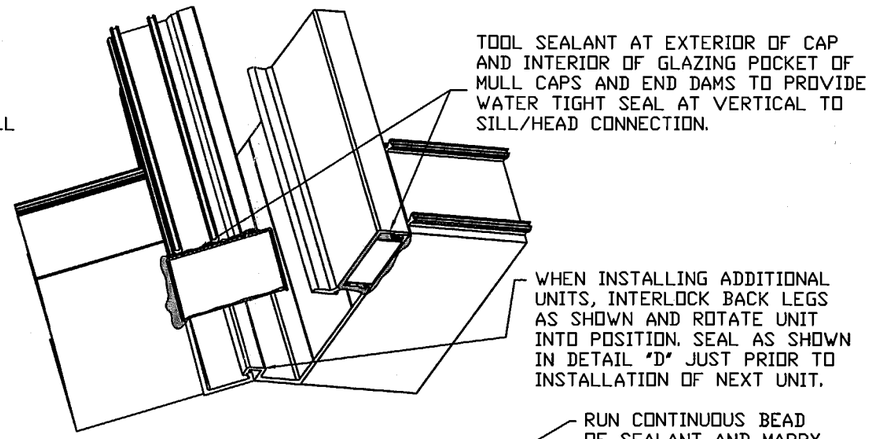

DETAIL C

INSTALL MULL CAPS AND END DAMS USING FS-45 (#8 X 1/2" PFH), INSTALL JAMB CAPS USING FS-202 (#8 X 1/2" PPH). (CAP SEAL ALL FASTENERS)

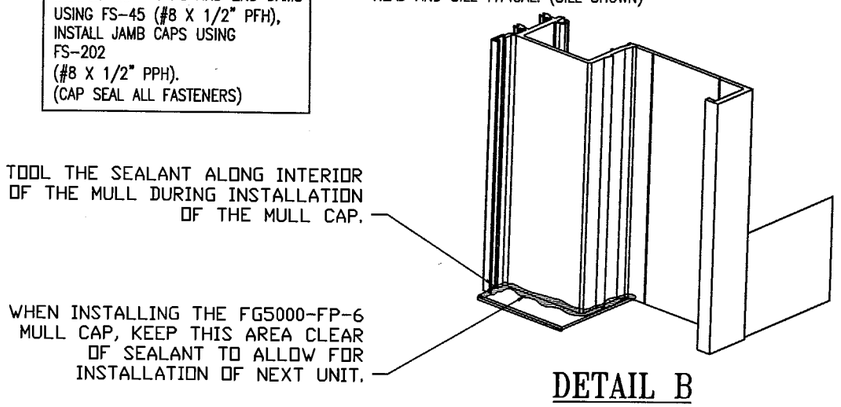

DETAIL B

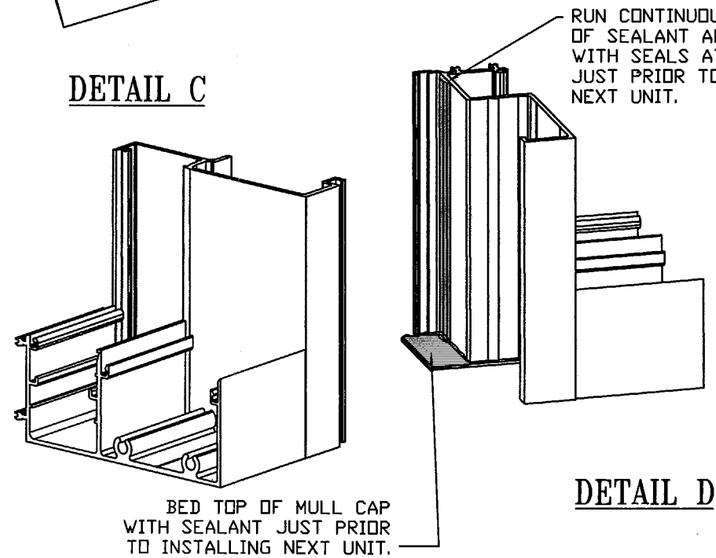

DETAIL D

INSTALLATION NOTES:

1) ASSEMBLE UNITS AS SHOWN ON DETAIL SHEETS 3 THRU 5. INSTALL SEALANT TAPE BETWEEN VERTICALS AND HORIZONTALS AS SHOWN.

2) INSTALL AND SEAL MULL CAPS AS SHOWN IN DETAILS A, B & C ABOVE.

3) MULL CAPS SHOULD FORM A WATER TIGHT SEAL. A TEST MAY BE CONDUCTED TO CONFIRM THIS SEAL BY BLOCKING WEEP HOLES AND FILLING SILL CAVITY WITH WATER. AFTER TEST REMOVE PLUGS FROM WEEP HOLES, DRAIN WATER, INSTALL BAFFLES AND BAFFLE RETAINERS.

4) INSTALL FIRST UNIT INTO OPENING (UNITS WILL INSTALL FROM LEFT TO RIGHT AS VIEWED FROM EXTERIOR OF BUILDING), LEVEL, PLUMB AND ANCHOR FIRST UNIT. WHEN SHIMMING UNITS, SHIM AT ANCHOR POINTS UNDER SILL. DO NOT PLACE SHIMS BENEATH MULL OR MULL CAP.

5) RUN BEAD OF SEALANT CONTINUOUS FOR FULL HEIGHT OF MULLION AND BED MULL CAP WITH SEALANT AT HEAD AND SILL AS SHOWN IN DETAIL D.

6) INSTALL SECOND UNIT BY BRINGING INTO POSITION FROM INSIDE OF BUILDING, TILT HEAD OF UNIT BENEATH MULL CAP, ROTATE SILL OF UNIT OVER LOWER MULL CAP, THEN INTERLOCK BACK LEGS OF MULLION (SEE DETAIL C), PLACE APPROPRIATE SHIMS BENEATH SILL MEMBER TO ALLOW FOR BETTER ALIGNMENT, AND ROTATE UNIT INTO PLACE. PLUMB AND ANCHOR.

7) REPEAT STEP 6 FOR ALL ADDITIONAL UNITS. MINIMUM 1/4" CAULK JOINT AT JAMB IS REQUIRED FOR INSTALLATION OF FINAL UNIT.

8) SYSTEM MAY BE INSTALLED EITHER IN UN-GLAZED OR PREGLAZED FRAMES. WHEN INSTALLING UNITS AS UN-GLAZED FRAMES FOLLOW INSTRUCTIONS 4 THRU 8 AND THEN INSTALL GLASS, NEXT PLACE AN 1/8" SHIM AT MID-HEIGHT OF MULL AND CLAMP BACK OF MULL AT THE SHIM BEFORE RUNNING WEDGE TO HELP INSURE PROPER ALIGNMENT OF MULLS AT FACE OF SYSTEM. WHEN PREGLAZING FRAMES, MAKE SURE THAT UNITS ARE SQUARE AND THAT DAY LIGHT OPENINGS ARE HELD TO PROPER DIMENSIONS BEFORE RUNNING STRUCTURAL SILICONE. (REFERENCE SILICONE MANUFACTURER FOR PROPER CLEANING AND USE OF SILICONE.)

Approved as complying with the Florida Building Code
Date 10/30/03
NOA# 03-0210.05
Miami Dade Product Control Division
By Claudia Berman

JUN 2 4 2003

NO.	REVISION	DATE	BY

VISTAWALL ARCHITECTURAL PRODUCTS
PRODUCT DEVELOPMENT GROUP

RW-5100 INSULATED IMPACT
RIBBON WINDOW SYSTEM

DATE 1/18/02
DRAWN BY JPC
DWG. NO. RW5100IMP

SHEET 6 OF 6