MIAMI-DADE

BUILDING CODE COMPLIANCE OFFICE (BCCO)
PRODUCT CONTROL DIVISION

MIAMI-DADE COUNTY, FLORIDA
METRO-DADE FLAGLER BUILDING
140 WEST FLAGLER STREET, SUITE 1603
MIAMI, FLORIDA 33130-1563
(305) 375-2901 FAX (305) 375-2908

NOTICE OF ACCEPTANCE (NOA)

Glass Tech Engineering, Inc.
8469 NW 70 Street
Miami, FL 33166

SCOPE:
This NOA is being issued under the applicable rules and regulations governing the use of construction materials. The documentation submitted has been reviewed by Miami-Dade County Product Control Division and accepted by the Board of Rules and Appeals (BORA) to be used in Miami Dade County and other areas where allowed by the Authority Having Jurisdiction (AHJ).

This NOA shall not be valid after the expiration date stated below. The Miami-Dade County Product Control Division (In Miami Dade County) and/or the AHJ (in areas other than Miami Dade County) reserve the right to have this product or material tested for quality assurance purposes. If this product or material fails to perform in the accepted manner, the manufacturer will incur the expense of such testing and the AHJ may immediately revoke, modify, or suspend the use of such product or material within their jurisdiction. BORA reserves the right to revoke this acceptance, if it is determined by Miami-Dade County Product Control Division that this product or material fails to meet the requirements of the applicable building code.

This product is approved as described herein, and has been designed to comply with the High Velocity Hurricane Zone of the Florida Building Code.

DESCRIPTION: Series 2046 Aluminum Window Wall System – Large Missile Impact

APPROVAL DOCUMENT: Drawing No. **96-26**, titled "Series: 2046 Impact Window Wall System", sheets 1 through 6 of 6, dated 6/15/96 with revision on 11/23/02, prepared by Al Farooq Corporation, signed and sealed by Humayoun Farooq, P.E., bearing the Miami-Dade County Product Control Renewal stamp with the Notice of Acceptance number and expiration date by the Miami-Dade County Product Control Division.

MISSILE IMPACT RATING: Large and Small Missile Impact

LABELING: Each unit shall bear a permanent label with the manufacturer's name or logo, city, state and following statement: "Miami-Dade County Product Control Approved", unless otherwise noted herein.

RENEWAL of this NOA shall be considered after a renewal application has been filed and there has been no change in the applicable building code negatively affecting the performance of this product.

TERMINATION of this NOA will occur after the expiration date or if there has been a revision or change in the materials, use, and/or manufacture of the product or process. Misuse of this NOA as an endorsement of any product, for sales, advertising or any other purposes shall automatically terminate this NOA. Failure to comply with any section of this NOA shall be cause for termination and removal of NOA.

ADVERTISEMENT: The NOA number preceded by the words Miami-Dade County, Florida, and followed by the expiration date may be displayed in advertising literature. If any portion of the NOA is displayed, then it shall be done in its entirety.

INSPECTION: A copy of this entire NOA shall be provided to the user by the manufacturer or its distributors and shall be available for inspection at the job site at the request of the Building Official.
This NOA **renews NOA # 02-0328.01** and consists of this page 1 as well as approval document mentioned above.
The submitted documentation was reviewed by **Manuel Perez, P.E.**

PRODUCT CONTROL ACCEPTED

Glass Tech Engineering, Inc.

NOTICE OF ACCEPTANCE: EVIDENCE SUBMITTED
(For File ONLY. Not part of NOA)

A. DRAWINGS

1. Manufacturer's die drawings and sections.
2. Drawing No. **96-26**, titled "Series: 2046 Impact Window Wall System", sheets 1 through 6 of 6, dated 6/15/96 with revision E dated 11/23/02, prepared by Al Farooq Corporation, signed and sealed by Humayoun Farooq, P.E.

B. TESTS

(Submitted under NOA#02-0328.01)

1. Test reports on 1) Large Missile Impact Test per FBC, TAS 201-94
   2) Cyclic Wind Pressure Loading per FBC, TAS 203-94
   along with marked-up drawings and installation diagram of 1 specimen of a series 2046 aluminum window wall system with lam. glass composed of two lites of ¼" HS glass, prepared by Fenestration Testing Laboratory, Inc., Test Report No. **FTL-3358**, dated February 13, 2002, signed and sealed by Luis A. Figueredo, P.E.
2. Test reports on 1) Large Missile Impact Test per FBC, TAS 201-94
   2) Cyclic Wind Pressure Loading per FBC, TAS 203-94
   along with marked-up drawings and installation diagram of a series 2046 aluminum window wall system with lam. glass composed of two lites of ¼" annealed glass,, prepared by Fenestration Testing Laboratory, Inc., Test Report No. **FTL-3370**, dated February 14, 2002, signed and sealed by Luis A. Figueredo, P.E.

(Submitted under NOA#00-0524.03)

3. Test reports on 1) Air Infiltration Test, per FBC, TAS 202-94
   2) Uniform Static Air Pressure Test, Loading per FBC, TAS 202-94
   3) Water Resistance Test, per FBC, TAS 202-94
   4) Large Missile Impact Test per FBC, TAS 201-94
   5) Cyclic Wind Pressure Loading per FBC, TAS 203-94
   along with marked-up drawings and installation diagram of a series 2046 aluminum window wall system, prepared by Fenestration Testing Laboratory, Inc., Test Report No. **FTL-1492**, dated October 3, 1996, signed and sealed by Gil Diamond, P.E.

C. CALCULATIONS

Submitted under NOA#02-0328.01

1. Anchor Calculations and structural analysis, dated 8/14/02, prepared by Al-Farooq Corporation, signed and sealed by Humayoun Farooq, P.E.

Manuel Perez, P.E.
Product Control Examiner
NOA No 03-0723.01
Expiration Date: September 11, 2008
Approval Date: August 29, 2003

Glass Tech Engineering, Inc.

NOTICE OF ACCEPTANCE: EVIDENCE SUBMITTED
(For File ONLY. Not part of NOA)

D. MATERIAL CERTIFICATIONS

1. Notice of Acceptance No. **99-0302.04** issued to UBC Chemicals Corporation for their "Uvekol – Liq. Resin to Adhere Glass" dated 02/08/01, expiring on 02/08/04.

E. STATEMENTS

1. Statement letter of no change, dated 6/11/03, issued by Glass Tech Engineering, Inc., signed by Ramon Perez.
2. Statement letter, dated 6/19/03, issued by Al-Farooq Corporation, advising that engineer is still in practice, signed and sealed by Dr. Humayoun Farooq, P.E.

F. OTHER

1. Notice of Acceptance No. **02-0328.01** issued to Glass Tech Engineering, Inc., for their Series: 2046 Aluminum Window Wall System – Large Missile Impact, approved on 12/26/02 and expiring on 9/11/03.

Manuel Perez, P.E.
Product Control Examiner
NOA No 03-0723.01
Expiration Date: September 11, 2008
Approval Date: August 29, 2003

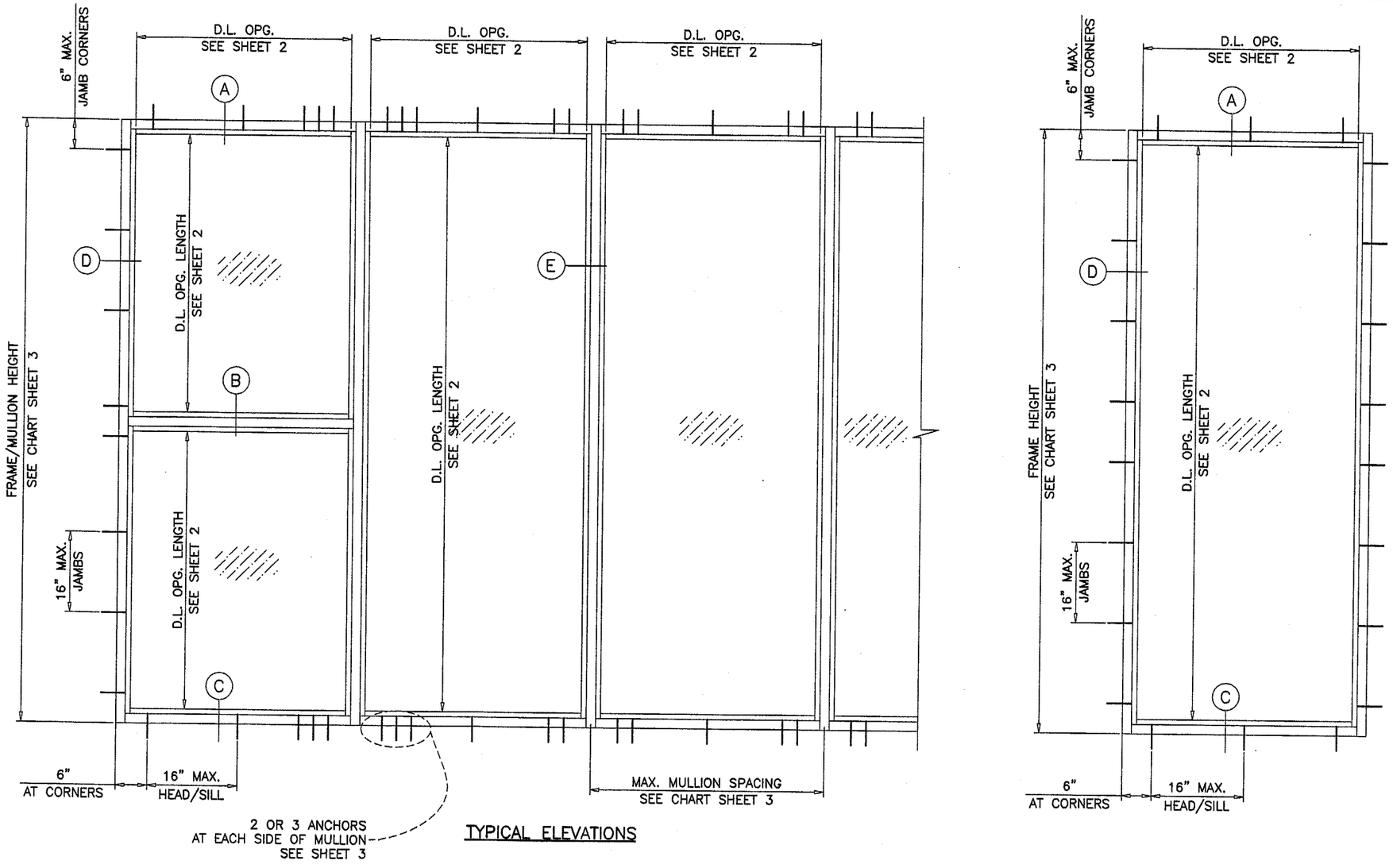

TYPICAL ELEVATIONS

NOTE: FOR SPECIFIC INSTALLATIONS

CHECK AND HIGHLIGHT GLASS SELECTION FROM TABLES ON SHEET 2 AND MULLION AND ANCHOR CAPACITIES FROM TABLES ON SHEET 3.

THE LOWEST OF THE HIGHLIGHTED VALUES WILL DETERMINE THE DESIGN LOAD RATING OF THE SPECIFIC CONDITION SELECTED.

FOR 'O' PANELS CONSULT GLASS TABLES ON SHEET 2 AND USE ANCHOR SPACING AS SHOWN ON ELEVATION AT RIGHT.

SERIES-2046 IMPACT WINDOW WALL SYSTEM

STOREFRONT SYSTEM IS RATED FOR LARGE MISSILE IMPACT. SHUTTERS ARE NOT REQUIRED.

CODE REQUIREMENTS FOR SAFEGUARDS MUST BE OBSERVED.

SEE SHEET 3 TO DETERMINE THE CAPACITY OF ANCHOR OPTIONS.

NOTES:

1. THIS PRODUCT IS DESIGNED TO COMPLY WITH THE HIGH VELOCITY HURRICANE ZONE OF THE 2001 FLORIDA BUILDING CODE. ALSO FOR WIND LOADS AS PER ASCE 7-88, ASCE 7-93, ASCE 7-95 OR ASCE 7-98 AS REQUIRED BY PREVAILING BUILDING CODE.
2. WOOD BUCKS BY OTHERS, MUST BE ANCHORED PROPERLY TO TRANSFER LOADS TO THE STRUCTURE.
3. ANCHORS SHALL BE AS LISTED, SPACED AS SHOWN ON DETAILS. ANCHOR EMBEDMENT TO BASE MATERIAL SHALL BE BEYOND WALL DRESSING OR STUCCO.
4. ALL STEEL IN CONTACT WITH ALUMINUM TO BE PAINTED OR PLATED.

Engr: DR. HUMAYOUN FAROOQ
STRUCTURES
FLA. PE # 16557
C.A.N. 3538

NOV 26 2002

PRODUCT RENEWED
as complying with the Florida Buiding Code
Acceptance No. 03-0723.01
Expiration Date SEPT. 11, 2008
By Manuel Perez
Miami-Dade Product Control Division

Approved as complying with the Florida Buiding Code
Date DEC. 26, 2002
NOA# 02-0328.01
Miami Dade Product Control Division
By Manuel Perez

AL-FAROOQ CORPORATION
ENGINEERS, PLANNERS & PRODUCT DESIGN
1235 SW 87 AVE
MIAMI, FLORIDA 33174
TEL. (305) 264-8100 FAX. (305) 262-6978
STORE\96-26GTE

SERIES-2046 IMPACT WINDOW WALL SYSTEM

GLASSTECH ENGINEERING INC.
8465 N.W. 70TH STREET
MIAMI, FL. 33166
TEL. (305) 594-4321

revisions:

no	date	by	description
A	10.9.96	H	COMPLETE REVISION
B	7.15.97	H	GENERAL REVISION
C	8.10.00	H	REV. AS PER BCCO COMMENTS
D	07.08.02	H	GENERAL REVISION
E	11.23.02	H	REV. PER BCCO COMMENTS

date: 06-15-96
scale: 1/2"=1'-0"
dr. by: HAMID
chk. by:

drawing no.
96-26

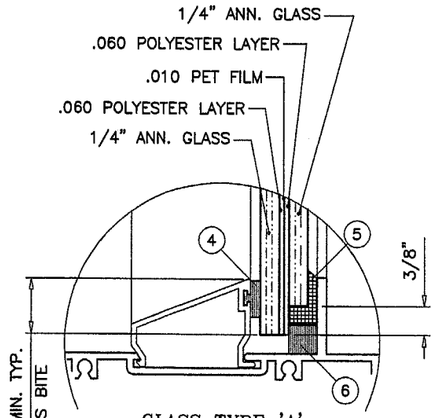

GLASS TYPE 'A'
9/16" OVERALL SAFETY-PLUS
LAMINATED BY
BY GLASSLAM N.G.I. INC.

GLASS DESIGN LOAD CAPACITY – PSF		
NOMINAL DIMS.		GLASS TYPE 'A'
D.L.O. WIDTH	D.L.O. LENGTH	EXT.(+) & INT.(–)
24"	78"	85.0
30"		85.0
36"		85.0
42"		78.2
48"		66.7
54"		58.3
60"		52.2
24"	84"	85.0
30"		85.0
36"		85.0
42"		76.5
48"		62.4
54"		54.4
24"	90"	85.0
30"		85.0
36"		85.0
42"		72.0
48"		58.6
54"		50.8
24"	96"	85.0
30"		85.0
36"		85.0
42"		68.0
48"		56.9
24"	102"	85.0
30"		85.0
36"		84.4
42"		64.5
48"		53.5
24"	108"	85.0
30"		85.0
36"		85.0
42"		64.2
24"	114"	85.0
30"		85.0
36"		82.4
42"		61.3
24"	120"	85.0
30"		85.0
36"		79.3

GLASS DESIGN LOAD CAPACITY – PSF		
NOMINAL DIMS.		GLASS TYPE 'B'
D.L.O. WIDTH	D.L.O. LENGTH	EXT.(+) & INT.(–)
24"	30"	85.0
30"		85.0
36"		85.0
42"		85.0
48"		85.0
54"		85.0
60"		85.0
66"		85.0
72"		85.0
24"	36"	85.0
30"		85.0
36"		85.0
42"		85.0
48"		85.0
54"		85.0
60"		85.0
66"		85.0
24"	42"	85.0
30"		85.0
36"		85.0
42"		85.0
48"		85.0
54"		85.0
24"	48"	85.0
30"		85.0
36"		85.0
42"		85.0
48"		85.0
24"	54"	85.0
30"		85.0
36"		85.0
42"		85.0
24"	60"	85.0
30"		85.0
36"		85.0
24"	66"	85.0
30"		85.0
36"		85.0
24"	72"	85.0
30"		85.0
24"	78"	85.0
30"		85.0
24"	84"	85.0
24"	90"	85.0
24"	96"	85.0

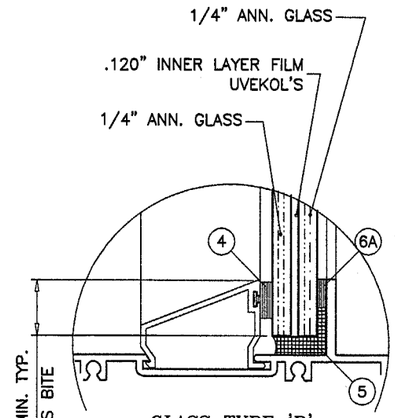

GLASS TYPE 'B'
.560" OVERALL GLASS
LAMINATED BY
BY GLASS TECH ENGR. INC.

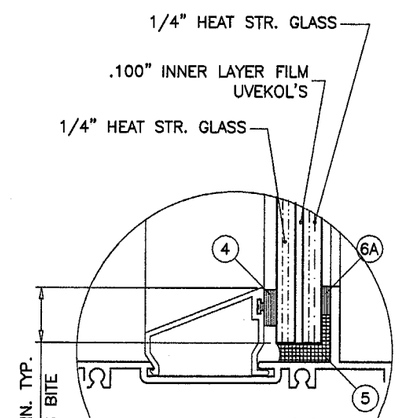

GLASS TYPE 'C'
.550" OVERALL GLASS
LAMINATED BY
BY GLASS TECH ENGR. INC.

GLASS DESIGN LOAD CAPACITY – PSF		
NOMINAL DIMS.		GLASS TYPE 'C'
D.L.O. WIDTH	D.L.O. LENGTH	EXT.(+) & INT.(–)
24"	78"	100.0
30"		100.0
36"		100.0
42"		100.0
48"		100.0
54"		100.0
60"		100.0
24"	84"	100.0
30"		100.0
36"		100.0
42"		100.0
48"		100.0
54"		100.0
24"	90"	100.0
30"		100.0
36"		100.0
42"		100.0
48"		100.0
54"		100.0
24"	96"	100.0
30"		100.0
36"		100.0
42"		100.0
48"		100.0
24"	102"	100.0
30"		100.0
36"		100.0
42"		100.0
48"		100.0
24"	108"	100.0
30"		100.0
36"		100.0
42"		100.0
24"	114"	100.0
30"		100.0
36"		100.0
42"		100.0
24"	120"	100.0
30"		100.0
36"		100.0

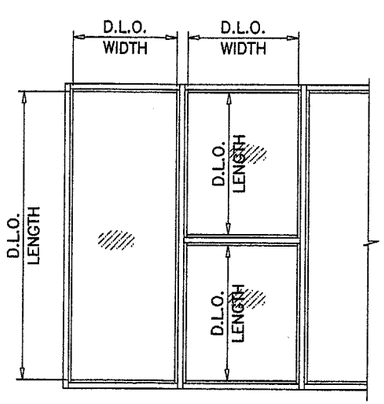

VALUES SHOWN ABOVE ARE MAXIMUM
DAYLITE OPENING DIMS. FOR GLASS.
SEE MULLION CHARTS FOR MULLION CAPACITY.

GLASS CHARTS

Engr: DR. HUMAYOUN FAROOQ
STRUCTURES
FLA. PE # 16557
C.A.N. 3538

NOV 26 2002

PRODUCT RENEWED
as complying with the Florida
Buiding Code
Acceptance No 03-0723.01
Expiration Date SEPT 11, 2008
By Manuel Perez
Miami Dade Product Control
Division

Approved as complying with the
Florida Buiding Code
Date DEC. 26, 2002
NOA# 02-0328.01
Miami Dade Product Control
Division
By Manuel Perez

AL-FAROOQ CORPORATION
ENGINEERS, PLANNERS & PRODUCT DESIGN
1235 SW 87 AVE
MIAMI, FLORIDA 33174
TEL. (305) 264-8100 FAX. (305) 262-6978

STORE\96-26GTE

SERIES-2046 IMPACT WINDOW WALL SYSTEM

GLASSTECH ENGINEERING INC.
8465 N.W. 70TH STREET
MIAMI, FL. 33166
TEL. (305) 594-4321

revisions:

no	date	by	description
E	11.23.02	H	REV. PER BOCO COMMENTS

date: 06-15-96
scale: 1/2" = 1"
dr. by: HAMID
chk. by:

drawing no.
96-26

MULLION LOAD CAPACITY – PSF

NOMINAL DIMS.		MULLION
WIDTH (W)	FRAME HEIGHT	EXT.(+) & INT.(–)
39"	84"	100.0
42"		100.0
45"		100.0
48"		100.0
51"		100.0
54"		100.0
57"		100.0
60"		97.1
63"		92.5
66"		88.3
39"	90"	100.0
42"		100.0
45"		100.0
48"		100.0
51"		100.0
54"		100.0
57"		95.4
60"		90.7
63"		86.3
39"	96"	100.0
42"		100.0
45"		100.0
48"		100.0
51"		100.0
54"		94.4
57"		89.5
60"		85.0
39"	102"	100.0
42"		100.0
45"		100.0
48"		100.0
51"		94.1
54"		88.9
39"	108"	100.0
42"		100.0
45"		100.0
48"		94.4
51"		88.9
39"	114"	100.0
42"		100.0
45"		95.4
48"		89.5
39"	120"	100.0
42"		97.1
45"		90.7
48"		85.0
39"	126"	90.4
42"		83.9
45"		78.3
39"	132"	78.6
42"		73.0
39"	138"	68.8

TO VERIFY GLASS CAPACITY SEE GLASS CHARTS ON SHEET 2.

MULLION CAPACITY CHARTS

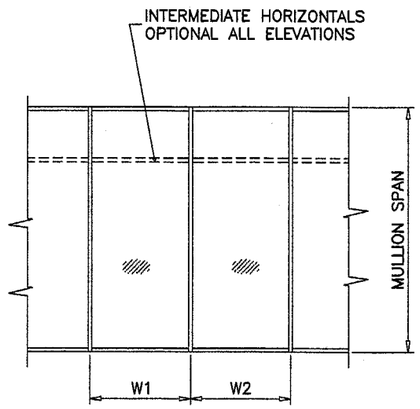

$$\text{WIDTH (W)} = \frac{W1 + W2}{2}$$

ANCHOR DESIGN LOAD CAPACITY – PSF EXTERIOR (+) AND INTERIOR (–)

NOMINAL DIMS.		OPTION #1	OPTION #2	OPTION #3
WIDTH (W)	FRAME HEIGHT			
39"	84"	95.3	100.0	100.0
42"		88.5	100.0	100.0
45"		82.6	100.0	100.0
48"		77.4	100.0	100.0
51"		72.9	100.0	100.0
54"		68.8	100.0	100.0
57"		65.2	97.8	100.0
60"		61.9	92.9	100.0
63"		59.0	88.5	100.0
66"		56.3	84.5	100.0
39"	90"	88.9	100.0	100.0
42"		82.6	100.0	100.0
45"		77.1	100.0	100.0
48"		72.3	100.0	100.0
51"		68.0	100.0	100.0
54"		64.2	96.4	100.0
57"		60.9	91.3	100.0
60"		57.8	86.7	100.0
63"		55.1	82.6	100.0
39"	96"	83.4	100.0	100.0
42"		77.4	100.0	100.0
45"		72.3	100.0	100.0
48"		67.8	100.0	100.0
51"		63.8	95.6	100.0
54"		60.2	90.3	100.0
57"		57.1	85.6	100.0
60"		54.2	81.3	100.0
39"	102"	78.5	100.0	100.0
42"		72.9	100.0	100.0
45"		68.0	100.0	100.0
48"		63.8	95.6	100.0
51"		60.0	90.0	100.0
54"		56.7	85.0	100.0
39"	108"	74.1	100.0	100.0
42"		68.8	100.0	100.0
45"		64.2	96.4	100.0
48"		60.2	90.3	100.0
51"		56.7	85.0	100.0
39"	114"	70.2	100.0	100.0
42"		65.2	97.8	100.0
45"		60.9	91.3	100.0
48"		57.1	85.6	100.0
39"	120"	66.7	100.0	100.0
42"		61.9	92.9	100.0
45"		57.8	86.7	100.0
48"		54.2	81.3	100.0
39"	126"	63.5	95.3	100.0
42"		59.0	88.5	100.0
45"		55.1	82.6	100.0
39"	132"	60.6	91.0	100.0
42"		56.3	84.5	100.0
39"	138"	58.0	87.0	100.0

ANCHOR CHARTS

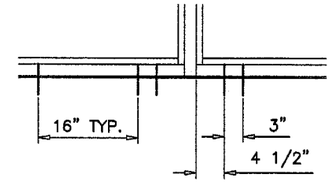

OPTION #1
(2) ANCHORS TYPE 'A'
AT EACH SIDE OF MULLION

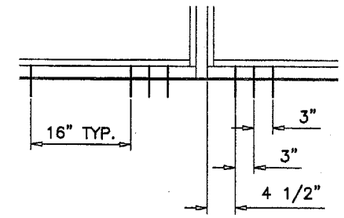

OPTION #2
(3) ANCHORS TYPE 'A'
AT EACH SIDE OF MULLION

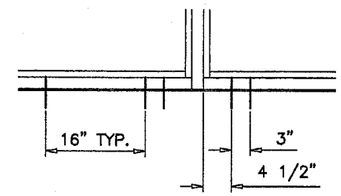

OPTION #3
(2) ANCHORS TYPE 'B' OR 'C'
AT EACH SIDE OF MULLION

TYPICAL ANCHORS: SEE ELEV. FOR SPACING

TYPE 'A'– 1/4" TAPCONS
INTO WOOD STRUCTURES
1–3/4" MIN. PENETRATION INTO WOOD

THRU WOOD BUCKS INTO MASONRY
1–1/4" MIN. EMBED INTO CONC. OR MASONRY

TYPE 'B'– 1/4" TAPCONS
DIRECTLY INTO MASONRY
1–1/2" MIN. EMBED INTO CONC. OR MASONRY

TYPE 'C'– #14 SMS OR 1/4" SELF DRILLING SCREWS
INTO METAL STRUCTURES (STEEL OR ALUMINUM 1/8" MIN. THICK.)
STEEL : Fy = 36 KSI MIN.
ALUMINUM : 6063–T5 MIN.
(STEEL IN CONTACT WITH ALUMINUM TO BE PLATED OR PAINTED)

PRODUCT RENEWED
as complying with the Florida
Buiding Code
Acceptance No. 03-0723.01
Expiration Date SEP. 11, 2008
By Manuel Perez
Miami Dade Product Control
Division

Engr: DR. HUMAYOUN FAROOQ
STRUCTURES
FLA. PE # 16557
C.A.N. 3538
NOV 26 2002

Approved as complying with the
Florida Buiding Code
Date DEC. 26, 2002
NOA# 02-0328.01
Miami Dade Product Control
Division
By Manuel Perez

AL-FAROOQ CORPORATION
ENGINEERS, PLANNERS & PRODUCT DESIGN
1235 SW 87 AVE
MIAMI, FLORIDA 33174
TEL. (305) 264-8100 FAX. (305) 262-6978

STORE\96-26GTE

SERIES-2046 IMPACT WINDOW WALL SYSTEM

GLASSTECH ENGINEERING INC.
8465 N.W. 70TH STREET
MIAMI, FL. 33166
TEL. (305) 594-4321

revisions:

no	date	by	description
E	11.23.02	H	REV. PER BCCO COMMENTS

date: 06-15-96
scale: 1/2" = 1"
dr. by: HAMID
chk. by:

drawing no. 96-26

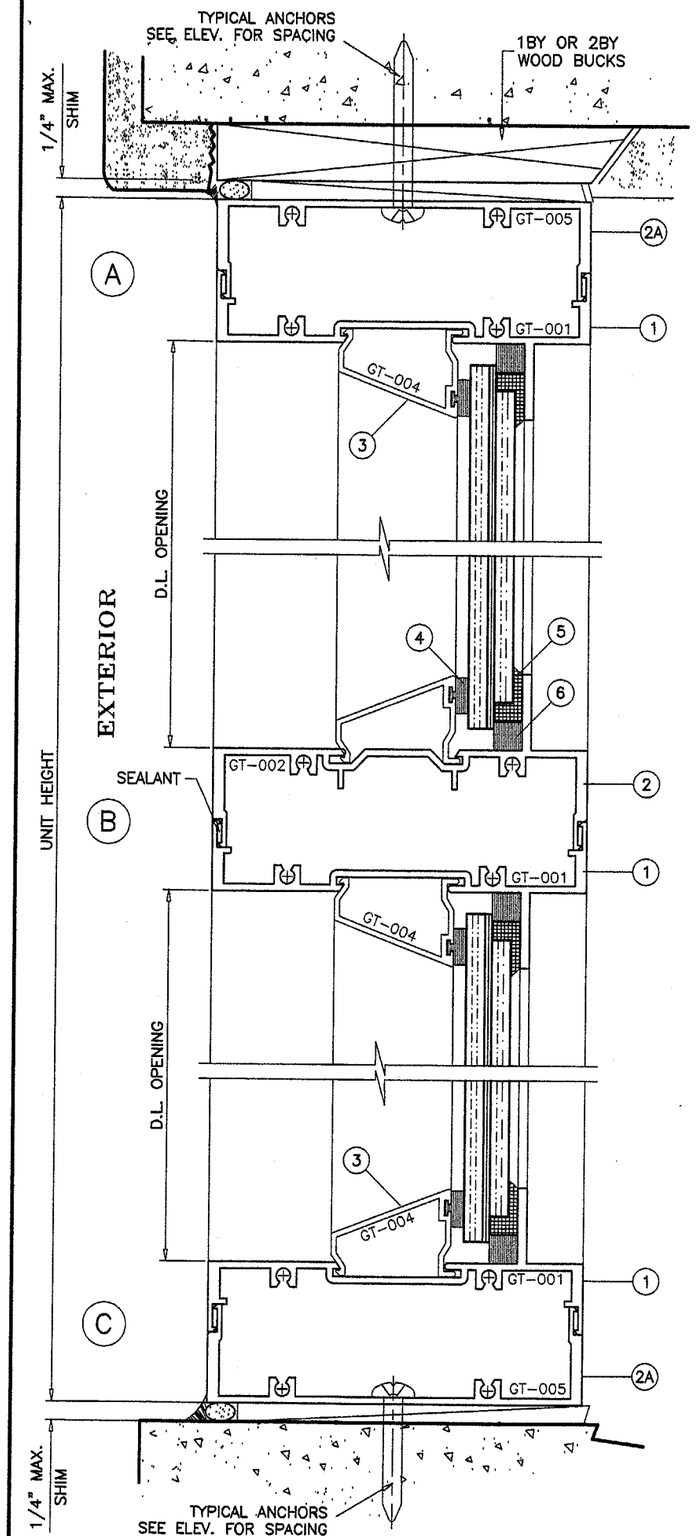

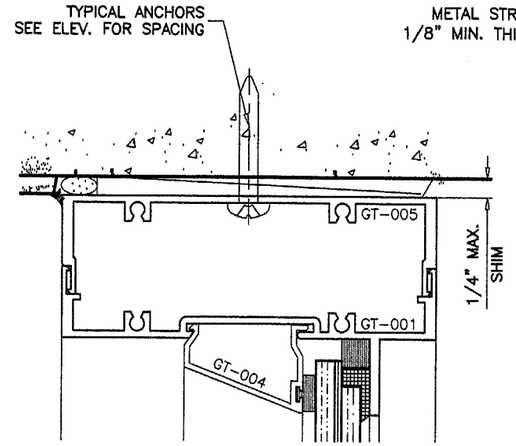

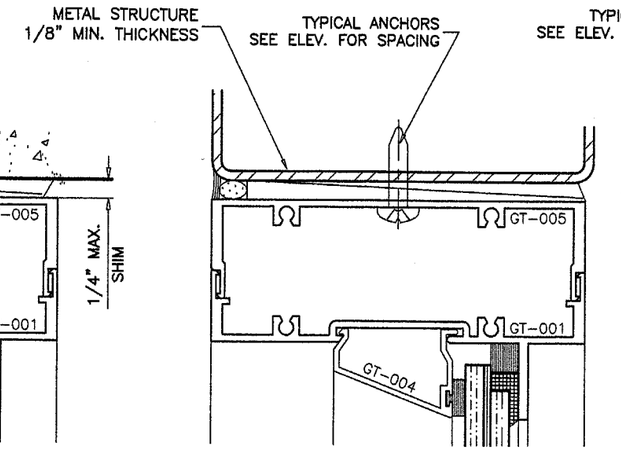

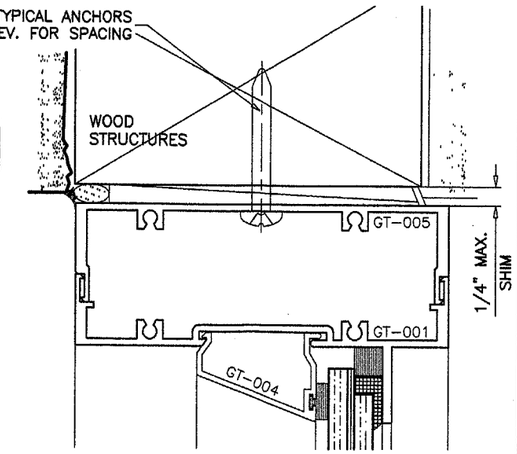

WOOD BUCKS NOT BY GLASS TECH, MUST SUPPORT LOADS IMPOSED BY GLAZING SYSTEM AND TRANSFER THEM TO THE BUILDING STRUCTURE.

TYPICAL ANCHORS: SEE ELEV. FOR SPACING

TYPE 'A'– 1/4" TAPCONS
INTO WOOD STRUCTURES
1–3/4" MIN. PENETRATION INTO WOOD

THRU WOOD BUCKS INTO MASONRY
1–1/4" MIN. EMBED INTO CONC. OR MASONRY

TYPE 'B'– 1/4" TAPCONS
DIRECTLY INTO MASONRY
1–1/2" MIN. EMBED INTO CONC. OR MASONRY

TYPE 'C'– #14 SMS OR 1/4" SELF DRILLING SCREWS
INTO METAL STRUCTURES (STEEL OR ALUMINUM 1/8" MIN. THICK.)
STEEL : Fy = 36 KSI MIN.
ALUMINUM : 6063–T5 MIN.
(STEEL IN CONTACT WITH ALUMINUM TO BE PLATED OR PAINTED)

SEALANTS:

PERIMETER OF GLAZING BEADS TO FRAME AND MULLION SEAMS TO BE SEALED WITH GE 1200 SEALANT ON EXTERIOR ONLY.

PRODUCT RENEWED
as complying with the Florida
Buiding Code
Acceptance No 03-0723.01
Expiration Date SEPT. 11, 2008
By Manuel Perez
Miami Dade Product Control
Division

Engr: DR. HUMAYOUN FAROOQ
STRUCTURES
FLA. PE # 16557
C.A.N. 3538

NOV 26 2002

Approved as complying with the
Florida Buiding Code
Date DEC. 26, 2002
NOA# 02-0328.01
Miami Dade Product Control
Division
By Manuel Perez

AL-FAROOQ CORPORATION
ENGINEERS, PLANNERS & PRODUCT DESIGN
1235 SW 87 AVE
MIAMI, FLORIDA 33174
TEL. (305) 264-8100 FAX. (305) 262-6978

STORE\96-26GTE

SERIES–2046 IMPACT WINDOW WALL SYSTEM

GLASSTECH ENGINEERING INC.
8465 N.W. 70TH STREET
MIAMI, FL. 33166
TEL. (305) 594-4321

revisions:

no	date	by	description
E	11.23.02	H	NO CHANGE

date: 06–15–96
scale: 1/2" = 1"
dr. by: HAMID
chk. by:

drawing no.
96–26

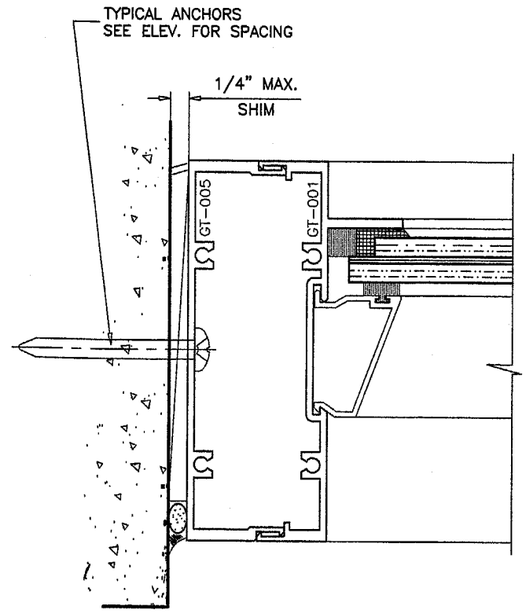

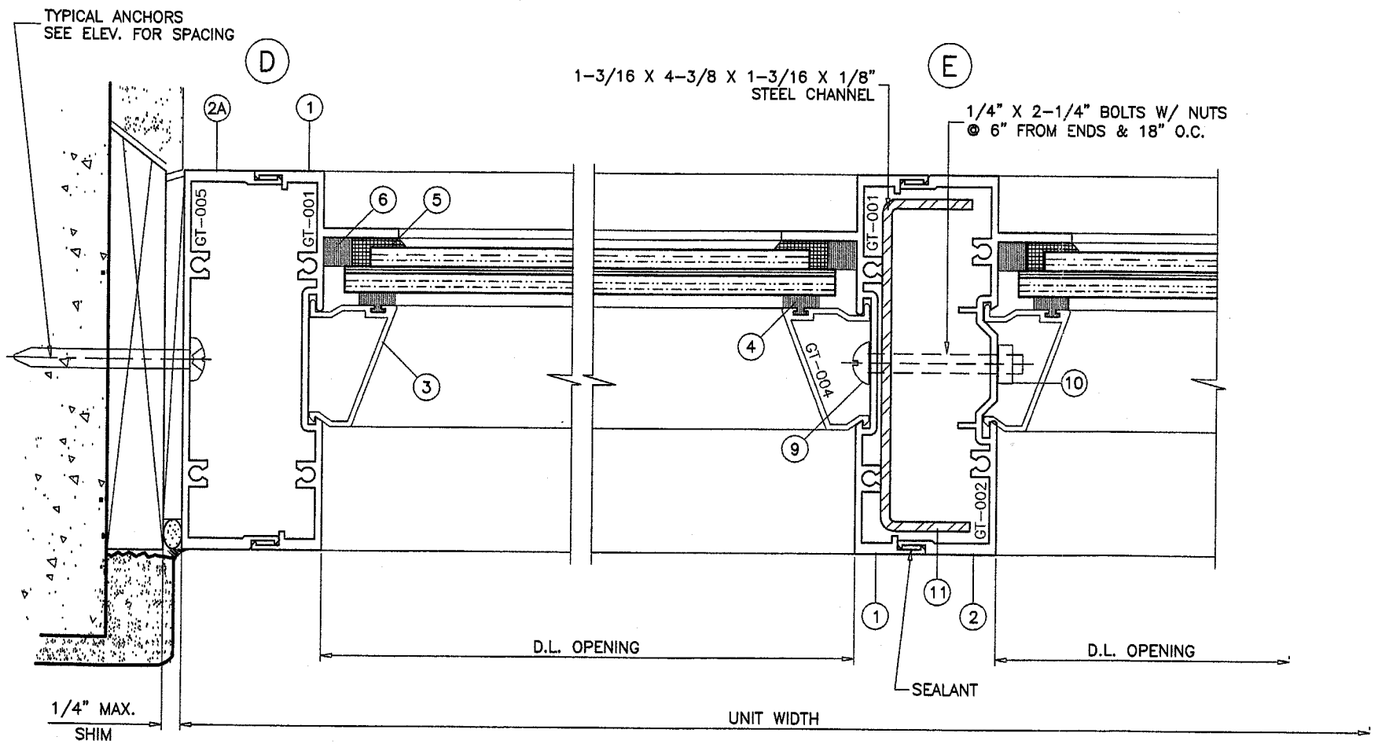

EXTERIOR

ITEM NO.	PART NUMBER	QUANTITY	DESCRIPTION	MATERIAL	MANF./SUPPLIER/REMARKS
1	GT-001	AS REQD.	FEMALE FRAME	6063-T6	–
2	GT-002	AS REQD.	MALE FRAME	6063-T6	–
2A	GT-005	AS REQD.	MALE FRAME	6063-T6	–
3	GT-004	AS REQD.	GLAZING BEAD	6063-T5	–
4	TR-427N	AS REQD.	GLAZING GASKET	NEOPRENE	TREMCO
5	995	AS REQD.	GLAZING COMPOUND	SILICONE	DOW CORNING
6	V2212	–	GLAZING TAPE (3/8" X 3/8")	–	NORTON
6A	V2204	–	GLAZING TAPE (1/8" X 3/8")	–	NORTON
7	#12 X 1-1/2"	–	FRAME ASSEMBLY SCREWS	–	SMS OR SELF DRILLING
9	–	–	1/4"-20 X 2-1/4" MS	–	–
10	–	–	1/4"-20 NUT	–	–
11	–	–	1-3/16 X 4-3/8" X 1-3/16 X 1/8" CHANNEL	STEEL	–

Engr: DR. HUMAYOUN FAROOQ
STRUCTURES
FLA. PE # 16557
C.A.N. 3538

NOV 26 2002

PRODUCT RENEWED
as complying with the Florida Buiding Code
Acceptance No. 03-0723.01
Expiration Date SEPT. 11, 2008
By Manuel Perez
Miami Dade Product Control Division

Approved as complying with the Florida Buiding Code
Date DEC. 26, 2002
NOA# 02-0328.01
Miami Dade Product Control Division
By Manuel Perez

AL-FAROOQ CORPORATION
ENGINEERS, PLANNERS & PRODUCT DESIGN
1235 SW 87 AVE
MIAMI, FLORIDA 33174
TEL. (305) 264-8100 FAX. (305) 262-6978

STORE\96-26GTE

SERIES-2046 IMPACT WINDOW WALL SYSTEM

GLASSTECH ENGINEERING INC.
8465 N.W. 70TH STREET
MIAMI, FL. 33166
TEL. (305) 594-4321

revisions:

no	date	by	description
E	11.23.02	H	NO CHANGE

date: 06-15-96
scale: 1/2" = 1"
dr. by: HAMID
chk. by:

drawing no.
96-26

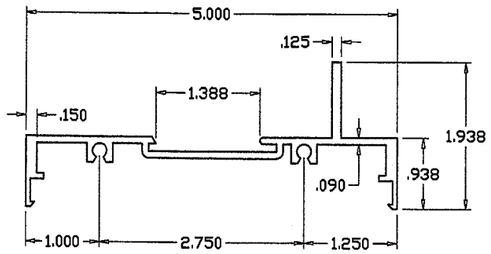

FEMALE FRAME (GT-001)

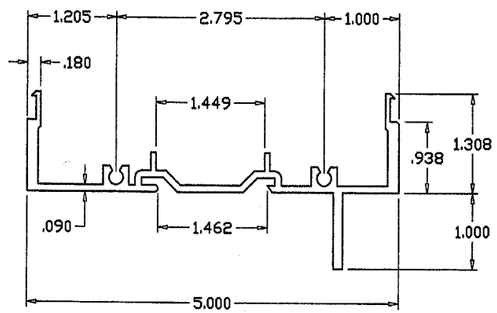

MALE FRAME (GT-002)

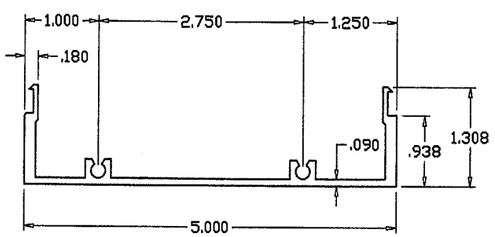

MALE FRAME (GT-005)

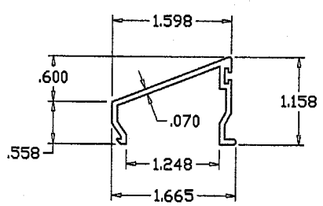

GALZING BEAD (GT-004)

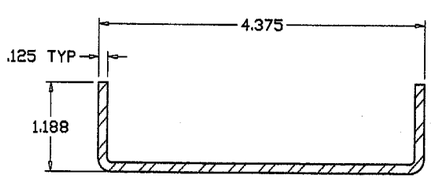

STEEL CHANNEL REINFORCEMENT

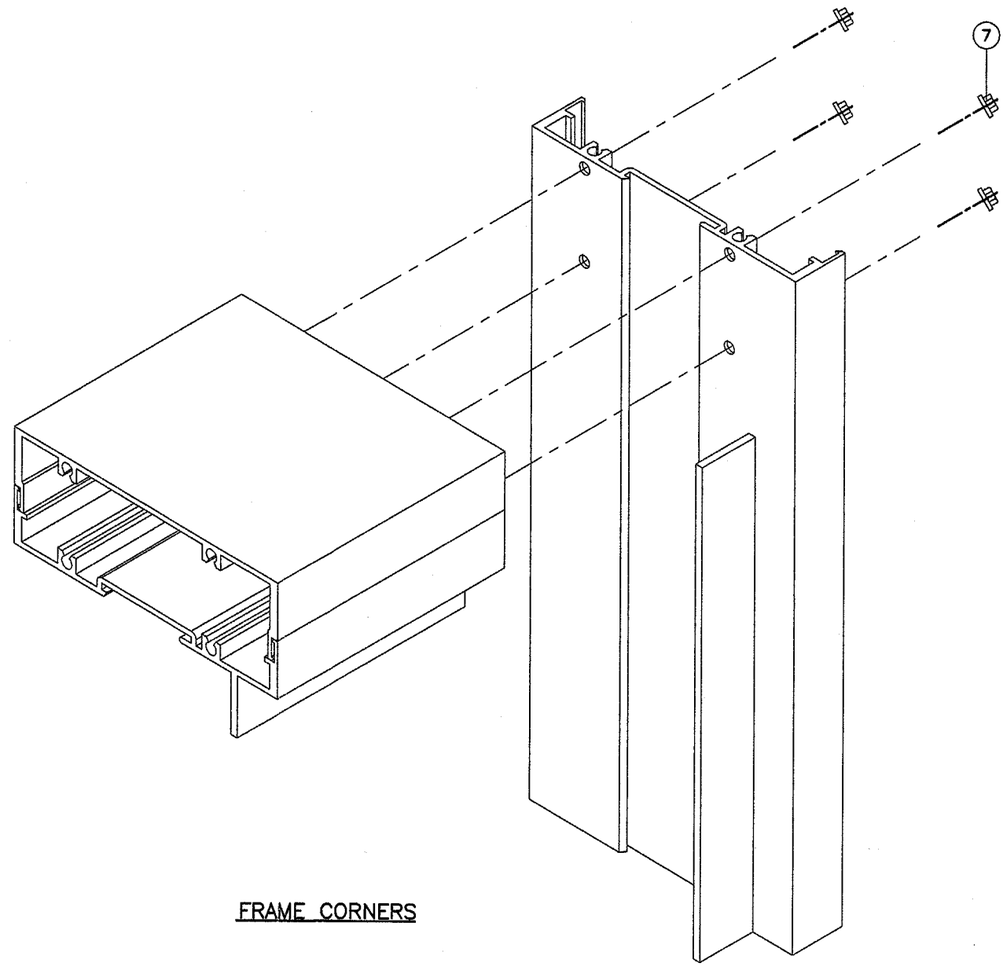

FRAME CORNERS

Engr: DR. HUMAYOUN FAROOQ
STRUCTURES
FLA. PE # 16557
C.A.N. 3538

NOV 26 2002

PRODUCT RENEWED
as complying with the Florida Buiding Code
Acceptance No. 03-0723.01
Expiration Date SEPT. 11, 2008
By Manuel Perez
Miami Dade Product Control Division

Approved as complying with the Florida Buiding Code
Date DEC. 26, 2002
NOA# 02-0328.01
Miami Dade Product Control Division
By Manuel Perez

AL-FAROOQ CORPORATION
ENGINEERS, PLANNERS & PRODUCT DESIGN
1235 SW 87 AVE
MIAMI, FLORIDA 33174
TEL. (305) 264-8100 FAX. (305) 262-6978

STORE\96-26GTE

SERIES-2046 IMPACT WINDOW WALL SYSTEM

GLASSTECH ENGINEERING INC.
8465 N.W. 70TH STREET
MIAMI, FL. 33166
TEL. (305) 594-4321

revisions:

no	date	by	description
E	11.23.02	H	REV. PER BCCO COMMENTS

date: 06-15-96
scale: 1/2" = 1"
dr. by: HAMID
chk. by:

drawing no.
96-26

sheet 6 of 6