MIAMI-DADE

BUILDING CODE COMPLIANCE OFFICE (BCCO)
PRODUCT CONTROL DIVISION

MIAMI-DADE COUNTY, FLORIDA
METRO-DADE FLAGLER BUILDING
140 WEST FLAGLER STREET, SUITE 1603
MIAMI, FLORIDA 33130-1563
(305) 375-2901 FAX (305) 375-2908

NOTICE OF ACCEPTANCE (NOA)

Kinco, LTD.
5245 Old Kings Road
Jacksonville, Fl 32254

SCOPE:
This NOA is being issued under the applicable rules and regulations governing the use of construction materials. The documentation submitted has been reviewed by Miami-Dade County Product Control Division and accepted by the Board of Rules and Appeals (BORA) to be used in Miami Dade County and other areas where allowed by the Authority Having Jurisdiction (AHJ).

This NOA shall not be valid after the expiration date stated below. The Miami-Dade County Product Control Division (In Miami Dade County) and/or the AHJ (in areas other than Miami Dade County) reserve the right to have this product or material tested for quality assurance purposes. If this product or material fails to perform in the accepted manner, the manufacturer will incur the expense of such testing and the AHJ may immediately revoke, modify, or suspend the use of such product or material within their jurisdiction. BORA reserves the right to revoke this acceptance, if it is determined by Miami-Dade County Product Control Division that this product or material fails to meet the requirements of the applicable building code.

This product is approved as described herein, and has been designed to comply with the High Velocity Hurricane Zone of the Florida Building Code.

DESCRIPTION: Series "UNMPRW" Aluminum Horizontal Rolling Window

APPROVAL DOCUMENT: Drawing No. **W03-50,** titled "UNMPRW Alum Horizontal Rolling Window (N.I.)", sheets 1 through 10 of 10, prepared by Al Farooq Corporation, dated 6/30/03, with revision date 08/21/03, signed and sealed by Humayoun Farooq, P.E., bearing the Miami-Dade County Product Control Approval stamp with the Notice of Acceptance number and approval date by the Miami-Dade County Product Control Division.

MISSILE IMPACT RATING: None

LABELING: Each unit shall bear a permanent label with the manufacturer's name or logo, city, state and following statement: "Miami-Dade County Product Control Approved", unless otherwise noted herein.

RENEWAL of this NOA shall be considered after a renewal application has been filed and there has been no change in the applicable building code negatively affecting the performance of this product.

TERMINATION of this NOA will occur after the expiration date or if there has been a revision or change in the materials, use, and/or manufacture of the product or process. Misuse of this NOA as an endorsement of any product, for sales, advertising or any other purposes shall automatically terminate this NOA. Failure to comply with any section of this NOA shall be cause for termination and removal of NOA.

ADVERTISEMENT: The NOA number preceded by the words Miami-Dade County, Florida, and followed by the expiration date may be displayed in advertising literature. If any portion of the NOA is displayed, then it shall be done in its entirety.

INSPECTION: A copy of this entire NOA shall be provided to the user by the manufacturer or its distributors and shall be available for inspection at the job site at the request of the Building Official.
This NOA consists of this page 1 as well as approval document mentioned above.
The submitted documentation was reviewed by **Theodore Berman, P.E.**

9/19/2003

PRODUCT CONTROL ACCEPTED

NOA No 03-0725.01
Expiration Date: October 09, 2008
Approval Date: October 09, 2003

Kinco, LTD.

NOTICE OF ACCEPTANCE: EVIDENCE SUBMITTED

A. DRAWINGS

1. Manufacturer's die drawings and sections.
   Drawing No. **W03-50,** titled "UNMPRW Alum Horizontal Rolling Window (N.I.)", sheets 1 through 10 of 10, prepared by Al Farooq Corporation, dated 6/30/03, with revision date 08/21/03, signed and sealed by Humayoun Farooq, P.E.

B. TESTS

1. Test reports on 1) Air Infiltration Test, per FBC, TAS 202-94
   2) Uniform Static Air Pressure Test, Loading per FBC, TAS 202-94
   3) Water Resistance Test, per FBC, TAS 202-94
   4) Forced Entry Test, per FBC 2411 3.2.1 and TAS 202-94
   along with marked-up drawings and installation diagram of an aluminum horizontal rolling window, prepared by Certified Testing Laboratories, Test Report No. CTLA-1105-W dated 05/09/03-06/05/03, signed and sealed by Ramesh Patel, P.E.

C. CALCULATIONS

1. Anchor Calculations, ASTM-E1300-98 and structural analysis, prepared by Al Farooq Corporation, dated 7/15/03, signed and sealed by Humayoun Farooq, P.E.

D. MATERIAL CERTIFICATIONS

1. None

E. QUALITY ASSURRANCE

1. Miami-Dade County Building Code Compliance Office

F. STATEMENTS

1. Statement letter of conformance, dated 7/17/03, signed and sealed by Humayoun Farooq, P.E.
2. Statement letter of no financial interest, dated 7/17/03, signed and sealed by Humayoun Farooq, P.E.

G. OTHER

1. Letter from the consultant stating that the product is compliance with the Florida Building Code (FBC).

Theodore Berman, P.E.
Deputy Director, Product Control Division
NOA No 03-0725.01
Expiration Date: October 09, 2008
Approval Date: October 09, 2003

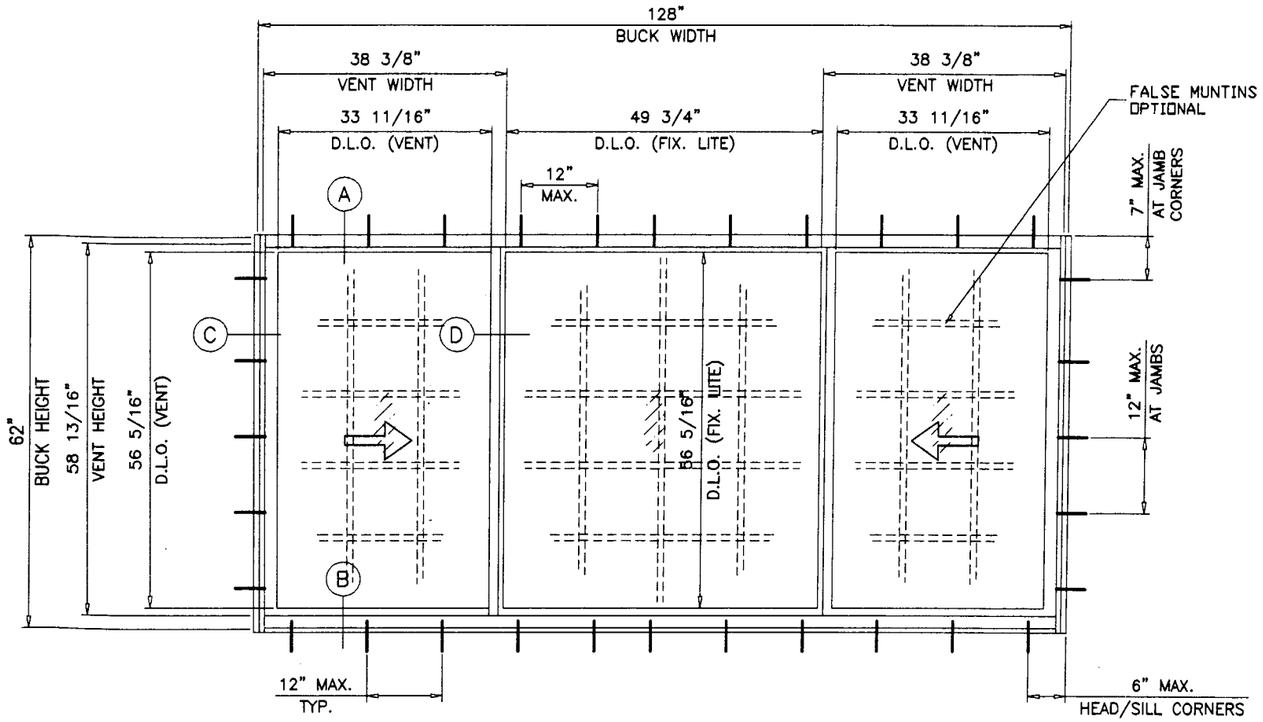

FLANGE FRAME
TESTED UNIT

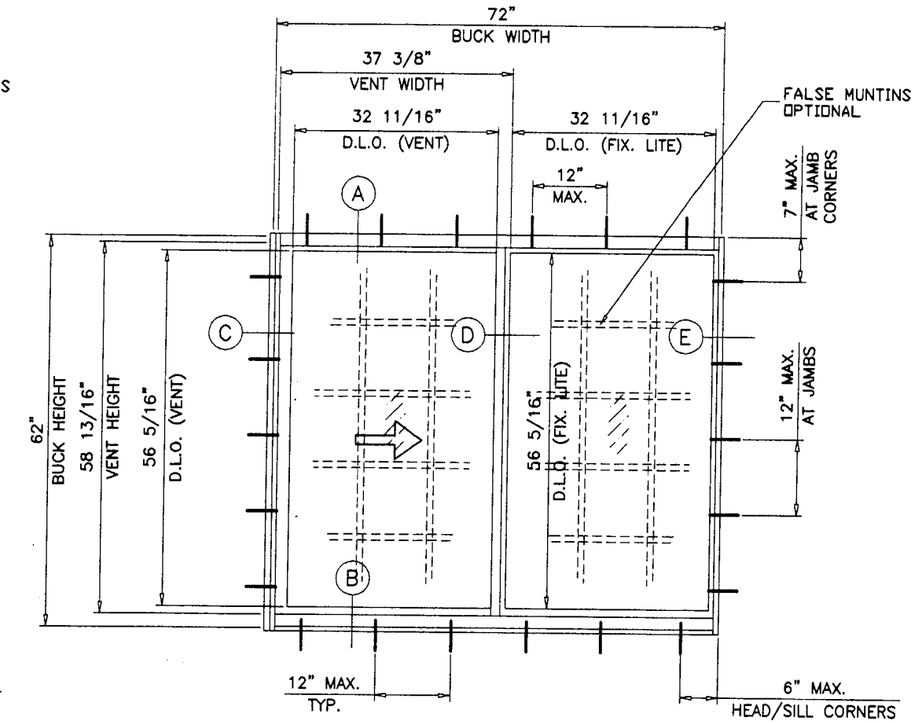

XO WINDOW
OX OPPOSITE

UNMPRW ALUM HORIZONTAL SLIDING WINDOW NON-IMPACT

DESIGN LOAD RATINGS FOR THESE WINDOWS TO BE AS PER CHARTS SHOWN ON SHEETS 3 & 4.

WINDOWS ARE NOT RATED FOR IMPACT. AND REQUIRE PROTECTION BY MIAMI-DADE COUNTY APPROVED IMPACT RESISTANT SHUTTERS.

THIS PRODUCT IS DESIGNED TO COMPLY WITH THE HIGH VELOCITY HURRICANE ZONE OF THE 2001 FLORIDA BUILDING CODE.
ALSO FOR WIND LOADS AS PER ASCE 7-88. ASCE 7-93, ASCE 7-95 OR ASCE 7-98 AS REQUIRED BY PREVAILING BUILDING CODE.

WOOD BUCKS BY OTHERS, MUST BE ANCHORED PROPERLY TO TRANSFER LOADS TO THE STRUCTURE.

ANCHORS SHALL BE AS LISTED, SPACED AS SHOWN ON DETAILS. ANCHOR EMBEDMENT TO BASE MATERIAL SHALL BE BEYOND WALL DRESSING OR STUCCO.

ANCHORING OR LOADING CONDITIONS NOT SHOWN IN THESE DETAILS ARE NOT PART OF THIS APPROVAL.

Approved as complying with the Florida Building Code
Date 10/09/03
NOA# 03-0325.01
Miami Dade Product Control Division
By Eleanor Berman

Engr: DR. HUMAYOUN FAROOQ
STRUCTURES
FLA. PE # 16557
C.A.N. 3538
SEP 04 2003

AL-FAROOQ CORPORATION
ENGINEERS, PLANNERS & PRODUCT DESIGN
1235 SW 87 AVE
MIAMI, FLORIDA 33174
TEL. (305) 264-8100 FAX. (305) 262-6978

COMP-ANL\W03-50KL

UNMPRW ALUM HORIZONTAL ROLLING WINDOW (N.I.)

KINCO LTD.
5245 OLD KINGS ROAD
JACKSONVILLE, FL 32254
TEL. (800) 324-0244

revisions:

no	date	by	description
A	08.21.03		XO ELEV. ADDED

date: 06-30-03
scale: 1/2"=1'-0"
dr. by: HAMID
chk. by:

drawing no.
W03-50

sheet 1 of 10

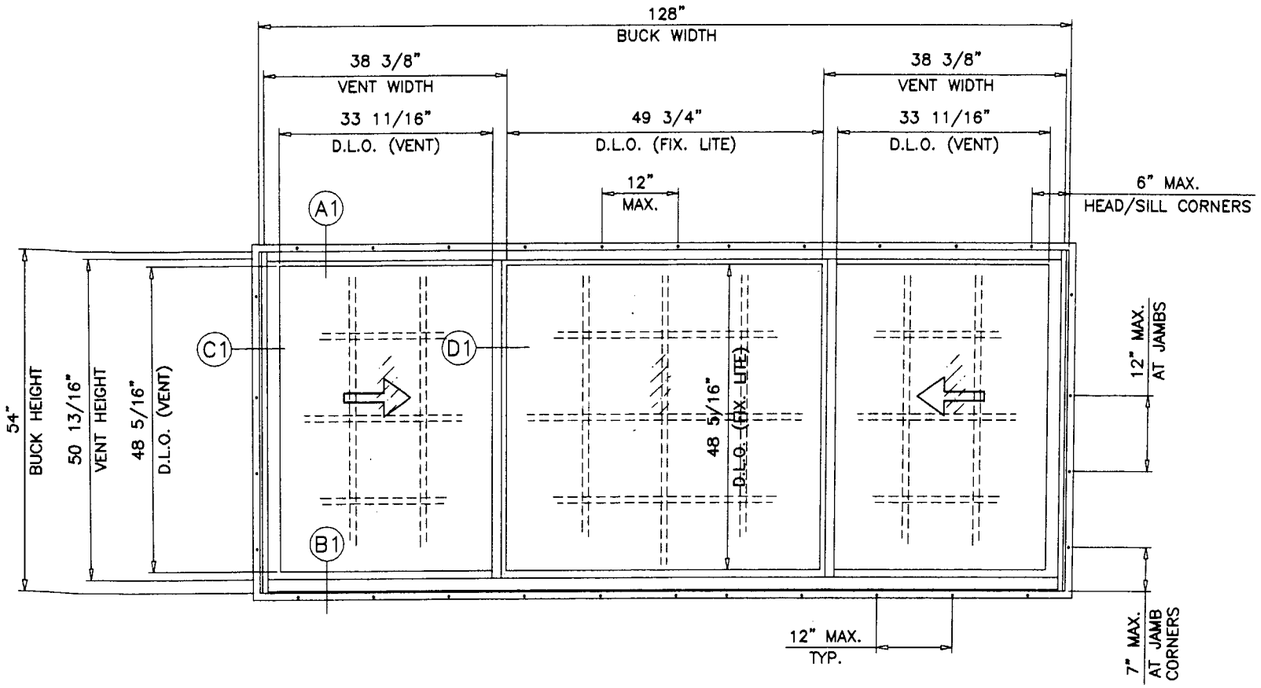

FIN FRAME
TESTED UNIT

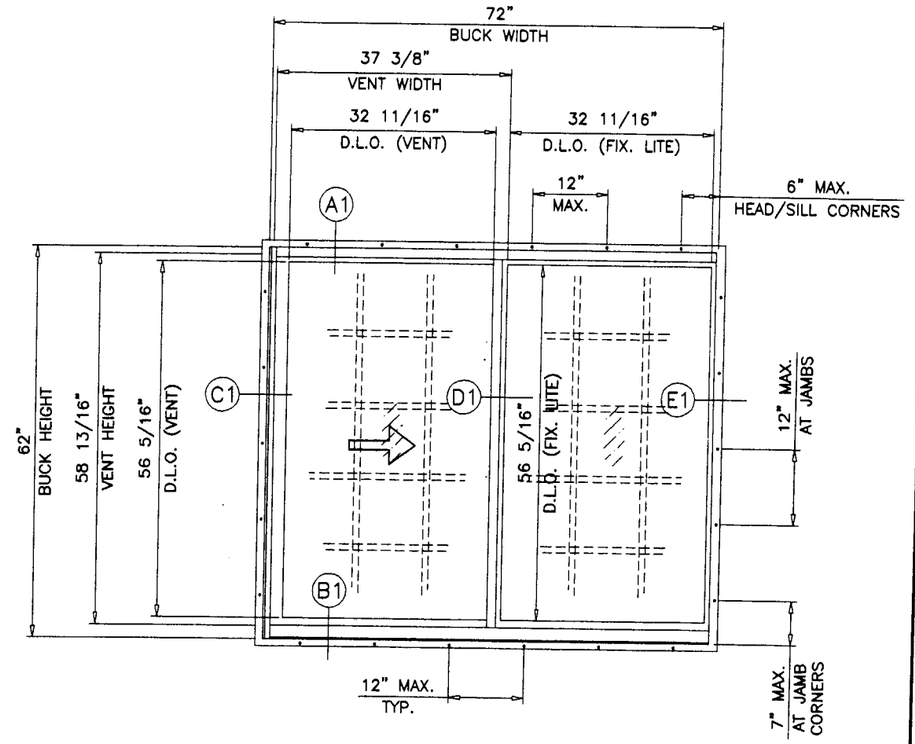

XO WINDOW
OX OPPOSITE

Approved as complying with the
Florida Building Code
Date 10/09/03
NOA# 03-0725.01
Miami Dade Product Control
Division
By [signature]

Engr: DR. HUMAYOUN FAROOQ
STRUCTURES
FLA. PE # 16557
C.A.N. 3538
SEP 0 4 2003

AL-FAROOQ CORPORATION
ENGINEERS, PLANNERS & PRODUCT DESIGN
1235 SW 87 AVE
MIAMI, FLORIDA 33174
TEL. (305) 264-8100 FAX. (305) 262-6978
COMP-ANL\W03-50KL

UNMPRW ALUM HORIZONTAL ROLLING WINDOW (N.I.)

KINCO LTD.
5245 OLD KINGS ROAD
JACKSONVILLE, FL 32254
TEL. (800) 324-0244

revisions:

no	date	by	description
A	08.21.03		XO ELEV. ADDED

date: 06-30-03
scale: 1/2"=1'-0"
dr. by: HAMID
chk. by:

drawing no.
W03-50

sheet 2 of 10

FLANGE OR FIN FRAME WINDOWS (XO OR OX SIZES)

DESIGN LOAD CAPACITY - PSF

BUCK DIMS.		A	1/8" ANN. GLASS		3/16" ANN. GLASS 1/4" ANN. GLASS		1/8" TEMP. GLASS		3/16" TEMP. GLASS 1/4" TEMP. GLASS	
WIDTH	HEIGHT		EXT.(+)	INT.(−)	EXT.(+)	INT.(−)	EXT.(+)	INT.(−)	EXT.(+)	INT.(−)
25−1/2"	25" (3)	3	66.7	78.4	66.7	125.0	66.7	210.0	66.7	210.0
36"		3	66.7	78.4	66.7	125.0	66.7	210.0	66.7	210.0
52−1/8"		5	66.7	78.4	66.7	125.0	66.7	210.0	66.7	210.0
74"		6	54.3	54.3	66.7	101.4	66.7	186.6	66.7	186.6
25−1/2"	37−3/8" (3)	3	66.7	78.4	66.7	110.9	66.7	210.0	66.7	210.0
36"		3	66.7	68.2	66.7	85.8	66.7	171.8	66.7	171.8
52−1/8"		5	57.7	57.7	66.7	69.1	66.7	182.0	66.7	182.0
74"		6	42.6	42.6	62.8	62.8	66.7	138.7	66.7	138.7
25−1/2"	49−5/8" (4)	3	66.7	78.4	66.7	79.5	66.7	200.9	66.7	200.9
36"		3	52.9	52.9	59.9	59.9	66.7	135.9	66.7	135.9
52−1/8"		5	38.7	38.7	46.0	46.0	66.7	124.1	66.7	123.1
74"		6	32.1	32.1	38.1	38.1	66.7	102.8	66.7	102.0
25−1/2"	62" (5)	3	61.8	61.8	61.8	61.8	66.7	145.9	66.7	164.5
36"		3	45.9	45.9	45.9	45.9	66.7	105.1	66.7	112.2
52−1/8"		5	27.9	27.9	34.3	34.3	59.4	75.4	66.7	92.0
74"		6	25.3	25.3	27.2	27.2	45.3	57.4	66.7	73.0
24"	24" (2)	3	66.7	78.4	66.7	125.0	66.7	210.0	66.7	210.0
36"		3	66.7	78.4	66.7	125.0	66.7	210.0	66.7	210.0
48"		4	66.7	78.4	66.7	125.0	66.7	210.0	66.7	210.0
54"		5	66.7	78.4	66.7	125.0	66.7	210.0	66.7	210.0
60"		5	66.7	72.0	66.7	125.0	66.7	207.5	66.7	207.5
72"		6	57.4	57.4	66.7	110.5	66.7	199.2	66.7	199.2
24"	36" (3)	3	66.7	78.4	66.7	121.7	66.7	210.0	66.7	210.0
36"		3	66.7	71.1	66.7	90.2	66.7	177.1	66.7	177.1
48"		4	61.1	61.1	66.7	76.1	66.7	166.0	66.7	166.0
54"		5	58.8	58.8	66.7	72.1	66.7	178.9	66.7	178.9
60"		5	51.3	51.3	66.7	69.6	66.7	156.2	66.7	156.2
72"		6	44.8	44.8	66.7	67.6	66.7	147.6	66.7	147.6
24"	48" (4)	3	66.7	78.4	66.7	87.0	66.7	210.0	66.7	210.0
36"		3	54.4	54.4	62.4	62.4	66.7	139.8	66.7	139.8
48"		4	38.4	38.4	50.7	50.7	66.7	132.8	66.7	132.8
54"		5	39.6	39.6	47.0	47.0	66.7	127.1	66.7	126.1
60"		5	37.7	37.7	44.3	44.3	66.7	119.6	66.7	118.6
72"		6	33.9	33.9	40.6	40.6	66.7	109.6	66.7	108.8
24"	54" (5)	3	66.7	76.1	66.7	76.1	66.7	199.2	66.7	199.2
36"		3	50.6	50.6	54.1	54.1	66.7	126.5	66.7	126.5
48"		4	34.0	34.0	43.5	43.5	66.7	117.5	66.7	116.5
54"		5	31.8	31.8	40.1	40.1	66.7	108.3	66.7	107.4
60"		5	33.2	33.2	37.5	37.5	66.7	101.2	66.7	100.4
72"		6	30.2	30.2	33.8	33.8	66.7	91.4	66.7	90.6
24"	60" (5)	3	66.7	67.6	66.7	67.6	66.7	171.0	66.7	181.1
36"		3	47.7	47.7	47.7	47.7	66.7	115.5	66.7	115.5
48"		4	29.4	29.4	38.0	38.0	66.7	89.7	66.7	102.0
54"		5	28.5	28.5	34.9	34.9	64.0	81.2	66.7	93.5
60"		5	27.2	27.2	32.5	32.5	58.8	74.6	66.7	87.0
72"		6	26.7	26.7	29.0	29.0	51.4	65.2	66.7	77.7
24"	62" (5)	3	65.2	65.2	65.2	65.2	66.7	154.8	66.7	174.8
36"		3	45.9	45.9	45.9	45.9	66.7	105.1	66.7	112.2
48"		4	28.6	28.6	36.5	36.5	63.8	81.0	66.7	97.9
54"		5	27.4	27.4	33.5	33.5	57.7	73.2	66.7	89.7
60"		5	26.2	26.2	31.1	31.1	52.9	67.1	66.7	83.3
72"		6	25.8	25.8	27.7	27.7	46.1	58.5	66.7	74.1

A = NO. OF ANCHORS PER HEAD & SILL
( ) = NO. OF ANCHORS PER JAMB

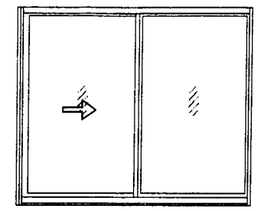

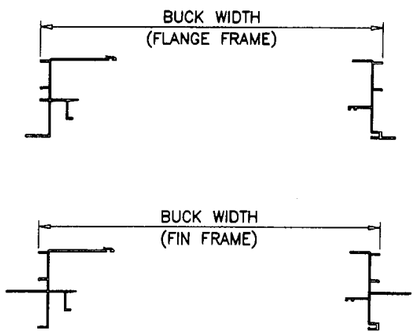

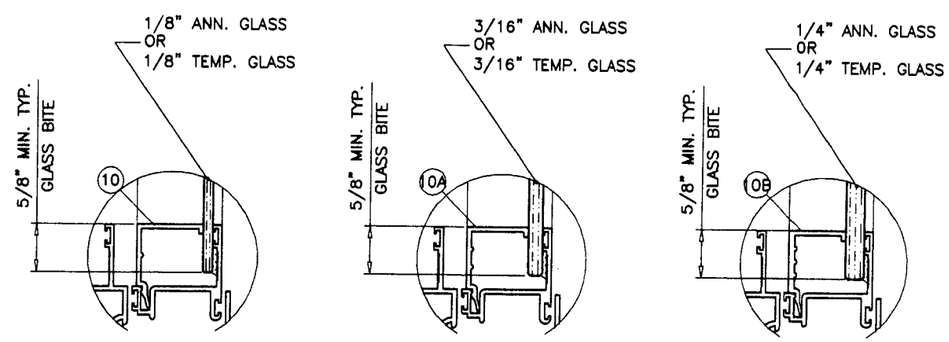

GLAZING OPTIONS

Approved as complying with the Florida Building Code
Date 10/09/03
NOA# 03-0325.01
Miami Dade Product Control Division
By

Engr: DR. HUMAYOUN FAROOQ
STRUCTURES
FLA. PE # 16557
C.A.N. 3538

SEP 0 4 2003

AL-FAROOQ CORPORATION
ENGINEERS, PLANNERS & PRODUCT DESIGN
1235 SW 87 AVE
MIAMI, FLORIDA 33174
TEL. (305) 264-8100 FAX. (305) 262-6978

COMP-ANL\W03-50KL

UNMPRW ALUM HORIZONTAL ROLLING WINDOW (N.I.)

KINCO LTD.
5245 OLD KINGS ROAD
JACKSONVILLE, FL 32254
TEL. (800) 324-0244

revisions:

no	date	by	description
A	08.21.03		SHEET NUMBER CHANGED

date: 06-30-03
scale: 1/2"=1'-0"
dr. by: HAMID
chk. by:

drawing no.
W03-50

sheet 3 of 10

FLANGE OR FIN FRAME WINDOWS (XOX SIZES)

DESIGN LOAD CAPACITY - PSF (EQUAL GLASS LITES)

BUCK DIMS.		A	1/8" ANN. GLASS		3/16" ANN. GLASS 1/4" ANN. GLASS		1/8" TEMP. GLASS		3/16" TEMP. GLASS 1/4" TEMP. GLASS	
WIDTH	HEIGHT		EXT.(+)	INT.(−)	EXT.(+)	INT.(−)	EXT.(+)	INT.(−)	EXT.(+)	INT.(−)
73"	25"	6	66.7	78.4	66.7	125.0	66.7	189.6	66.7	189.6
105−1/4"	(3)	9	57.9	57.9	66.7	108.0	66.7	185.6	66.7	185.6
73"	37−3/8"	6	55.5	55.5	66.7	71.4	66.7	135.6	66.7	135.6
105−1/4"	(3)	9	44.9	44.9	63.0	63.0	66.7	132.9	66.7	132.9
73"	49−5/8""	6	37.1	37.1	48.1	48.1	66.7	105.8	66.7	105.8
105−1/4"	(3)	9	33.8	33.8	38.9	38.9	66.7	105.0	66.7	104.3
73"	62"	6	28.6	28.6	36.1	36.1	63.1	80.0	66.7	86.6
105−1/4"	(3)	9	26.3	26.3	28.1	28.1	47.0	59.6	66.7	75.3
72"		6	66.7	78.4	66.7	125.0	66.7	199.2	66.7	199.2
84"		7	66.7	77.9	66.7	125.0	66.7	193.7	66.7	193.7
96"	24"	8	65.0	65.0	66.7	125.0	66.7	189.7	66.7	189.7
108"	(3)	9	57.9	57.9	66.7	111.7	66.7	186.8	66.7	186.8
120"		10	51.6	51.6	66.7	99.6	66.7	184.4	66.7	184.4
128"		11	45.7	45.7	66.7	94.7	66.7	182.8	66.7	188.9
72"		6	61.3	61.3	66.7	76.1	66.7	142.3	66.7	142.3
84"		7	57.0	57.0	66.7	71.1	66.7	139.0	66.7	139.0
96"	36"	8	49.5	49.5	66.7	68.5	66.7	135.8	66.7	135.8
108"	(3)	9	45.1	45.1	66.7	67.6	66.7	132.8	66.7	132.8
120"		10	41.1	41.1	65.3	65.3	66.7	130.2	66.7	130.2
128"		11	38.7	38.7	61.3	61.3	66.7	132.8	66.7	132.8
72"		6	38.8	38.8	50.7	50.7	66.7	110.7	66.7	110.7
84"		7	39.3	39.3	46.0	46.0	66.7	108.7	66.7	108.7
96"	48"	8	37.8	37.8	42.8	42.8	66.7	106.7	66.7	106.7
108"	(4)	9	34.1	34.1	40.6	40.6	66.7	104.8	66.7	104.8
120"		10	31.1	31.1	39.1	39.1	66.7	103.0	66.7	103.0
128"		11	29.5	29.5	38.5	38.5	66.7	104.1	66.7	103.2
72"		6	34.2	34.2	43.5	43.5	66.7	99.6	66.7	99.6
84"		7	34.3	34.3	39.1	39.1	66.7	98.0	66.7	98.0
96"	54"	8	32.2	32.2	36.0	36.0	66.7	96.4	66.7	96.4
108"	(5)	9	30.4	30.4	33.8	33.8	66.7	91.4	66.7	90.6
120"		10	27.9	27.9	32.2	32.2	66.7	87.1	66.7	86.4
128"		11	26.5	26.5	31.4	31.4	66.7	84.9	66.7	84.3
72"		6	29.8	29.8	38.0	38.0	66.7	89.7	66.7	90.5
84"		7	28.1	28.1	34.0	34.0	62.1	78.8	66.7	89.2
96"	60"	8	28.7	28.7	31.1	31.1	55.9	71.0	66.7	83.4
108"	(5)	9	26.8	26.8	29.0	29.0	51.4	65.2	66.7	77.7
120"		10	25.6	25.6	27.4	27.4	48.0	60.9	66.7	73.4
128"		11	24.6	24.6	26.6	26.6	46.3	58.7	66.7	71.2
72"		6	29.0	29.0	36.5	36.5	63.8	81.0	66.7	87.9
84"		7	27.0	27.0	32.6	32.6	56.0	71.0	66.7	86.6
96"	62"	8	27.6	27.6	29.8	29.8	50.3	63.8	66.7	79.8
108"	(5)	9	25.9	25.9	27.7	27.7	46.1	58.5	66.7	74.1
120"		10	24.3	24.3	26.1	26.1	43.0	54.5	66.7	69.9
128"		11	23.8	23.8	25.3	25.3	41.3	52.5	66.7	67.7

A = NO. OF ANCHORS PER HEAD & SILL
( ) = NO. OF ANCHORS PER JAMB

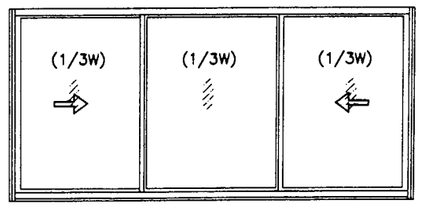

OPERATING VENTS TO BE 1/3 OF THE WINDOW WIDTH

FLANGE OR FIN FRAME WINDOWS (XOX SIZES)

DESIGN LOAD CAPACITY - PSF (UNEQUAL GLASS LITES)

BUCK DIMS.		A	1/8" ANN. GLASS		3/16" ANN. GLASS 1/4" ANN. GLASS		1/8" TEMP. GLASS		3/16" TEMP. GLASS 1/4" TEMP. GLASS	
WIDTH	HEIGHT		EXT.(+)	INT.(−)	EXT.(+)	INT.(−)	EXT.(+)	INT.(−)	EXT.(+)	INT.(−)
73"	25"	6	58.6	58.6	66.7	109.4	66.7	186.8	66.7	186.8
105−1/4"	(3)	9	36.3	36.3	66.7	76.0	66.7	145.2	66.7	185.6
73"	37−3/8"	6	45.2	45.2	66.7	71.5	66.7	129.6	66.7	129.6
105−1/4"	(3)	9	31.6	31.6	50.7	50.7	66.7	126.4	66.7	130.5
73"	49−5/8""	6	34.1	34.1	46.5	46.5	66.7	99.5	66.7	99.5
105−1/4"	(3)	9	25.4	25.4	40.0	40.0	66.7	100.9	66.7	100.9
73"	62"(3)	6	26.5	26.5	34.2	34.2	58.6	74.4	66.7	80.6
72"		6	61.1	61.1	66.7	118.7	66.7	196.7	66.7	196.7
84"		7	51.3	51.3	66.7	99.1	66.7	193.2	66.7	193.2
96"	24"	8	42.1	42.1	66.7	88.5	66.7	188.4	66.7	189.7
108"	(3)	9	36.6	36.6	66.7	83.5	66.7	146.4	66.7	186.8
120"		10	33.0	33.0	66.7	75.4	66.7	132.0	66.7	184.4
128"		11	32.1	32.1	66.7	75.6	66.7	128.4	66.7	188.9
72"		6	47.2	47.2	66.7	75.1	66.7	136.2	66.7	136.2
84"		7	41.0	41.0	65.0	65.0	66.7	134.5	66.7	134.5
96"	36"	8	35.7	35.7	56.7	56.7	66.7	132.8	66.7	132.8
108"	(3)	9	31.0	31.0	48.1	48.1	66.7	124.0	66.7	131.2
120"		10	27.6	27.6	43.5	43.5	66.7	110.4	66.7	129.6
128"		11	25.8	25.8	40.6	40.6	66.7	103.2	66.7	132.5
72"		6	35.7	35.7	49.2	49.2	66.7	104.2	66.7	104.2
84"		7	31.0	31.0	45.6	45.6	66.7	103.1	66.7	103.1
96"	48"	8	27.6	27.6	43.5	43.5	66.7	102.2	66.7	102.2
108"	(4)	9	25.4	25.4	42.1	42.1	66.7	101.2	66.7	101.2
120"		10	22.9	22.9	37.7	37.7	–	–	66.7	100.2
128"		11	21.0	21.0	35.6	35.6	–	–	66.7	102.7
72"		6	31.1	31.1	41.6	41.6	66.7	93.2	66.7	93.2
84"	54"	7	27.8	27.8	38.1	38.1	66.7	92.4	66.7	92.4
96"	(5)	8	25.5	25.5	35.8	35.8	66.7	91.6	66.7	91.6
108"		9	22.7	22.7	34.3	34.3	–	–	66.7	90.8
72"	60"	6	27.6	27.6	36.1	36.1	65.9	83.6	66.7	84.3
84"	(5)	7	25.5	25.5	32.7	32.7	58.9	74.7	66.7	83.7
96"		8	22.9	22.9	30.4	30.4	–	–	66.7	81.6
72"	62"	6	26.7	26.7	34.5	34.5	59.3	75.2	66.7	81.7
84"	(5)	7	24.2	24.2	31.3	31.3	52.8	67.0	66.7	81.1
96"		8	21.9	21.9	29.0	29.0	–	–	66.7	77.7

A = NO. OF ANCHORS PER HEAD & SILL
( ) = NO. OF ANCHORS PER JAMB

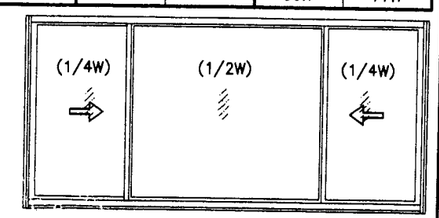

OPERATING VENTS TO BE 1/4 OF THE WINDOW WIDTH

Approved as complying with the Florida Building Code
Date 10/09/03
NOAS 03-0375.01
Miami Dade Product Control Division
By

Engr: DR. HUMAYOUN FARCOQ
STRUCTURES
FLA. PE # 18557
C.A.N. 3538

SEP 0 4 2003

AL-FAROOQ CORPORATION
ENGINEERS, PLANNERS & PRODUCT DESIGN
1235 SW 87 AVE
MIAMI, FLORIDA 33174
TEL. (305) 264-8100 FAX. (305) 262-6978
COMP-ANL\W03-50KL

UNMPRW ALUM HORIZONTAL ROLLING WINDOW (N.I.)

KINCO LTD.
5245 OLD KINGS ROAD
JACKSONVILLE, FL 32254
TEL. (800) 324-0244

revisions:

no	date	by	description
A	08.21.03		SHEET NUMBER CHANGED

date: 06-30-03
scale: 1/2"=1'-0"
dr. by: HAMID
chk. by:

drawing no.
W03-50

sheet 4 of 10

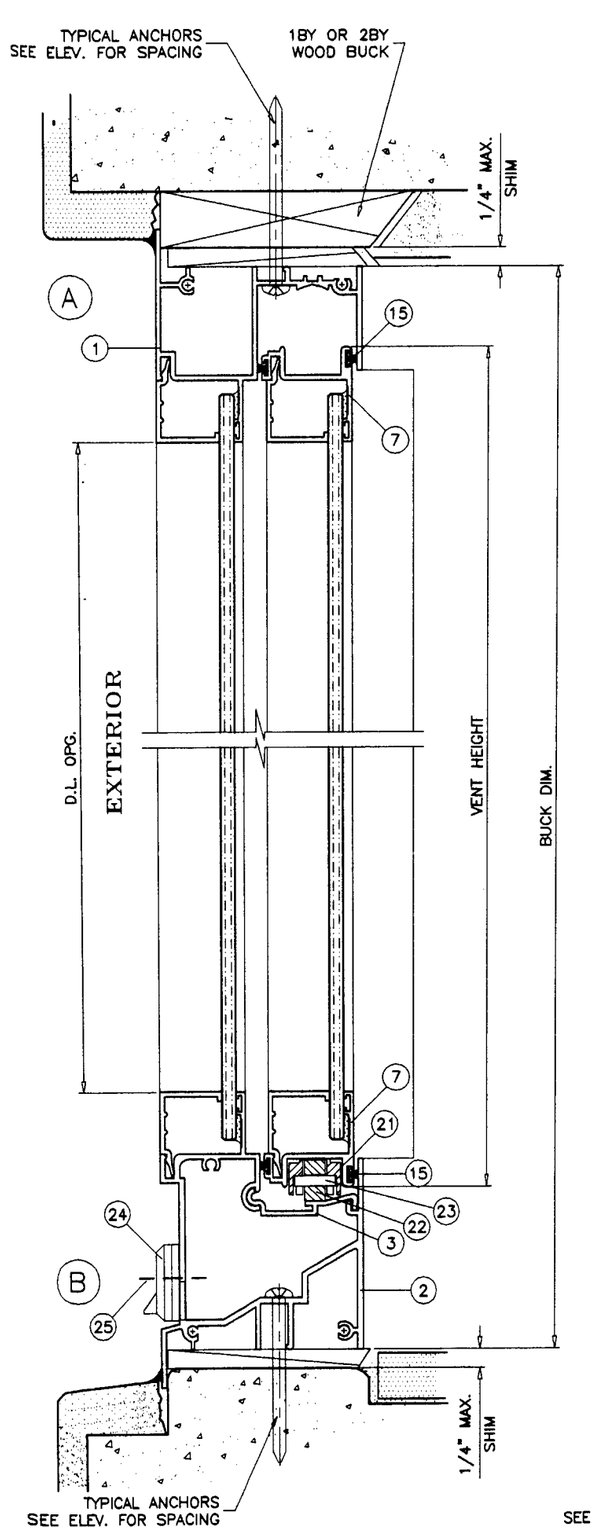

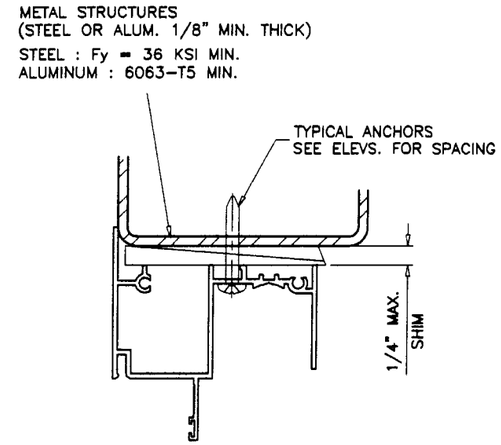

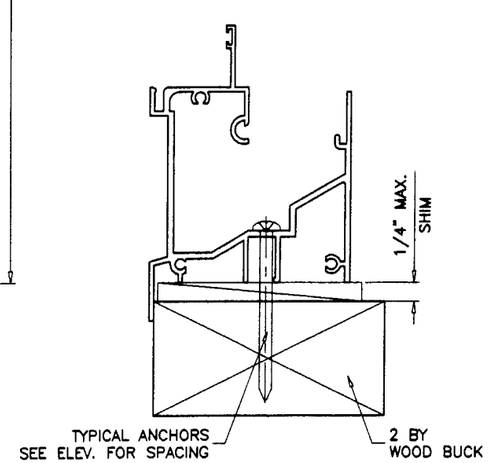

WOOD BUCKS NOT BY KINCO, MUST SUSTAIN LOADS IMPOSED BY GLAZING SYSTEM AND TRANSFER THEM TO THE BUILDING STRUCTURE.

TYPICAL ANCHORS: SEE ELEV. FOR SPACING

#12 SMS

INTO 2BY WOOD BUCKS OR WOOD STRUCTURE
1-3/8" MIN. PENETRATION INTO WOOD

1/4" TAPCONS

INTO 2BY WOOD BUCKS OR WOOD STRUCTURE
1-3/8" MIN. PENETRATION INTO WOOD

THRU 1BY BUCKS INTO MASONRY OR DIRECTLY INTO MASONRY
1-1/4" MIN. EMBED INTO CONC. OR MASONRY

3/16" TEKS OR SELF DRILLING SCREWS

INTO METAL STRUCTURES (1/8" MIN. THICKNESS)
(1/4" MAX. SHIM SPACE)

#10 SMS OR SELF DRILLING SCREWS

INTO DADE COUNTY APPROVED MULLIONS
(NO SHIM SPACE)

WEEPHOLES:

W1 = 1" X 1/4" WEEP HOLE WITH PLASTIC BAFFLE
AT 5" FROM EACH END.

FLANGE FRAME WINDOW

Approved as complying with the Florida Building Code
Date 10/09/03
NOA# 03-0725.01
Miami Dade Product Control Division
By: Claudine Bowman

Engr: DR. HUMAYOUN FAROOQ
STRUCTURES
FLA. PE # 16557
C.A.N. 3538

SEP 04 2003

AL-FAROOQ CORPORATION
ENGINEERS, PLANNERS & PRODUCT DESIGN
1235 SW 87 AVE
MIAMI, FLORIDA 33174
TEL. (305) 264-8100 FAX. (305) 262-6978
COMP-ANL\W03-50KL

UNMPRW ALUM HORIZONTAL ROLLING WINDOW (N.I.)

KINCO LTD.
5245 OLD KINGS ROAD
JACKSONVILLE, FL 32254
TEL. (800) 324-0244

revisions:

no	date	by	description
A	08.21.03		REV. PER BCCO COMMENTS

date: 06-30-03
scale: 1/2" = 1"
dr. by: HAMID
chk. by:

drawing no.
W03-50

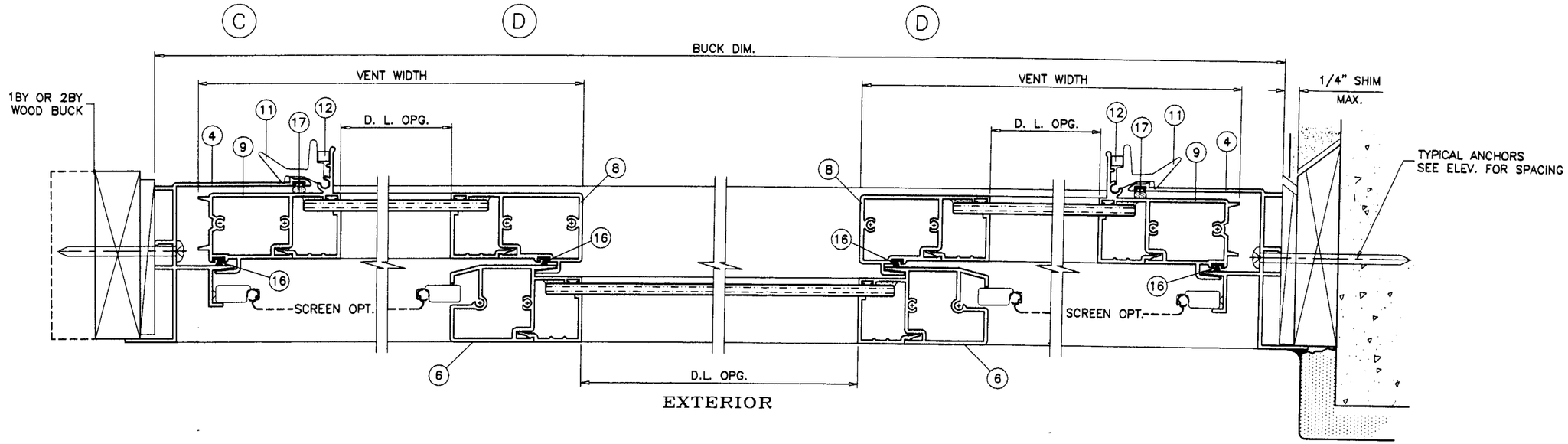

XOX LAYOUT

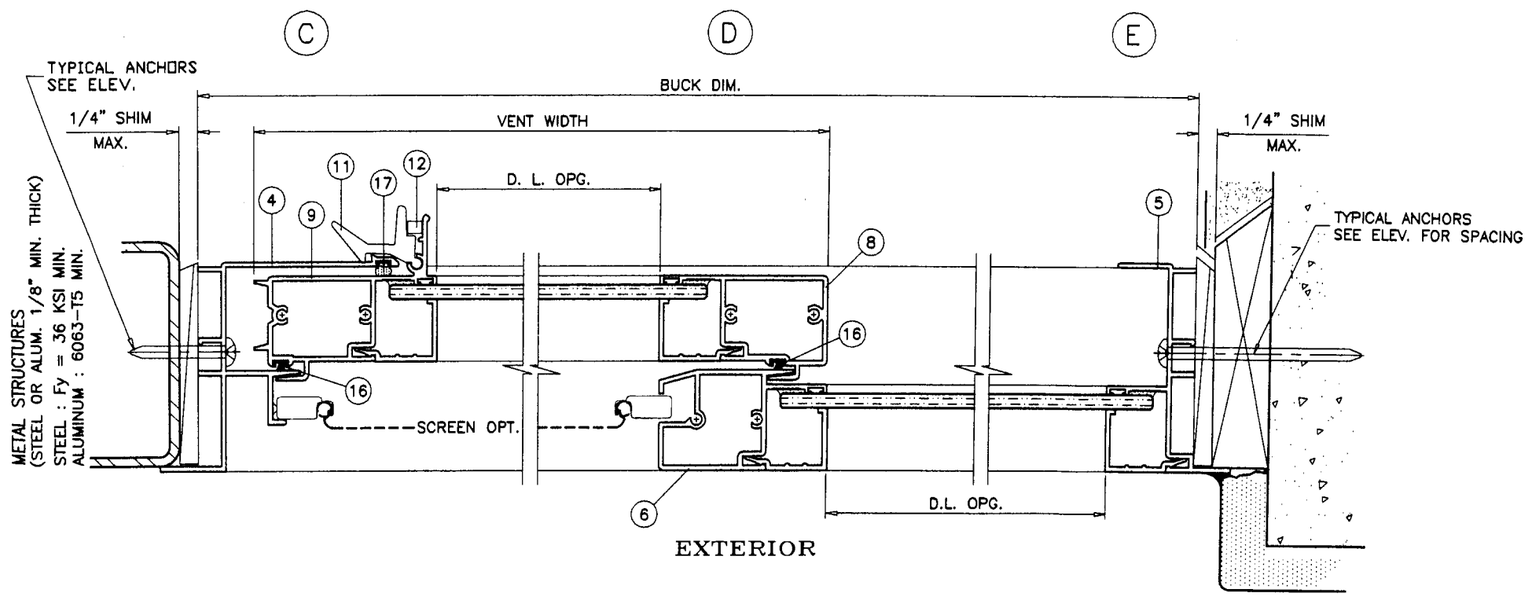

XO LAYOUT
OX OPPOSITE

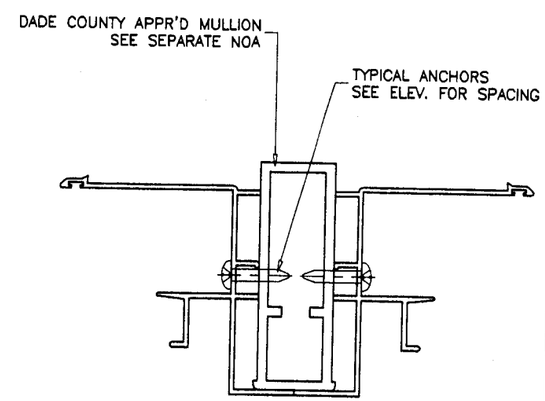

FLANGE FRAME WINDOW

Approved as complying with the Florida Building Code
Date 10/09/03
NOA# 03-0725.01
Miami Dade Product Control Division
By [signature]

Engr: DR. HUMAYOUN FAROOQ
STRUCTURES
FLA. PE # 16557
C.A.N. 3538
SEP 0 4 2003

AL-FAROOQ CORPORATION
ENGINEERS, PLANNERS & PRODUCT DESIGN
1235 SW 87 AVE
MIAMI, FLORIDA 33174
TEL. (305) 264-8100 FAX. (305) 262-6978
COMP-ANL\W03-50KL

UNMPRW ALUM HORIZONTAL ROLLING WINDOW (N.I.)

KINCO LTD.
5245 OLD KINGS ROAD
JACKSONVILLE, FL 32254
TEL. (800) 324-0244

revisions:

no	date	by	description
A	08.21.03		REV. PER BCCO COMMENTS

date: 06-30-03
scale: 1/2" = 1"
dr. by: HAMID
chk. by:

drawing no.
W03-50

sheet 6 of 10

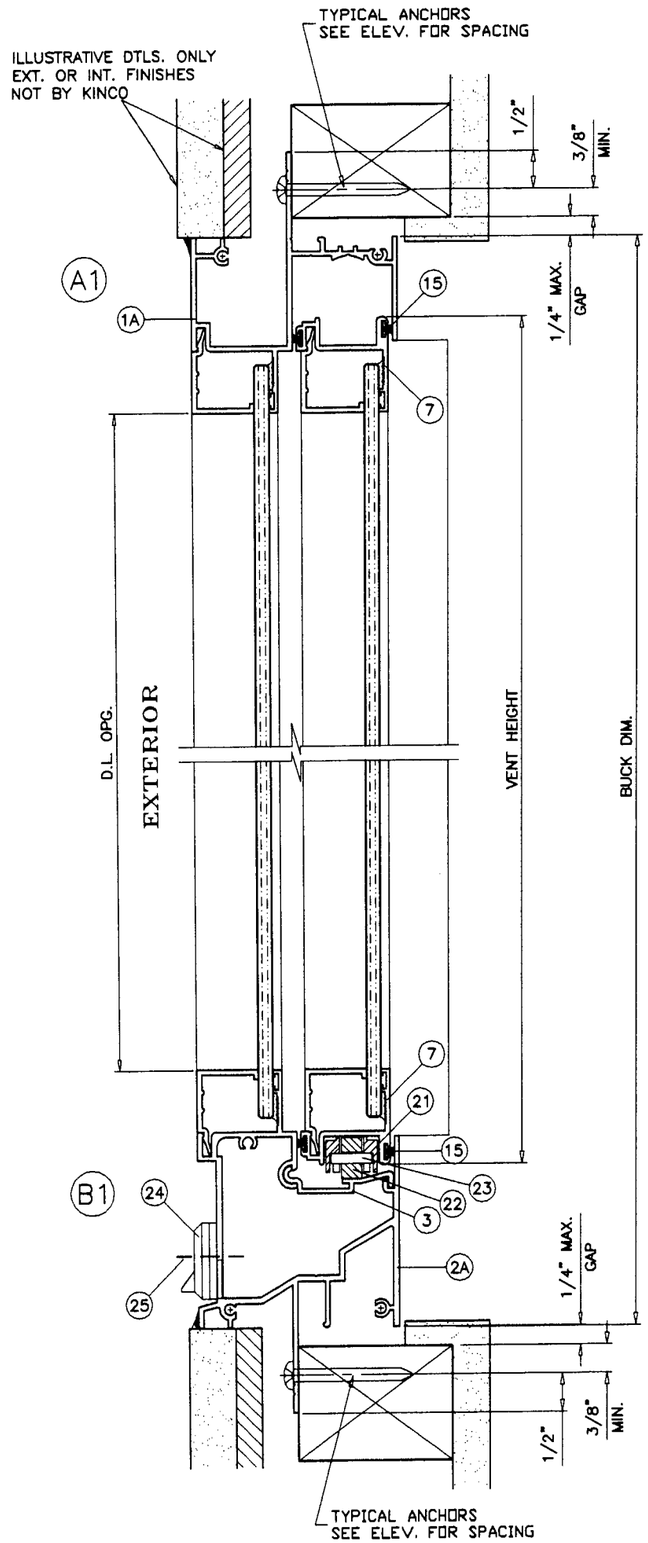

WOOD STRUCTURE NOT BY KINCO, MUST SUSTAIN LOADS IMPOSED BY GLAZING SYSTEM AND TRANSFER THEM TO THE BUILDING STRUCTURE.

TYPICAL ANCHORS: SEE ELEV. FOR SPACING

#10 SMS

INTO WOOD STRUCTURES
1-1/4" MIN. PENETRATION INTO WOOD

#10 SMS OR SELF DRILLING SCREWS

INTO DADE COUNTY APPROVED MULLIONS
(NO SHIM SPACE)

WEEPHOLES:

W1 = 1" X 1/4" WEEP HOLE WITH PLASTIC BAFFLE AT 5" FROM EACH END.

FIN FRAME WINDOW

Approved as complying with the Florida Building Code
Date 10/09/03
NOA# 03-0725.01
Miami-Dade Product Control Division
By: Guerdin Berman

Engr: DR. HUMAYOUN FAROOQ
STRUCTURES
FLA. PE # 16557
C.A.N. 3538

SEP 0 4 2003

AL-FAROOQ CORPORATION
ENGINEERS, PLANNERS & PRODUCT DESIGN
1235 SW 87 AVE
MIAMI, FLORIDA 33174
TEL. (305) 264-8100 FAX. (305) 262-6978

COMP-ANL\W03-50KL

UNMPRW ALUM HORIZONTAL ROLLING WINDOW (N.I.)

KINCO LTD.
5245 OLD KINGS ROAD
JACKSONVILLE, FL 32254
TEL. (800) 324-0244

revisions:

no	date	by	description
A	08.21.03		SHEET NUMBER CHANGED

date: 06-30-03
scale: 1/2" = 1"
dr. by: HAMID
chk. by:

drawing no.
W03-50

sheet 7 of 10

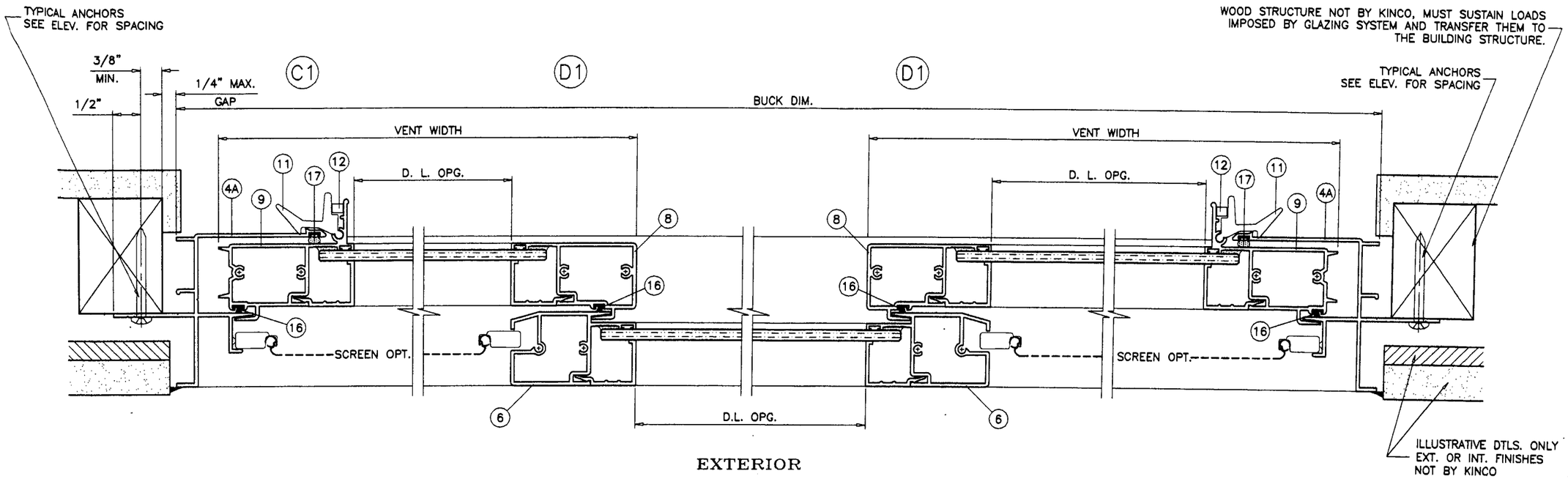

EXTERIOR

XOX LAYOUT

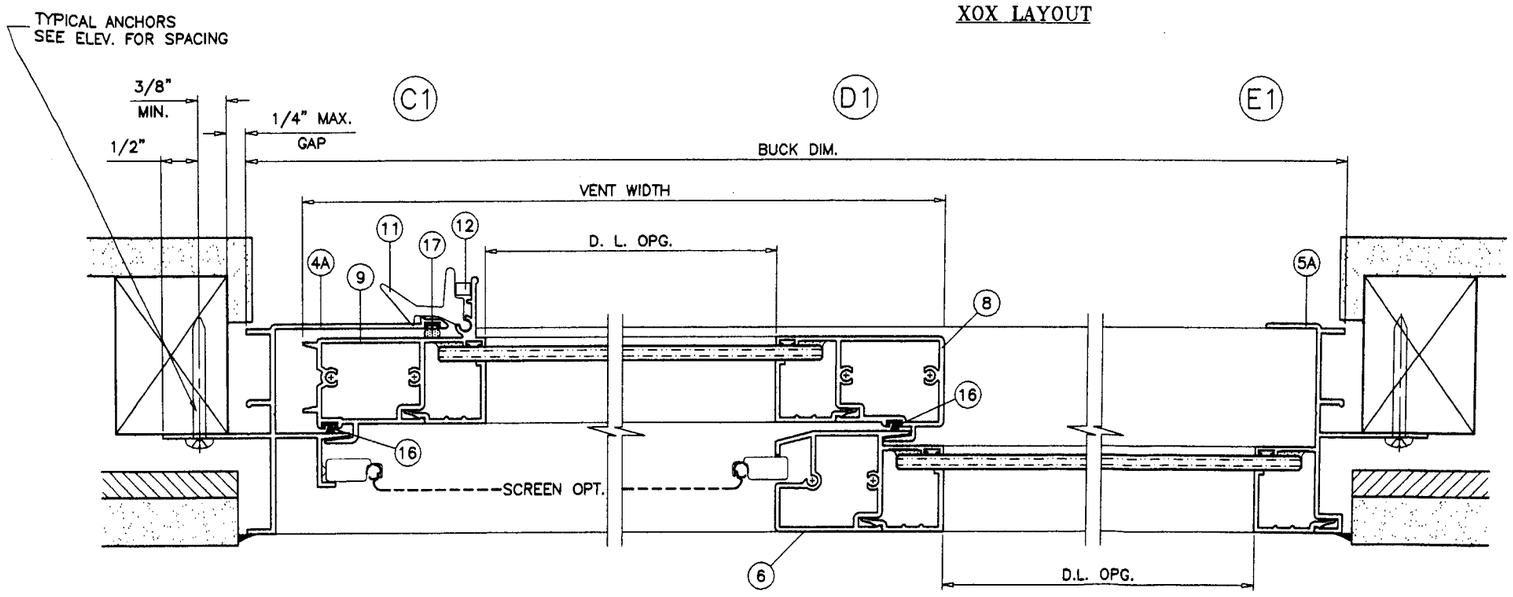

EXTERIOR

XO LAYOUT
OX OPPOSITE

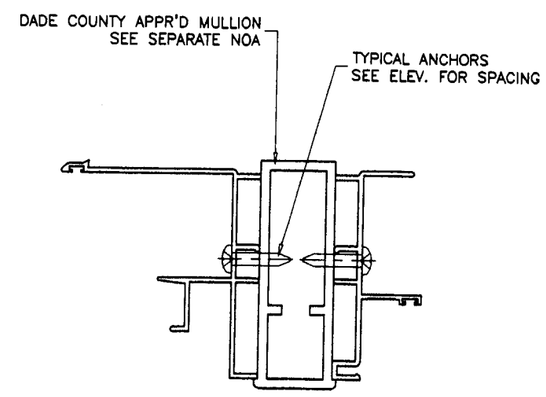

FIN FRAME WINDOW

Approved as complying with the Florida Building Code
Date 10/09/03
NOA# 03-0325.01
Miami Dade Product Control Division
By

Engr: DR. HUMAYOUN FAROOQ
STRUCTURES
FLA. PE # 16557
C.A.N. 3538

SEP 04 2003

AL-FAROOQ CORPORATION
ENGINEERS, PLANNERS & PRODUCT DESIGN
1235 SW 87 AVE
MIAMI, FLORIDA 33174
TEL. (305) 264-8100 FAX. (305) 262-6978

COMP-ANL\W03-50KL

UNMPRW ALUM HORIZONTAL ROLLING WINDOW (N.I.)

KINCO LTD.
5245 OLD KINGS ROAD
JACKSONVILLE, FL 32254
TEL (800) 324-0244

revisions:

no	date	by	description
A	08.21.03		SHEET NUMBER CHANGED

date: 06-30-03
scale: 1/2" = 1"
dr. by: HAMID
chk. by:

drawing no.
W03-50

sheet 8 of 10

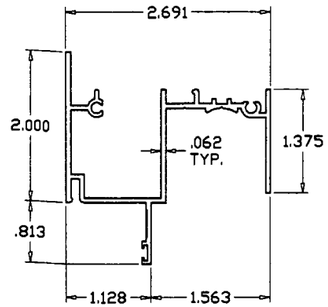

FRAME HEAD (FLANGE)

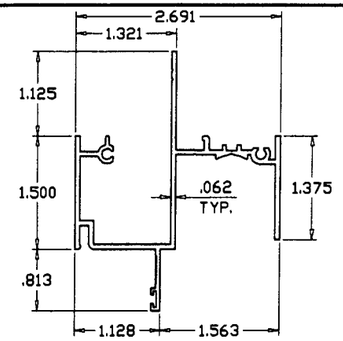

FRAME HEAD (FIN)

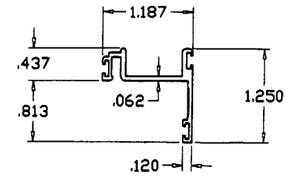

VENT TOP/BOTTOM RAIL

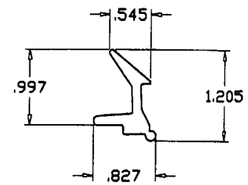

VENT LATCH

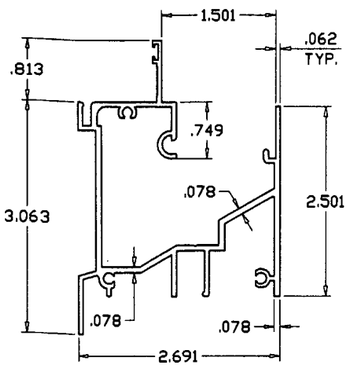

FRAME SILL (FLANGE)

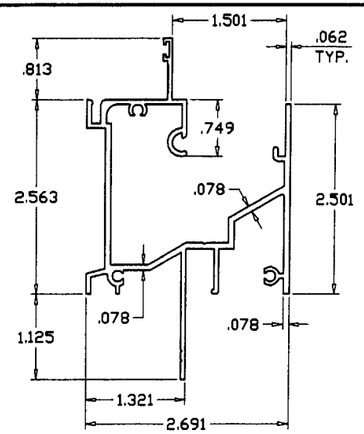

FRAME SILL (FIN)

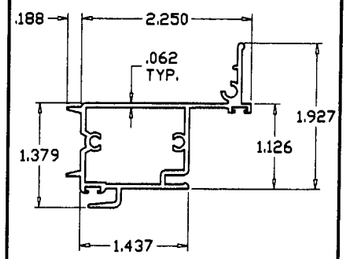

JAMB STILE

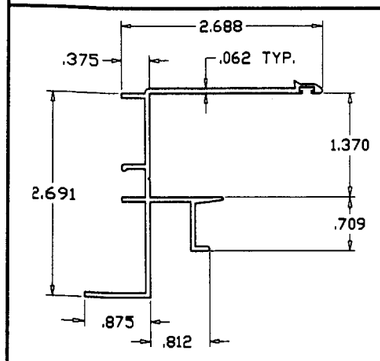

FRAME JAMB (FLANGE)

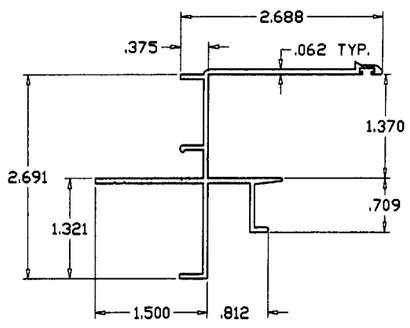

FRAME JAMB (FIN)

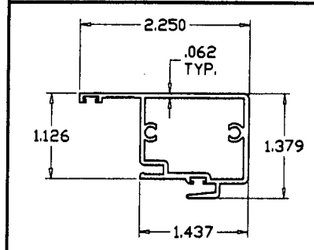

MEETING RAIL

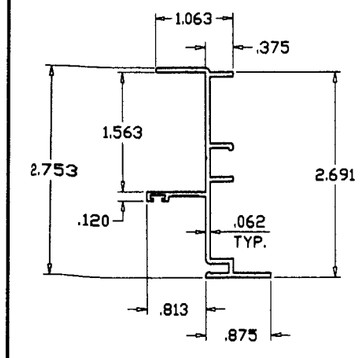

FIXED FRAME JAMB (FLANGE)

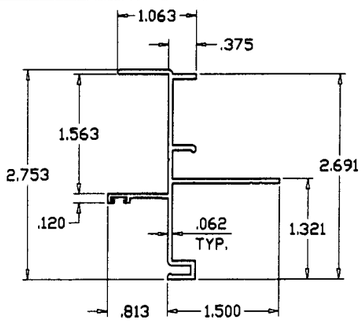

FIXED FRAME JAMB (FIN)

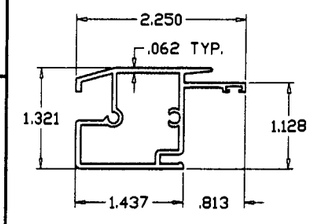

FIXED MTG. RAIL

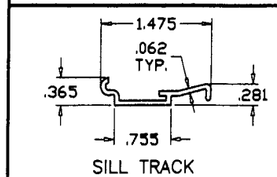

SILL TRACK

ITEM #	PART #	QUANTITY	DESCRIPTION	MATERIAL	MANF./SUPPLIER/REMARKS
1	KCO-2043	1	FRAME HEAD - FLANGE	6063-T6	-
1A	KCO-2053	1	FRAME HEAD - FIN	6063-T6	-
2	KCO-271	1	FRAME SILL - FLANGE	6063-T6	-
2A	KCO-272	1	FRAME SILL - FIN	6063-T6	-
3	KCO-273	1	SILL TRACK	6063-T6	-
4	KCO-2042	1	FRAME JAMB - VENT - FLANGE	6063-T6	-
4A	KCO-2052	1	FRAME JAMB - VENT - FIN	6063-T6	-
5	KCO-241	1	FRAME JAMB - FIXED - FLANGE	6063-T6	-
5A	KCO-2051	1	FRAME JAMB - FIXED - FIN	6063-T6	-
6	KCO-2044	1/VENT	FIXED MTG. RAIL	6063-T6	-
7	KCO-2047	2/VENT	VENT TOP & BOTT. RAIL	6063-T6	-
8	KCO-2045	1/VENT	VENT INTERLOCK	6063-T6	-
9	KCO-2046	1/VENT	VENT JAMB STILE	6063-T6	-
10	RP-920	4/ LITE	GLAZING BEAD 1/8" GLASS	RIGID PVC	-
10A	RP-919	4/ LITE	GLAZING BEAD 3/16" GLASS	RIGID PVC	-
10B	RP-921	4/ LITE	GLAZING BEAD 1/4" GLASS	RIGID PVC	-
11	L-049	2/ VENT	SNAP LATCH, 2-5/8" LONG	NYLON	AT 6" & 48" FROM BOTTOM
12	-	1/LATCH	LEAF SPRING	ST. STEEL	-
13	-	-	-	-	-
14	-	-	-	-	-
15	E23151NG	AS REQD.	FIN SEAL WEATHERSTIP	-	ULTRAFAB .187 X .150 OR EQUIV.
16	W23171NG	AS REQD.	FIN SEAL WEATHERSTIP	-	ULTRAFAB .187 X .170 OR EQUIV.
17	U-4333	AS REQD.	BULB WEATHERSTRIPPING	-	QLON .190 X .300
18	-	AS REQD.	ASSY SCREWS	-	#8 x 1" PH SMS
19	-	2/VENT	FIXED RAIL SCREW-SILL	-	#8 x 3" PH SMS
20	-	-	-	-	-
21	-	2/PANEL	ROLLER HOUSING & GUIDE	DELRIN	AT EACH END OF VENT
22	-	4/PANEL	ROLLER	BRASS	-
23	-	4/PANEL	ROLLER SHAFT	ST. STEEL	-
24	-	2/WINDOW	BAFFLE	NYLON	AT 4" FROM EACH END
25	-	2/BAFFLE	BAFFLE SCREWS	-	#6 x 1/2 SMS

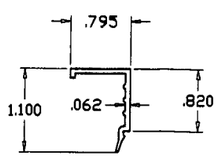

GLAZING BEAD
1/4" GLASS

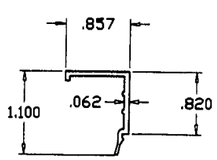

GLAZING BEAD
3/16" GLASS

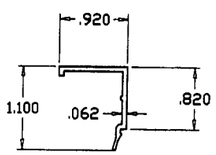

GLAZING BEAD
1/8" GLASS

Approved as complying with the Florida Building Code
Date 10/09/03
NOA# 03-0723.01
Miami Dade Product Control Division
By

Engr: DR. HUMAYOUN FAROOQ
STRUCTURES
FLA. PE # 16557
C.A.N. 3538

SEP 0 4 2003

AL-FAROOQ CORPORATION
ENGINEERS, PLANNERS & PRODUCT DESIGN
1235 SW 87 AVE
MIAMI, FLORIDA 33174
TEL. (305) 264-8100 FAX. (305) 262-6978

COMP-ANL\W03-50KL

UNMPRW ALUM HORIZONTAL ROLLING WINDOW (N.I.)

KINCO LTD.
5245 OLD KINGS ROAD
JACKSONVILLE, FL 32254
TEL. (800) 324-0244

revisions:

no	date	by	description
A	08.21.03		REV. PER BCCO COMMENTS

date: 06-30-03
scale: 1/2" = 1"
dr. by: HAMID
chk. by:

drawing no.
W03-50

sheet 9 of 10

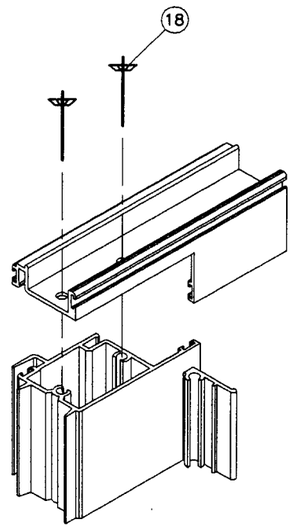

VENT TOP/BOTTOM CORNERS

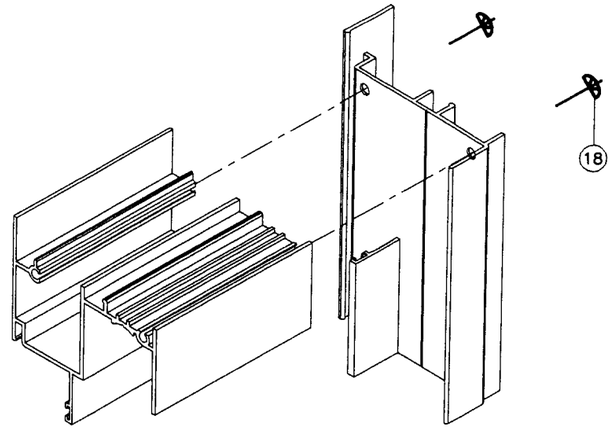

FLANGE FRAME TOP CORNER

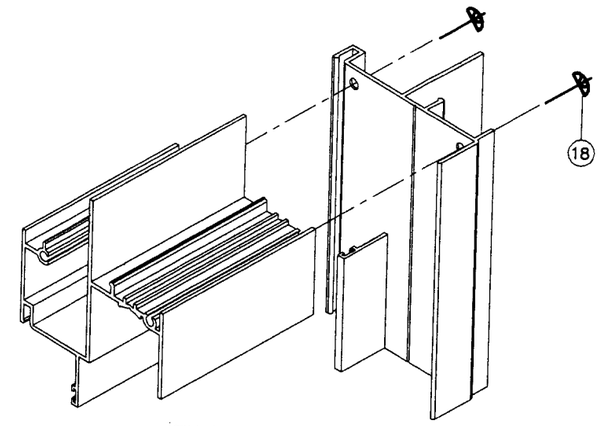

FIN FRAME TOP CORNER

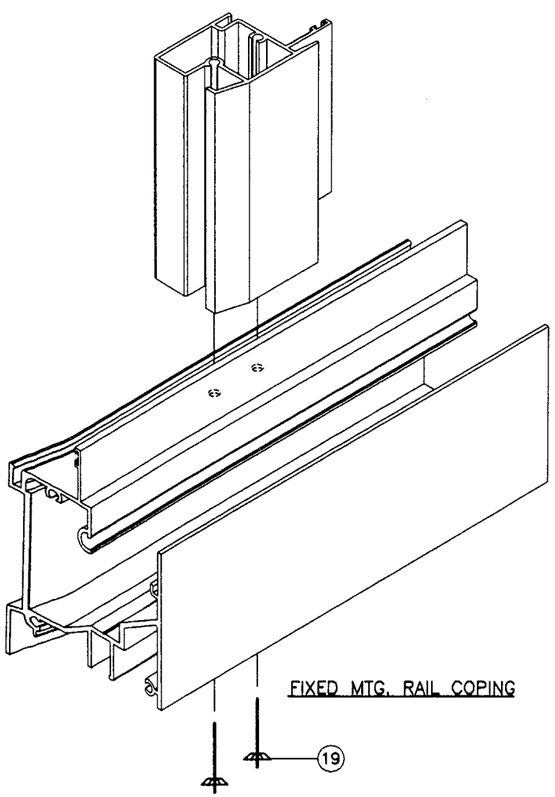

FIXED MTG. RAIL COPING

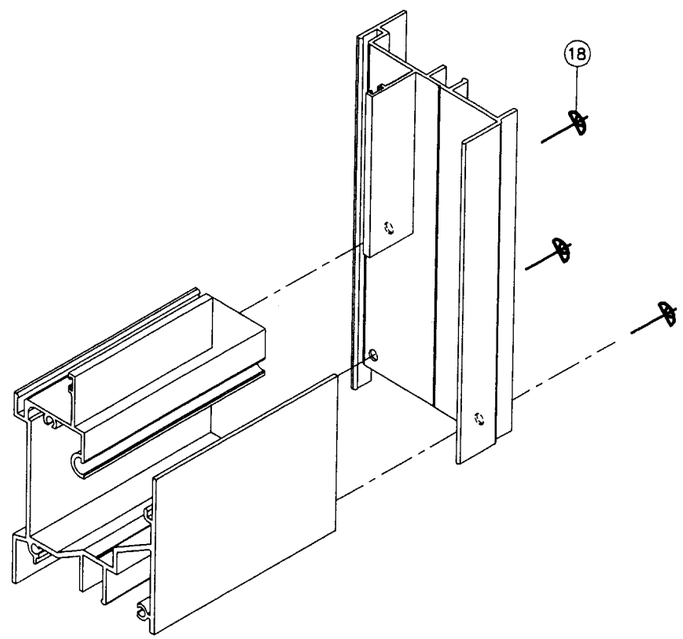

FLANGE FRAME BOTTOM CORNER

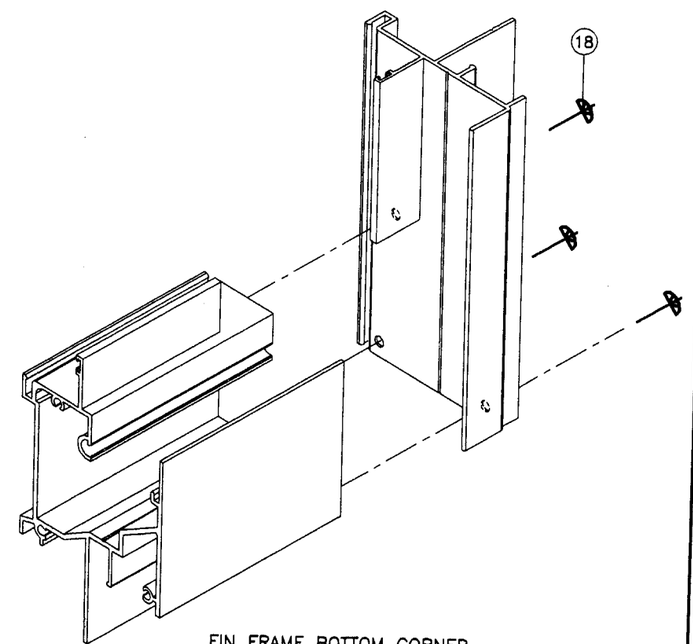

FIN FRAME BOTTOM CORNER

Approved as complying with the Florida Building Code
Date 10/09/03
NOA# 03-0925.01
Miami Dade Product Control Division
By [signature]

Engr: DR. HUMAYOUN FAROOQ
STRUCTURES
FLA. PE # 16557
C.A.N. 3538

SEP 04 2003

AL-FAROOQ CORPORATION
ENGINEERS, PLANNERS & PRODUCT DESIGN
1235 SW 87 AVE
MIAMI, FLORIDA 33174
TEL. (305) 264-8100 FAX. (305) 262-6978

COMP-ANL\W03-50KL

UNMPRW ALUM HORIZONTAL ROLLING WINDOW (N.I.)

KINCO LTD.
5245 OLD KINGS ROAD
JACKSONVILLE, FL 32254
TEL. (800) 324-0244

revisions:

no	date	by	description
A	08.21.03		REV. PER BCCO COMMENTS

date: 06-30-03
scale: 1/2" = 1"
dr. by: HAMID
chk. by:

drawing no.
W03-50

sheet 10 of 10