MIAMI-DADE

BUILDING CODE COMPLIANCE OFFICE (BCCO)
PRODUCT CONTROL DIVISION

MIAMI-DADE COUNTY, FLORIDA
METRO-DADE FLAGLER BUILDING
140 WEST FLAGLER STREET, SUITE 1603
MIAMI, FLORIDA 33130-1563
(305) 375-2901 FAX (305) 375-2908

NOTICE OF ACCEPTANCE (NOA)

Therma-Tru Corporation
108 Mutzfeld Road
Butler, IN 46721

SCOPE:

This NOA is being issued under the applicable rules and regulations governing the use of construction materials. The documentation submitted has been reviewed by Miami-Dade County Product Control Division and accepted by the Board of Rules and Appeals (BORA) to be used in Miami Dade County and other areas where allowed by the Authority Having Jurisdiction (AHJ).

This NOA shall not be valid after the expiration date stated below. The Miami-Dade County Product Control Division (In Miami Dade County) and/or the AHJ (in areas other than Miami Dade County) reserve the right to have this product or material tested for quality assurance purposes. If this product or material fails to perform in the accepted manner, the manufacturer will incur the expense of such testing and the AHJ may immediately revoke, modify, or suspend the use of such product or material within their jurisdiction. BORA reserves the right to revoke this acceptance, if it is determined by Miami-Dade County Product Control Division that this product or material fails to meet the requirements of the applicable building code.

This product is approved as described herein, and has been designed to comply with the High Velocity Hurricane Zone of the Florida Building Code.

DESCRIPTION: Premium Series 8'0 Inswing W/E Opaque Insulated Steel Door w/Sidelites

APPROVAL DOCUMENT: Drawing No. **S-2348**, titled "Premium Series w & w/o Sidelites up to 8-0 x 8-4 Inswing Unit", sheets 1 through 9 of 9, dated 7/14/03 with revision #1 dated 10/1/03, prepared by RW Building Consultants, Inc., signed and sealed by Lyndon F. Schmidt, P.E., bearing the Miami-Dade County Product Control Approval stamp with the Notice of Acceptance number and approval date by the Miami-Dade County Product Control Division.

MISSILE IMPACT RATING: Large Missile Impact Resistant (Doors only)

LABELING: Each unit shall bear a permanent label with the manufacturer's name or logo, city, state and following statement: "Miami-Dade County Product Control Approved", unless otherwise noted herein.

RENEWAL of this NOA shall be considered after a renewal application has been filed and there has been no change in the applicable building code negatively affecting the performance of this product.

TERMINATION of this NOA will occur after the expiration date or if there has been a revision or change in the materials, use, and/or manufacture of the product or process. Misuse of this NOA as an endorsement of any product, for sales, advertising or any other purposes shall automatically terminate this NOA. Failure to comply with any section of this NOA shall be cause for termination and removal of NOA.

ADVERTISEMENT: The NOA number preceded by the words Miami-Dade County, Florida, and followed by the expiration date may be displayed in advertising literature. If any portion of the NOA is displayed, then it shall be done in its entirety.

INSPECTION: A copy of this entire NOA shall be provided to the user by the manufacturer or its distributors and shall be available for inspection at the job site at the request of the Building Official.

This NOA consists of this page 1 and evidence pages E-1 and E-2, as well as approval document mentioned above.

The submitted documentation was reviewed by **Manuel Perez, P.E.**

PRODUCT CONTROL ACCEPTED

NOA No 03-0818.02
Expiration Date: December 18, 2008
Approval Date: December 18, 2003

Therma-Tru Corporation

NOTICE OF ACCEPTANCE: EVIDENCE SUBMITTED

A. DRAWINGS

1. Manufacturer's die drawings and sections.
2. Drawing No. **S-2348**, titled "Premium Series w & w/o Sidelites up to 8-0 x 8-4 Inswing Unit", sheets 1 through 9 of 9, dated 7/14/03 with revision #1 dated 10/1/03, prepared by RW Building Consultants, Inc., signed and sealed by Lyndon F. Schmidt, P.E.

B. TESTS:

1. Test reports on 1) Air Infiltration Test, per FBC TAS 202-94
   2) Uniform Static Air Pressure Test, Loading per FBC TAS 202-94
   3) Water Resistance Test, per FBC TAS 202-94
   4) Large Missile Impact Test per FBC, TAS 201-94
   5) Cyclic Wind Pressure Loading per FBC, TAS 203-94
   6) Forced Entry Test, per FBC TAS 202-94.

   along with installation diagram of a steel entrance door and sidelights prepared by ETC Laboratories. test report No. **ETC-01-741-11210.0** dated April 23, 2003 signed and sealed by Mark D. Passero, P.E.

C. CALCULATIONS

1. Anchor calculations dated 4/23/03 prepared by RW Building Consultants, Inc., signed and sealed by Lyndon F. Schmidt, P.E. Complies with ASTM E1300-98.

D. QUALITY ASSURANCE

1. Miami Dade Building Code Compliance Office (BCCO).

E. MATERIAL CERTIFICATIONS

1. Test report on "Standard Test Method for Surface Burning Characteristics of Buiding Materials", per ASTM E84-00a forflame spread and smoke development of Therma-Tru Corporation Construction Series Insulated Steel Door Panel, conducted by Omega Point Laboratories, Test Report No. **15427-107362**, dated August 28, 2000.
2. Notice of Acceptance No. **01-1120.08** issued to Therma-Tru Corporation for their "Therma-Tru Series BTS, TCM,. PVC, SMC Lite Frames, approved on 01/18/02 and expiring on 01/18/07.

Manuel Perez, P.E.
Product Control Examiner
NOA No 03-0818.02
Expiration Date: December 18, 2008
Approval Date: December 18, 2003

F. STATEMENTS

1. Statement letter of conformance and of no financial interest, dated April 21, 2003, signed and sealed by Lyndon F. Schmidt, P.E.
2. Statement letter of no financial interest, dated March 12, 2003, signed by Steve Jasperson, Project Scientist, Therma-Tru Corporation.

G. OTHER

1. None.

Manuel Perez, P.E.
Product Control Examiner
NOA No 03-0818.02
Expiration Date: December 18, 2008
Approval Date: December 18, 2003

THERMA-TRU CORPORATION

108 MUTZFEILD ROAD BUTLER, INDIANA 46712 PH. (260) 868-5811

"PREMIUM SERIES"
INSWING WOOD EDGE STEEL DOOR
UP TO 8'0 x 8'4 W/ & W/O SIDELITES

GENERAL NOTES

1. THIS PRODUCT IS DESIGNED TO COMPLY WITH THE HVHZ FLORIDA BUILDING CODE
2. WOOD BUCKS MUST BE ANCHORED PROPERLY TO TRANSFER LOADS TO THE STRUCTURE AND BE REVIEWED BY BUILDING OFFICIAL.
3. PRODUCT ANCHORS SHALL BE AS LISTED AND SPACED AS SHOWN ON DETAILS. ANCHOR EMBEDMENT TO BASE MATERIAL BEYOND WALL DRESSING OR STUCCO.
4. DESIGNED PRESSURE RATINGS SEE TABLES BENEATH THE ELEVATIONS.
5. THIS PRODUCT DOES NOT MEET THE WATER REQUIREMENTS FOR "HIGH VELOCITY HURRICANE ZONES" UNLESS THE ROOF OVERHANG IS EQUAL TO OR GREATER THAN THE HEIGHT OF THE WALL WHERE THE DOOR IS LOCATED.
6. THIS SYSTEM REQUIRES WINDBORNE DEBRIS EXTERNAL PROTECTION AS PRESCRIBED IN SECTION 1626 OF THE FLORIDA BUILDING CODE AT SIDELITES ONLY.
7. SIDELITES ARE AN OPTION AND CAN BE USED IN A SINGLE OR DOUBLE CONFIGURATION.

ALL MODELS ARE VIEWED FROM INTERIOR

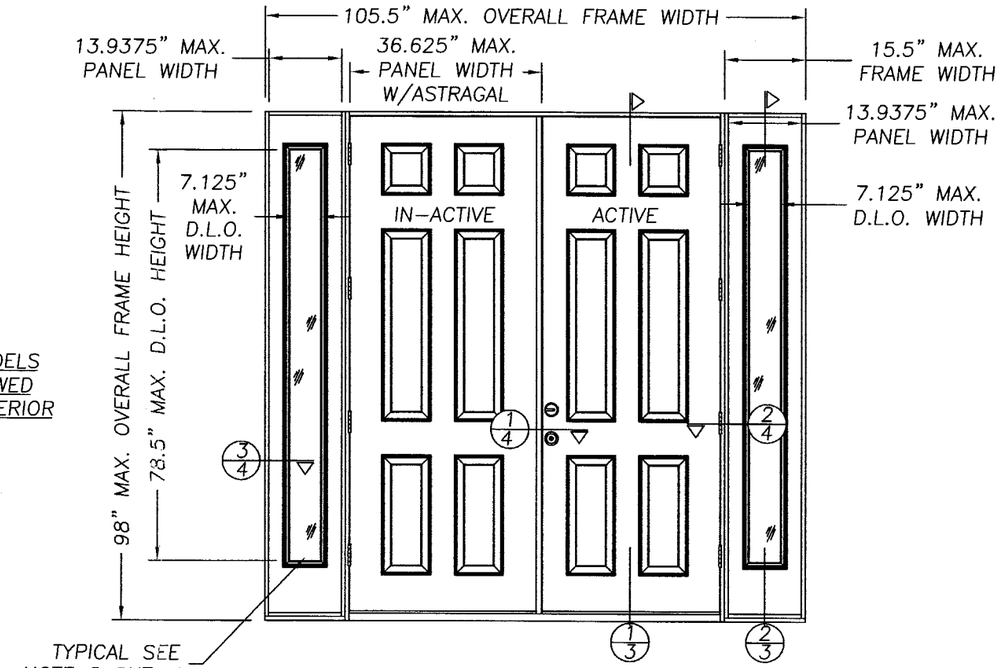

DOUBLE W/SIDELITES INSWING UNIT

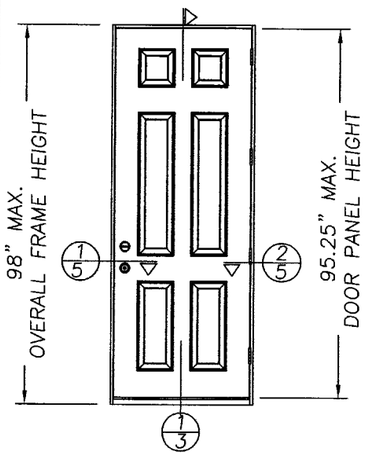

SINGLE INSWING UNIT

DESIGN PRESSURES
+ 60.0 PSF / -60.0 PSF

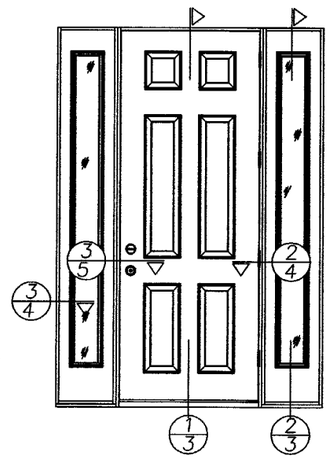

SINGLE W/SIDELITES INSWING UNIT

DESIGN PRESSURES
+ 60.0 PSF / -60.0 PSF

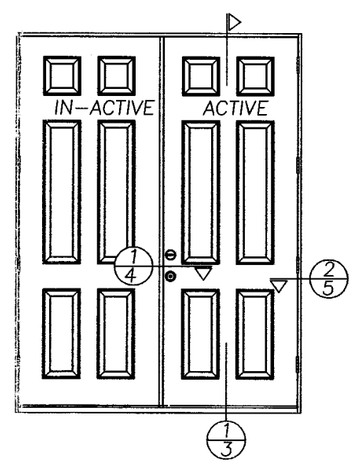

DOUBLE INSWING UNIT

DESIGN PRESSURES
+ 60.0 PSF / -60.0 PSF

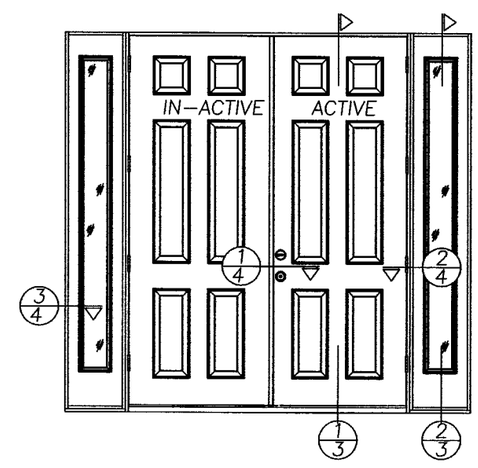

DOUBLE W/SIDELITES INSWING UNIT

DESIGN PRESSURES
+ 60.0 PSF / -60.0 PSF

TABLE OF CONTENTS

SHEET #	DESCRIPTION	SHEET #	DESCRIPTION
1	TYPICAL ELEVATIONS & GENERAL NOTES	6	ANCHORING LOCATIONS & DETAILS
2	DOOR PANEL & FRAME CONSTRUCTION	7	ANCHORING LOCATIONS & GLAZING DETAILS
3	VERTICAL CROSS SECTIONS	8	UNIT COMPONENTS
4	HORIZONTAL CROSS SECTIONS	9	UNIT COMPONENTS & BILL OF MATERIALS
5	HORIZONTAL CROSS SECTIONS & NOTES		

Approved as complying with the Florida Buiding Code
Date DEC. 18, 2003
NOA# 03-0818.02
Miami Dade Product Control Division
By Manuel Perez

Product Evaluation Documents Prepared By:
RW BUILDING CONSULTANTS, INC.
P.O. Box 230 Valrico FL. 33595
Phone No.: 813.659.9197
Florida Board of Professional Engineers
Certificate Of Authorization No. 9813
10/01/03
Lyndon F. Schmidt, P.E. No. 43409

PRODUCT: "PREMIUM SERIES" W & W/OUT SIDELITES UP TO 8-0 x 8-4 INSWING UNIT

PART OR ASSEMBLY: TYPICAL ELEVATIONS & GENERAL NOTES

NO.	DATE	REVISIONS	BY
1	10/1/03	PER DADE LETTER	TJH

DATE: 7/14/03
SCALE: N.T.S.
DWG. BY: TJH
CHK. BY: RW
DRAWING NO.: S-2348
SHEET 1 OF 9

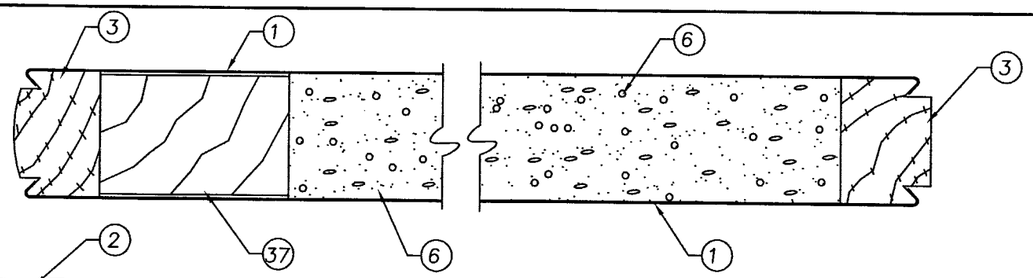

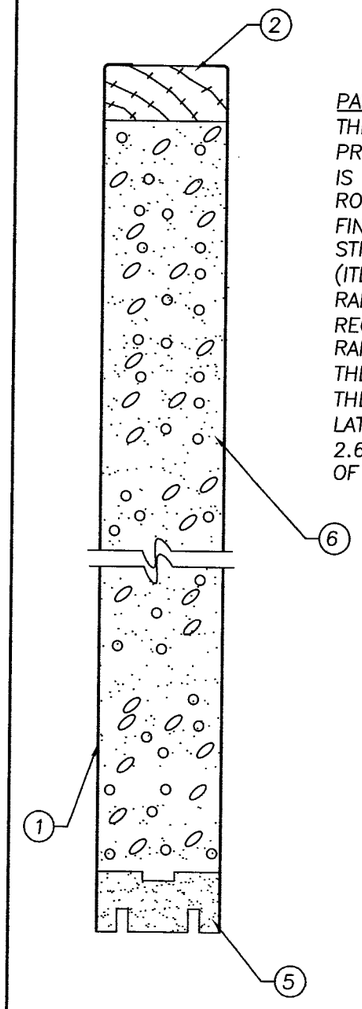

PANEL CONSTRUCTION

THE PANEL IS CONSTRUCTED FROM 24 gA. (0.022" MIN. THK.) GALVANIZED AND PRIME-COATED STEEL FACE SHEETS (ITEM #1). THE INTERIOR CAVITY OF EACH DOOR IS FILLED WITH BASF POLYURETHANE FOAM (ITEM #6). THE FACE SHEET EDGES ARE ROLL FORMED TO FORM A MECHANICAL INTERLOCK WITH THE HINGE AND LATCH FINGER JOINTED PINE STILES (ITEM #'S 3&4), (1.234" THK. x 1.625" WIDE). THE STILES ARE MACHINED TO INTERLOCK WITH THE STEEL FACE SHEETS. THE TOP RAIL (ITEM #2) IS FINGER JOINTED PINE (0.851"THK. x 1.625" WIDE) AND THE BOTTOM RAIL (ITEM #5) IS WOOD COMPOSITE (0.836" THK. x 1.625" WIDE) AND KERFED TO RECIEVE A DOOR SWEEP (SWEEP USED ON IN-SWING MODELS ONLY). THE STILES AND RAILS ARE PRESSURE FITTED AND ADHESIVELY BONDED TO THE STEEL FACE SHEETS. THE HINGE STILE WAS MORTISED AT 8.375", 37.625" AND 66.875" FROM THE TOP OF THE DOOR PANEL TO RECIEVE (3) THERMA-TRU 4.0" x 4.0" BUTT TYPE HINGES. THE LATCH STILE WAS REINFORCED WITH A WOOD LOCK BLOCK (ITEM #37) MEASURING 2.625" WIDE 10.375" LONG x 1.625" THK. AND LOCATED AT 31.625" FROM THE TOP OF THE DOOR PANEL.

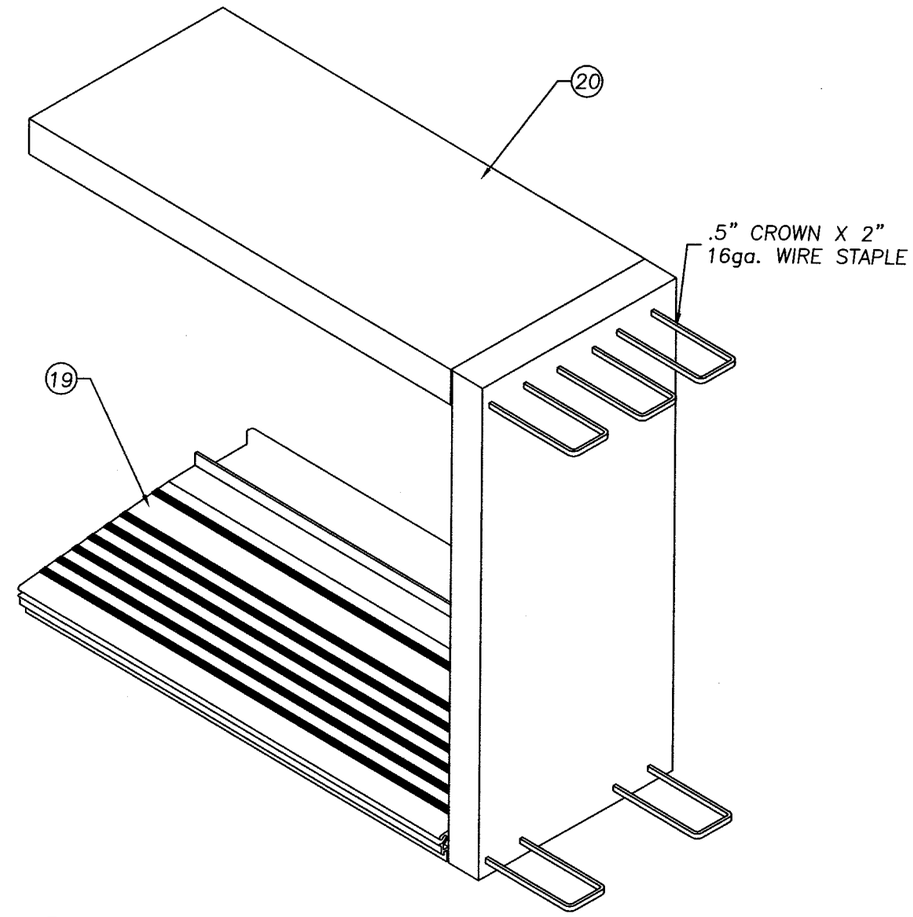

FRAME CONSTRUCTION

THE DOOR FRAME AND SIDELITE FRAME HEAD JAMBS AND SIDE JAMBS ARE FINGER JOINTED PINE MEASURING 4.5625" x 1.25". THE HEAD JAMBS AND SIDE JAMBS ARE FINGER JOINTED PINE MEASURING 4.5625" x 1.25". THE HEAD JAMB AND SIDE JAMBS ARE MORTISED, BUTTED AND JOINED USING (3) 0.5" CROWN x 2.0" 16 ga. WIRE STAPLES AT EACH END.THE FOLLOWING THRESHOLDS WERE TESTED: THERMA-TRU ALUM OUT-SWING BUMP AND THERMA TRU ALUM. HIGH DAM BUMP. MEASURING 4.625" x .837" AND ATTACHED TO THE JAMB WITH (2) 0.5" CROWN x 2.5" 16ga. WIRE STAPLES AT EACH END. THE FRAME WAS AFFIXED WITH AN ADD-ON HIGH DAM SILL THAT INCREASED THE HEIGHT OF THE ORIGINAL BUMP THRESHOLD TO 1.875" AT THE INNER MOST PLANE OF THE FRAME SYSTEM.

Approved as complying with the Florida Building Code
Date DEC. 18, 2003
NOA# 03-0818.02
Miami Dade Product Control Division
By Manuel Perez

Product Evaluation Documents Prepared By:
RW BUILDING CONSULTANTS, INC.
P.O. Box 230 Valrico FL. 33595
Phone No.: 813.659.9197
Florida Board of Professional Engineers
Certificate Of Authorization No. 9813
10/01/03
Lyndon F. Schmidt, P.E. No. 43409

PRODUCT: "PREMIUM SERIES" W & W/OUT SIDELITES UP TO 8-0 x 8-4 INSWING UNIT

PART OR ASSEMBLY: DOOR PANEL & FRAME CONSTRUCTION

REVISIONS

NO.	DATE		BY
1	10/1/03	PER DADE LETTER	TJH

DATE: 7/14/03
SCALE: N.T.S.
DWG. BY: TJH
CHK. BY: RW
DRAWING NO.: S-2348
SHEET 2 OF 9

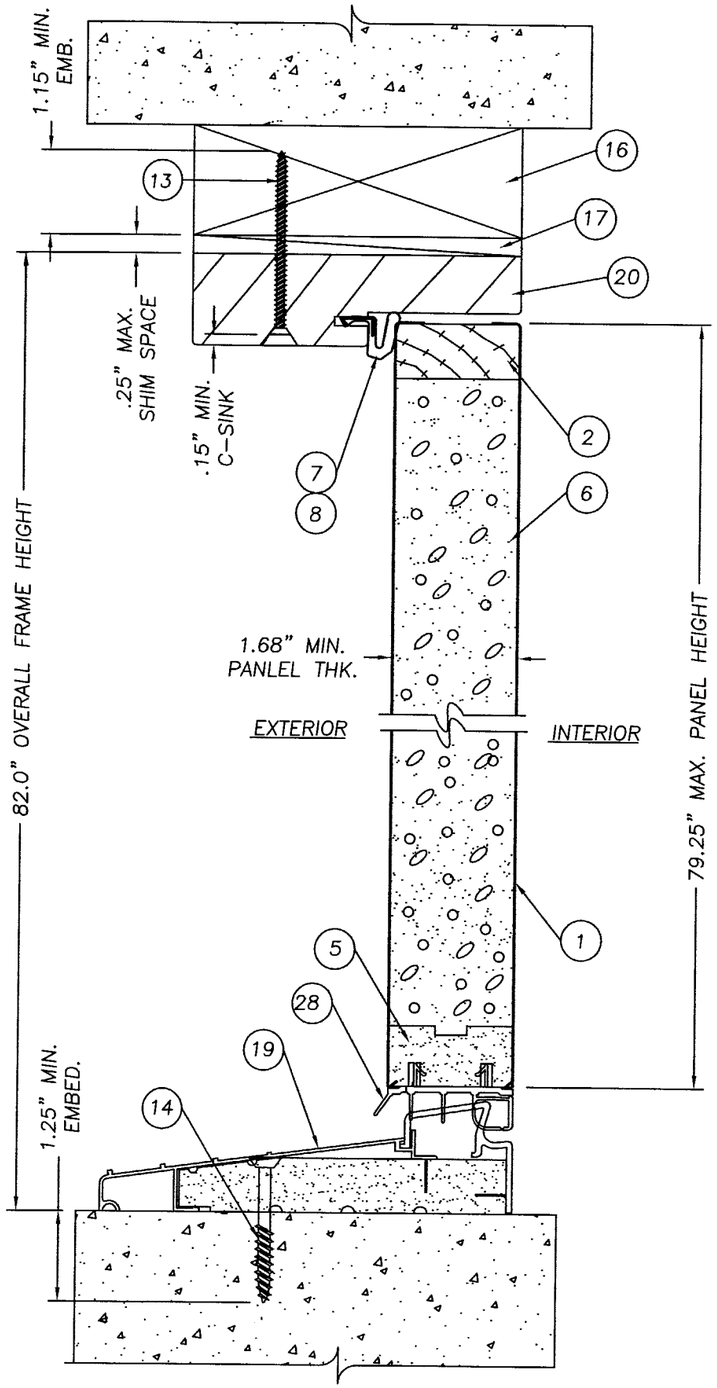

1/3 VERTICAL CROSS SECTION
DOOR PANEL W/ SELF ADJUSTING SADDLE THRESHOLD

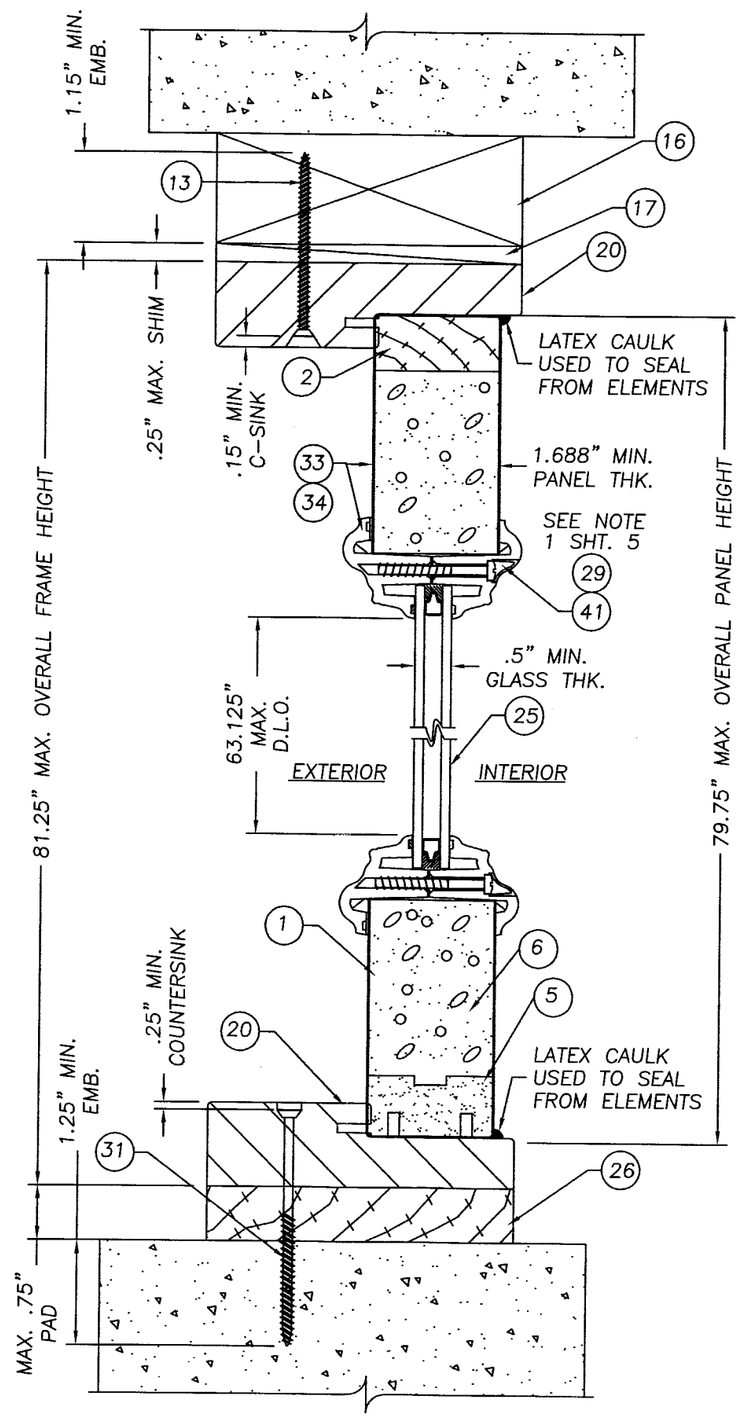

2/3 VERTICAL CROSS SECTION
SIDELITE PANEL

Approved as complying with the Florida Building Code
Date DEC. 18, 2003
NOA# 03-0818.02
Miami Dade Product Control Division
By Manuel Perez

Product Evaluation Documents Prepared By:
RW BUILDING CONSULTANTS, INC.
P.O. Box 230 Valrico FL. 33595
Phone No.: 813.659.9197
Florida Board of Professional Engineers
Certificate of Authorization No. 9813
10/01/03
Lyndon F. Schmidt, P.E. No. 43409

PRODUCT: "PREMIUM SERIES" W & W/OUT SIDELITES UP TO 8-0 x 8-4 INSWING UNIT

PART OR ASSEMBLY: VERTICAL CROSS SECTIONS

NO.	DATE	REVISIONS	BY
1	10/1/03	PER DADE LETTER	TJH

DATE: 7/14/03
SCALE: N.T.S.
DWG. BY: TJH
CHK. BY: RW
DRAWING NO.: S-2348
SHEET 3 OF 9

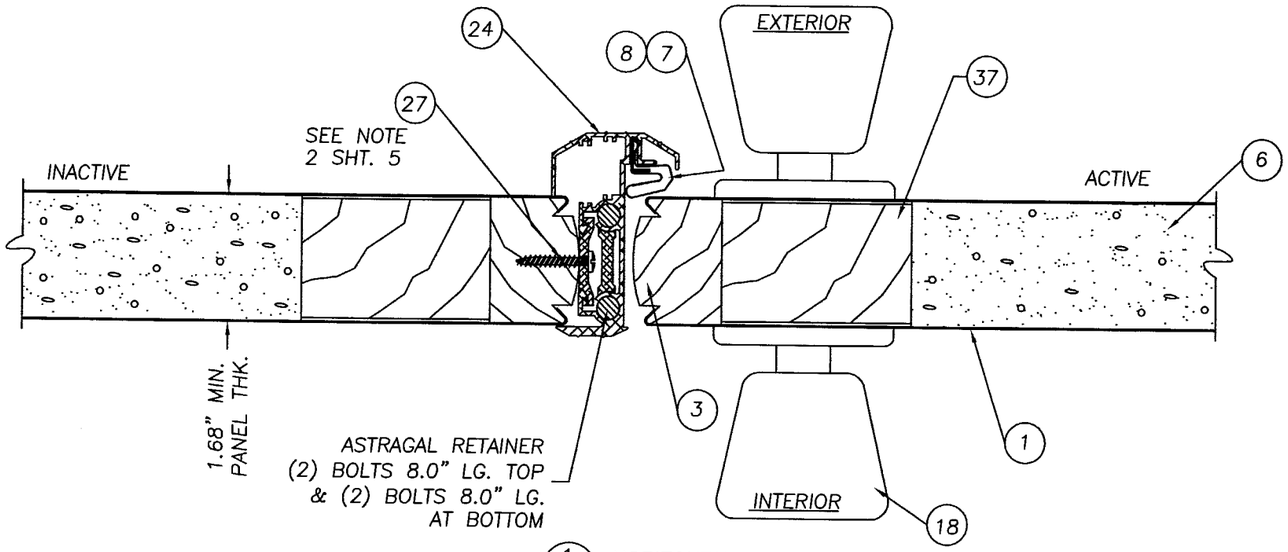

1/4 HORIZONTAL CROSS SECTION @ ASTRAGAL

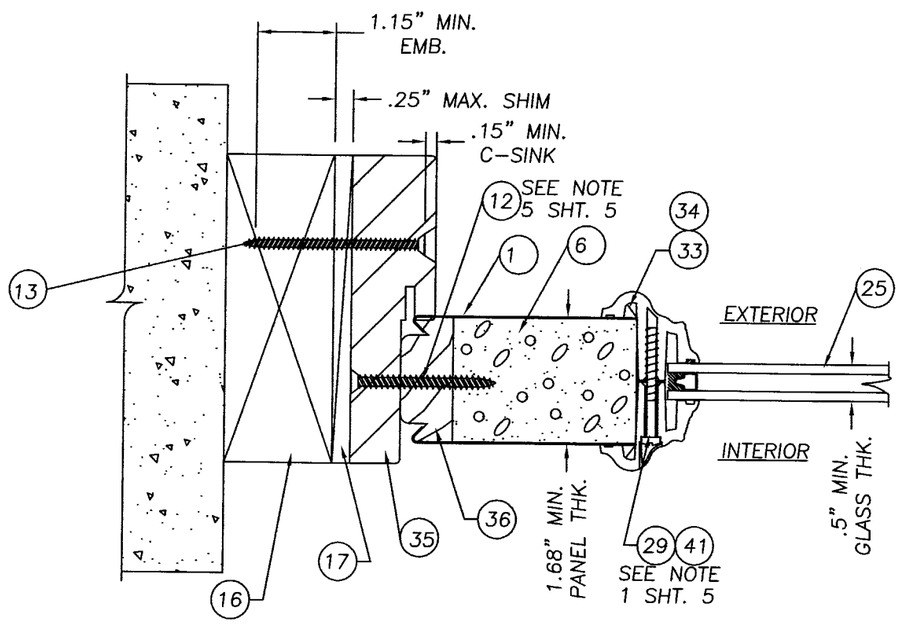

3/4 HORIZONTAL CROSS SECTION @ SIDELITE TO BUCK

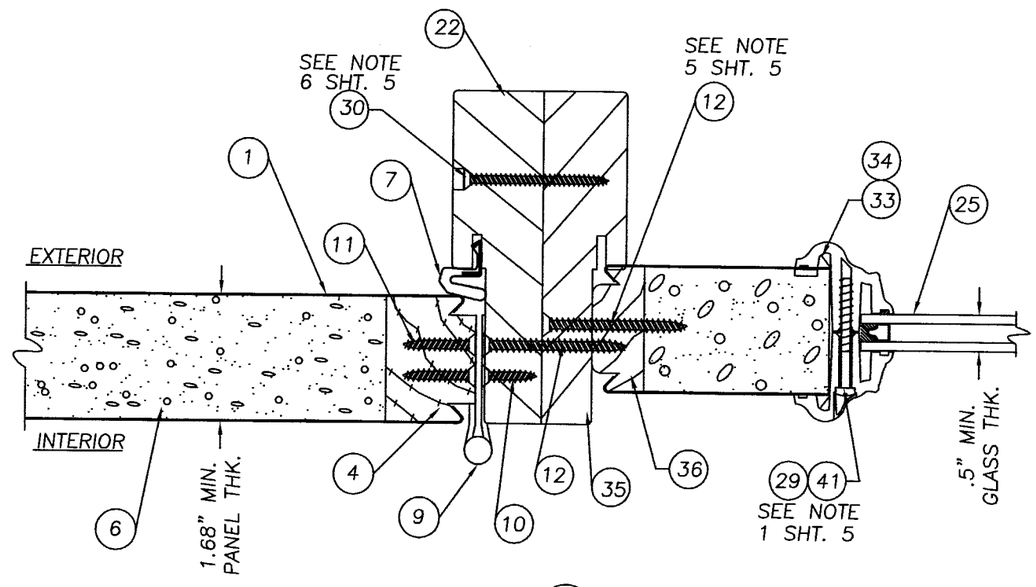

2/4 HORIZONTAL CROSS SECTION @ HINGE JAMB TO SIDELITE

Product Evaluation Documents Prepared By:
RW BUILDING CONSULTANTS, INC.
P.O. Box 230 Valrico FL. 33595
Phone No.: 813.659.9197
Florida Board of Professional Engineers
Certificate Of Authorization No. 9813
10/01/03
Lyndon F. Schmidt, P.E. No. 43409

PRODUCT: "PREMIUM SERIES" W & W/OUT SIDELITES UP TO 8-0 x 8-4 INSWING UNIT

PART OR ASSEMBLY: HORIZONTAL CROSS SECTIONS

NO.	DATE	REVISIONS	BY
1	10/1/03	PER DADE LETTER	TJH

Approved as complying with the Florida Building Code
Date DEC. 18, 2003
NOA# 03-0818.02
Miami Dade Product Control Division
By Manuel Perez

DATE: 7/14/03
SCALE: N.T.S.
DWG. BY: TJH
CHK. BY: RW
DRAWING NO.: S-2348
SHEET 4 OF 9

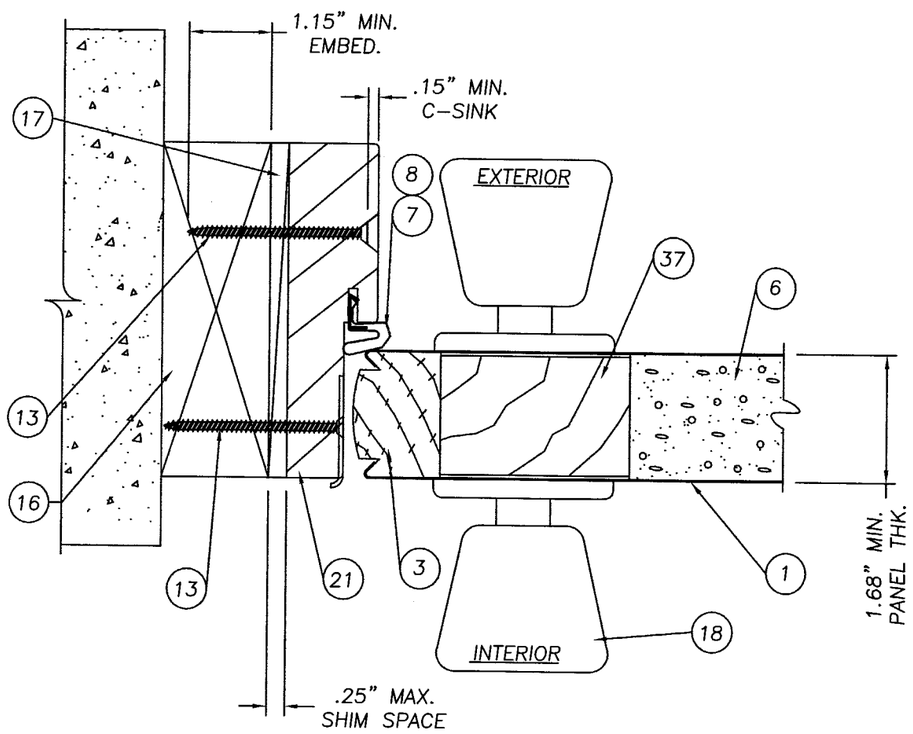

1/5 HORIZONTAL CROSS SECTION
LATCH JAMB TO BUCK,

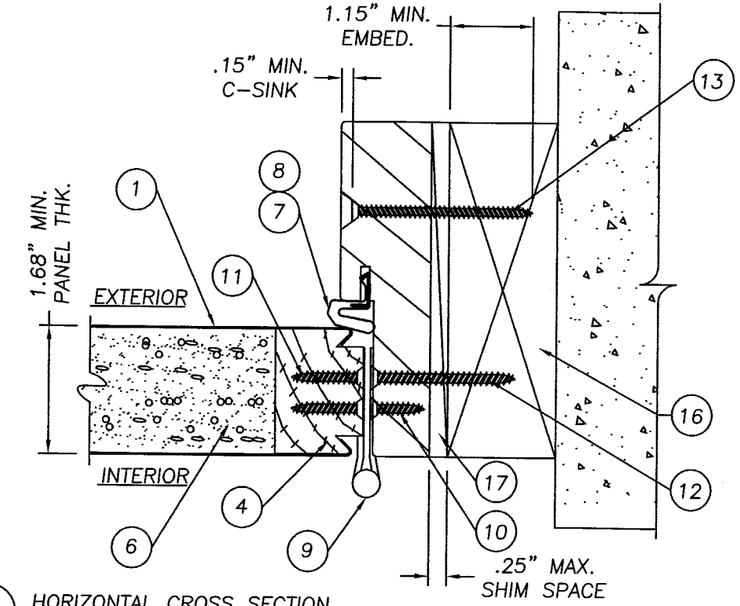

2/5 HORIZONTAL CROSS SECTION
HINGE JAMB TO BUCK,

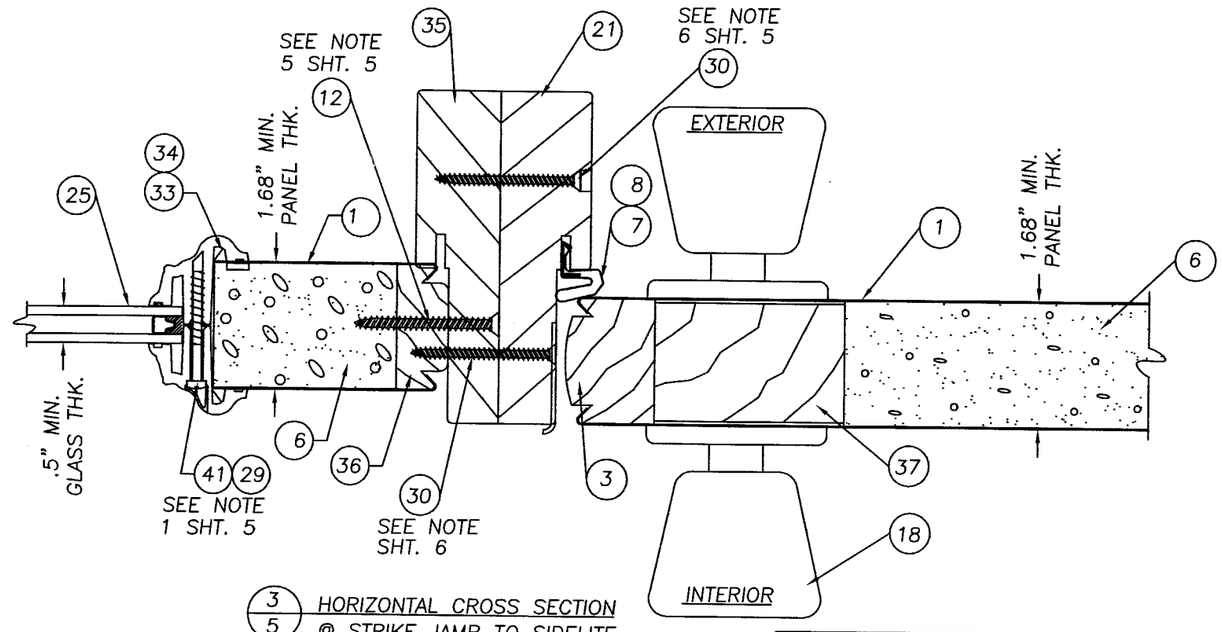

3/5 HORIZONTAL CROSS SECTION
@ STRIKE JAMB TO SIDELITE

NOTES:

1. SPACING FOR ITEM #29 & #41 (LITE FRAME SCREWS) IS AS FOLLOWS: FROM THE TOP DOWN ON SIDES; 2.625", 18.0", 33.25", 48.5", 63.875" & 79.125". THERE IS (1) SCREW BOTH TOP AND BOTTOM AT 2.625" IN FROM BOTH CORNERS.
2. SPACING FOR ITEM #27 #8 x 1" PANHEAD SCREW ATTACHING THE ASTRAGAL TO THE INACTIVE DOOR IS AS FOLLOWS: FROM THE BOTTOM UP AND TOP DOWN 1", 3", 5", 18.25", 54.0", 77.0", 90.25" AND 94.25.
3. THE HEAD JAMB IS ATTACHED TO THE SIDE JAMBS WITH (3) 16GA. x 1/2" CROWN x 2" STAPLES AT BOTH SIDE.
4. THE THRESHOLD IS ATTACHED TO THE SIDE JAMBS WITH (2) 16GA. x 1/2" CROWN x 2.5" STAPLES AT BOTH SIDE.
5. THE SIDELITE IS DIRECT SET INTO THE JAMB WITH ITEM #12 #10 x 2" PFH WOOD SCREW AT 6" DOWN FROM EACH CORNER AND A MAX. OF 12" O.C. ON THE SIDE JAMBS ONLY.
6. SPACING FOR ITEM #30, A #8 x 2.0" SCREW SECURING THE MULLIONS TOGETHER IS THE SAME AS THE PERIMETER ANCHORING SCREWS. 6" DOWN FROM THE TOP AND UP FROM THE BOTTOM WITH (4) MORE EQUALLY SPACED.

Approved as complying with the Florida Buiding Code
Date DEC. 18, 2003
NOA# 03-0818.02
Miami Dade Product Control Division
By Manuel Perez

Product Evaluation Documents Prepared By:
RW BUILDING CONSULTANTS, INC.
P.O. Box 230 Valrico FL. 33595
Phone No.: 813.659.9197
Florida Board of Professional Engineers
Certificate Of Authorization No. 9813
10/01/03
Lyndon F. Schmidt, P.E. No. 43409

PRODUCT: "PREMIUM SERIES" W & W/OUT SIDELITES UP TO 8-0 x 8-4 INSWING UNIT

PART OR ASSEMBLY: HORIZONTAL CROSS SECTIONS & NOTES

NO.	DATE	BY
1	10/1/03	TJH

REVISIONS: PER DADE LETTER

DATE: 7/14/03
SCALE: N.T.S.
DWG. BY: TJH
CHK. BY: RW
DRAWING NO.: S-2348
SHEET 5 OF 9

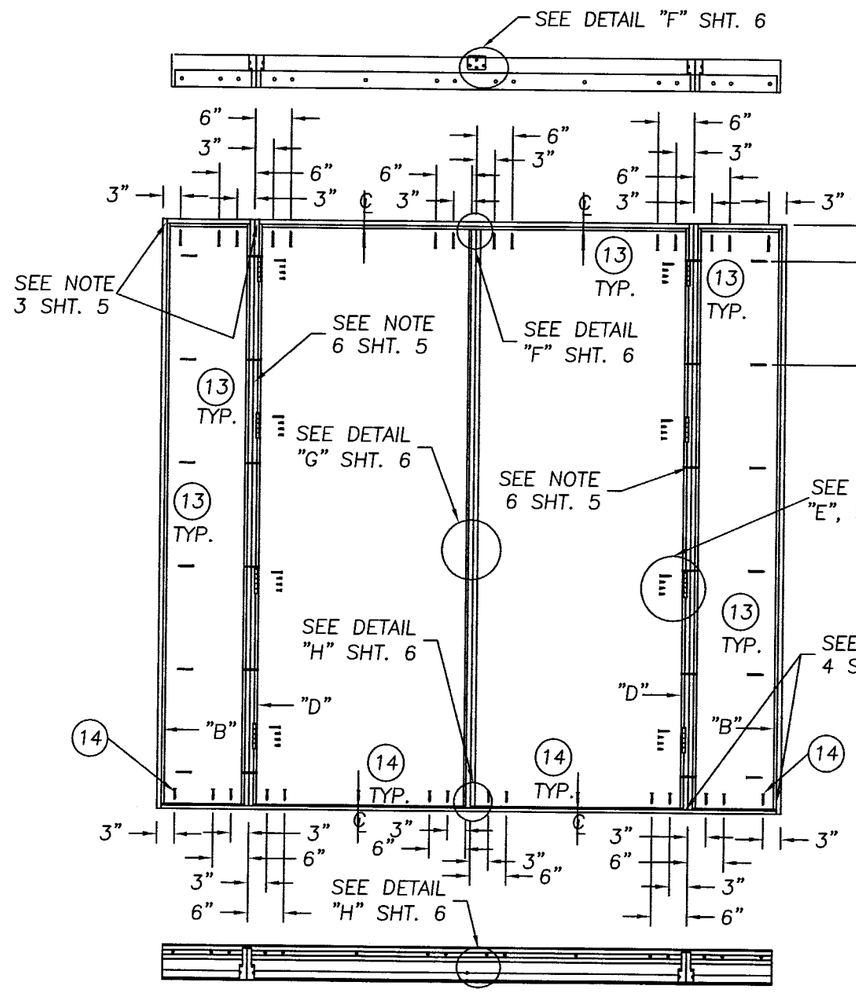

DOUBLE DOOR W/SIDELITES

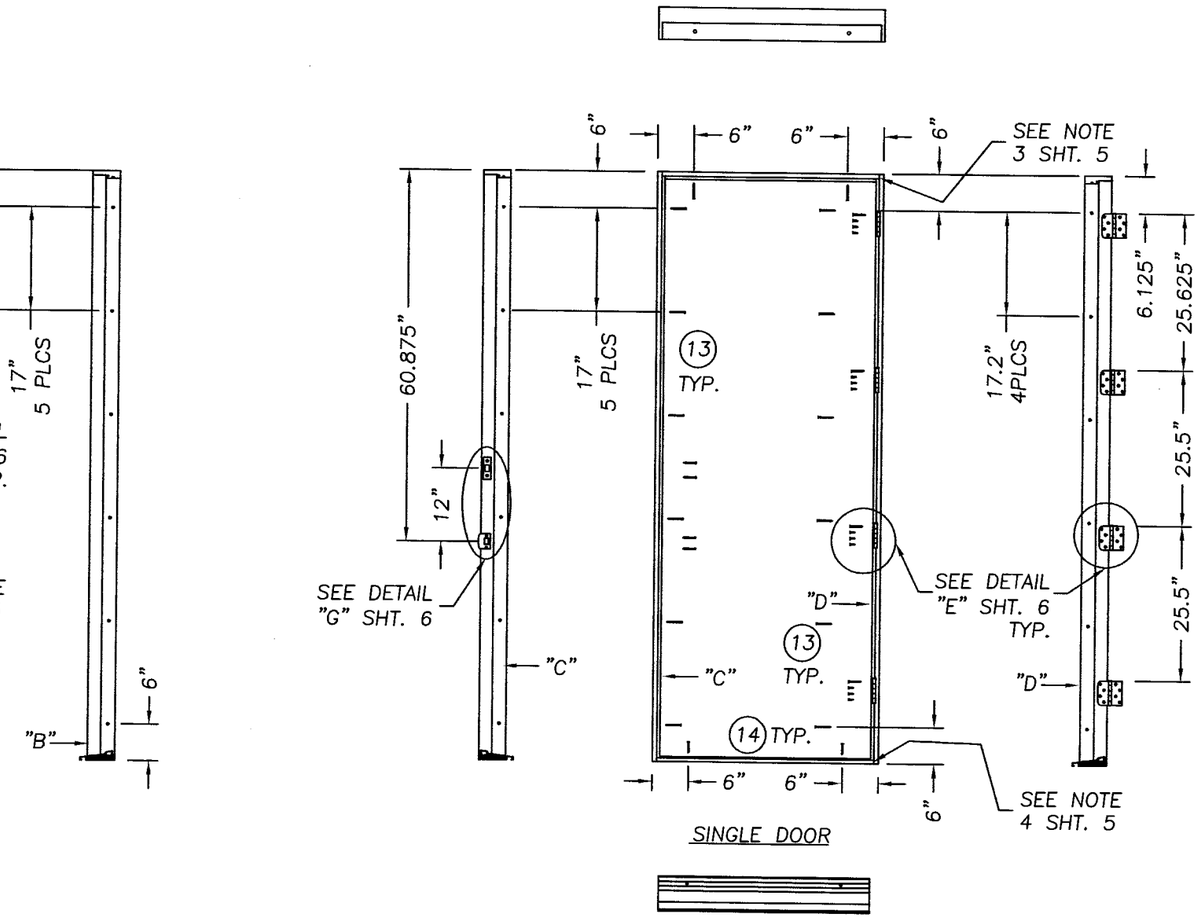

SINGLE DOOR

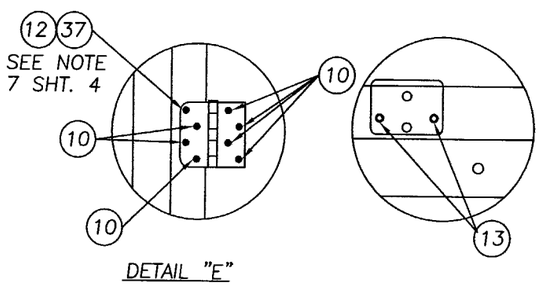

DETAIL "E"

DETAIL F
ASTRAGAL RETAINER BOLTS HEADER STRIKE PLATE

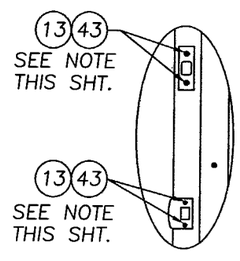

DETAIL G

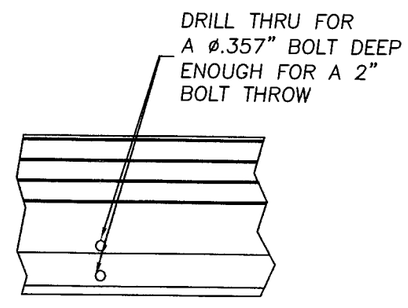

DETAIL "H"
ASTRAGAL RETAINER BOLT HOLES

NOTE:
USE ITEM #13 A #8 x 2 1/2" PFH WOOD SCREW TO ATTACH THE STRIKE AND DEADBOLT PLATES TO THE JAMB OR ASTRAGAL EXCEPT IN THE MULLED APPLICATION WITH THE SIDELITE USE ITEM #30 A #8 x 2" PFH WOOD SCREW.

Approved as complying with the Florida Buiding Code
Date DEC. 18, 2003
NOA# 03-0818.02
Miami Dade Product Control Division
By Manuel Perez

Product Evaluation Documents Prepared By:
RW BUILDING CONSULTANTS, INC.
P.O. Box 230 Valrico FL. 33595
Phone No.: 813.659.9197
Florida Board of Professional Engineers
Certificate Of Authorization No. 9813
Lyndon F. Schmidt, P.E. No. 43409

PRODUCT: "PREMIUM SERIES" W & W/OUT SIDELITES UP TO 8-0 x 8-4 INSWING UNIT

PART OR ASSEMBLY: ANCHORING LOCATIONS & DETAILS

REVISIONS

NO.	DATE		BY
1	10/1/03	PER DADE LETTER	TJH

DATE: 7/14/03
SCALE: N.T.S.
DWG. BY: TJH
CHK. BY: RW
DRAWING NO.: S-2348
SHEET 6 OF 9

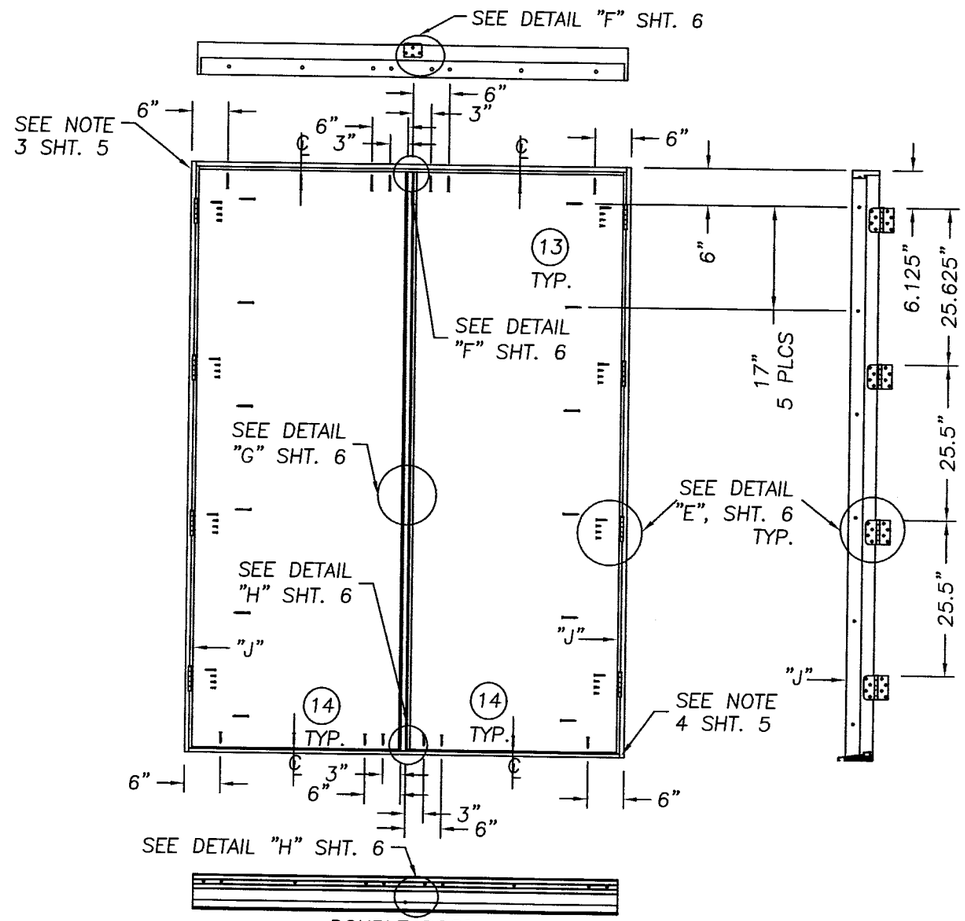

DOUBLE DOOR

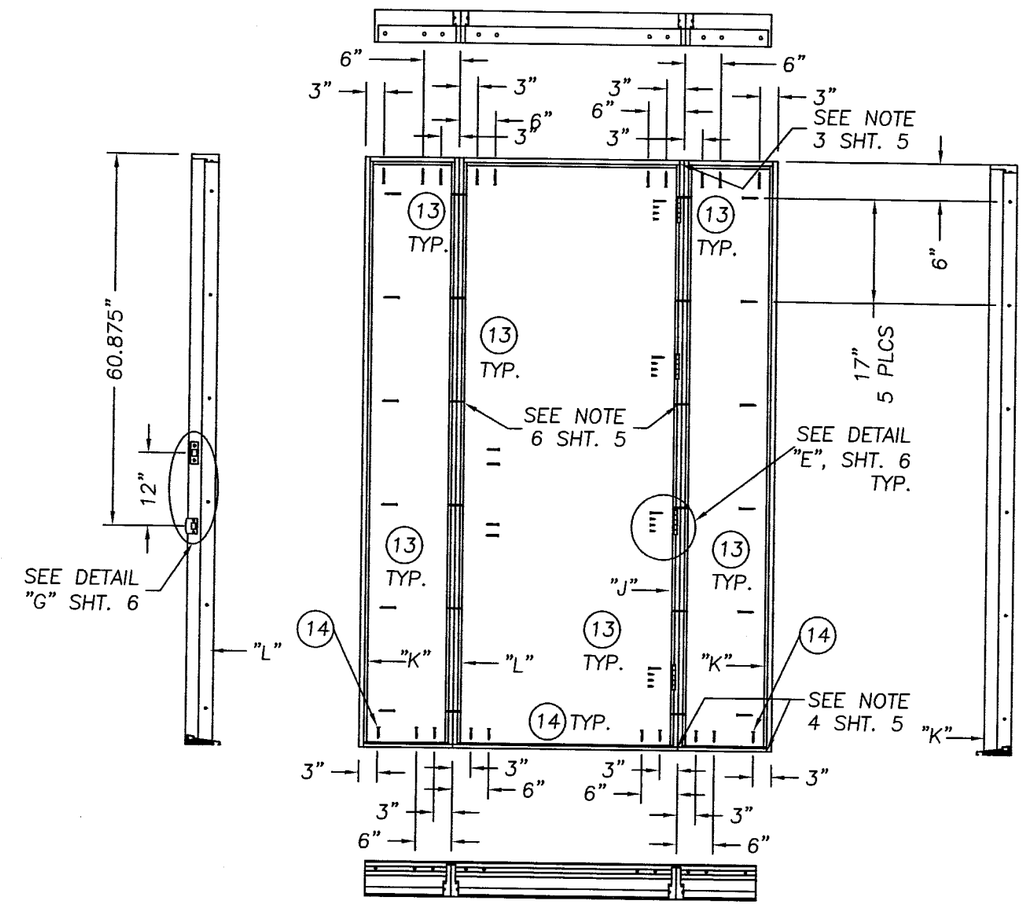

SINGLE DOOR W/SIDELITES

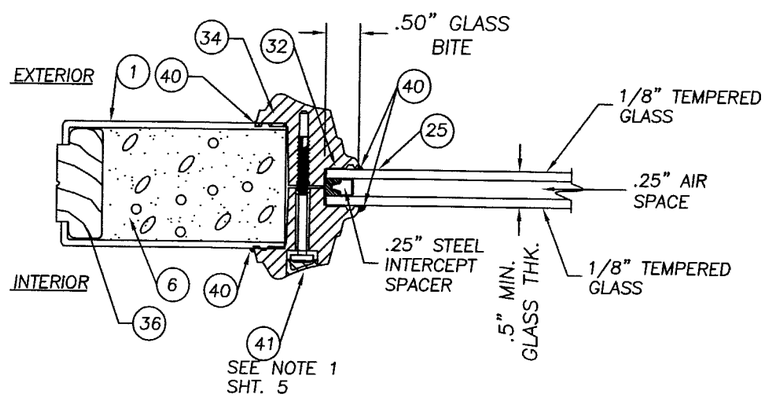

.5" INSULATED GLASS W/
SMC LITE FRAME GLAZING DETAIL

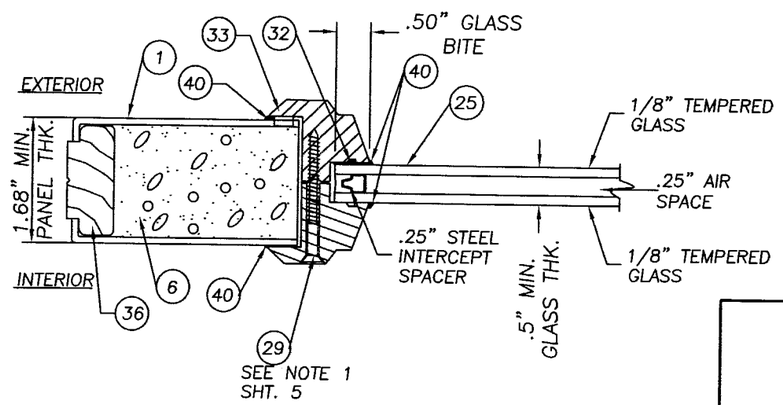

.5" INSULATED GLASS W/
PVC LITE FRAME GLAZING DETAIL

Approved as complying with the Florida Buiding Code
Date DEC. 18, 2003
NOA# 03-0818.02
Miami Dade Product Control Division
By Manuel Perez

Product Evaluation Documents Prepared By:
RW BUILDING CONSULTANTS, INC.
P.O. Box 230 Valrico FL. 33595
Phone No.: 813.659.9197
Florida Board of Professional Engineers
Certificate Of Authorization No. 9813
10/01/03
Lyndon F. Schmidt, P.E. No. 43409

PRODUCT: "PREMIUM SERIES" W & W/OUT SIDELITES UP TO 8-0 x 8-4 INSWING UNIT

PART OR ASSEMBLY: ANCHORING LOCATIONS & GLAZING DETAILS

NO.	DATE	REVISIONS	BY
1	10/1/03	PER DADE LETTER	TJH

DATE: 7/14/03
SCALE: N.T.S.
DWG. BY: TJH
CHK. BY: RW
DRAWING NO.: S-2348
SHEET 7 OF 9

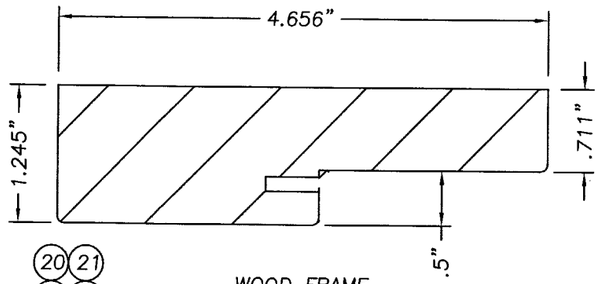

20 21 22 35

WOOD FRAME
FINGER JOINTED PONDEROSA PINE

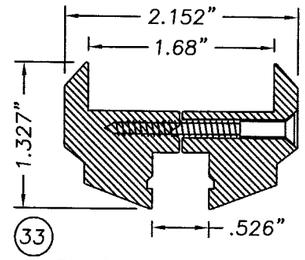

33

PLASTIC LIP LITE FRAME
EXTRUDED PVC

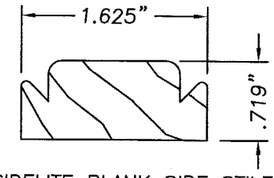

36

SIDELITE BLANK SIDE STILE
FINGER JOINTED PONDEROSA PINE

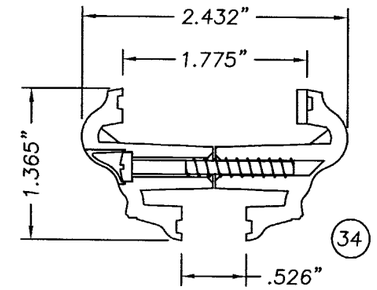

34

BTS PLASTIC LIP LITE FRAME
EXTRUDED BTS

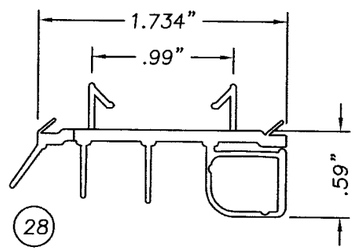

28

INSWING DOOR BOTTOM SWEEP
EXTRUDED VINYL .080"
WALL MAX. .034" WALL MIN.

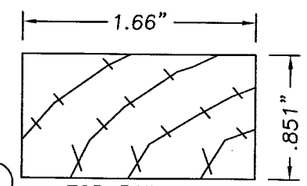

2

TOP RAIL
FINGER JOINTED PONDEROSA PINE

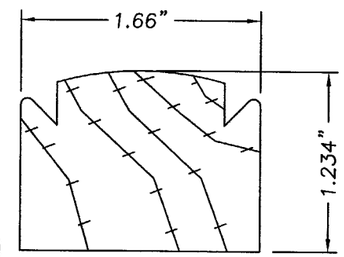

3

WOOD LATCH SIDE STILE

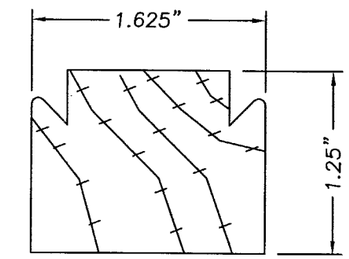

WOOD HINGE SIDE STILE 4

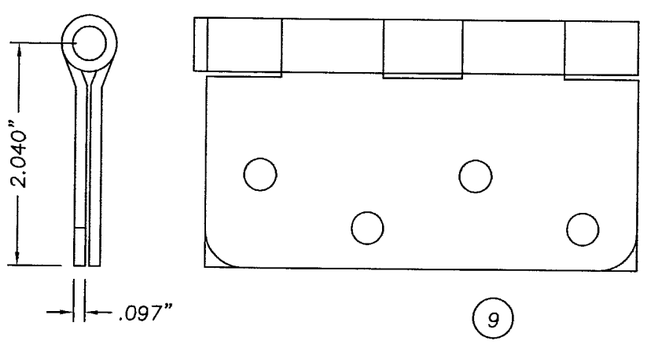

9

4 x 4 STEEL DOOR HINGE

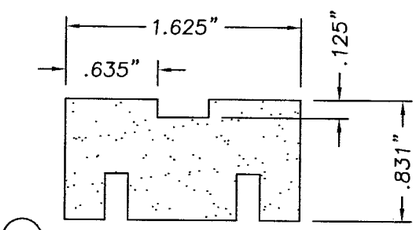

5

BOTTOM RAIL, WOOD COMPOSITE

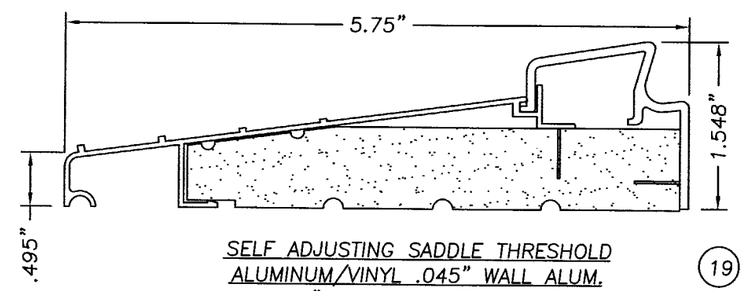

SELF ADJUSTING SADDLE THRESHOLD
ALUMINUM/VINYL .045" WALL ALUM.
.080" THK. WALL VINYL TYP.

19

NOTE:
ALL DIMENSION SHALL BE MINIMUM AS LARGEST TESTED

Approved as complying with the Florida Buiding Code
Date DEC. 18, 2003
NOA# 03-0818.02
Miami Dade Product Control Division
By Manuel Perez

Product Evaluation Documents Prepared By:
RW BUILDING CONSULTANTS, INC.
P.O. Box 230 Valrico FL. 33595
Phone No.: 813.659.9197
Florida Board of Professional Engineers
Certificate Of Authorization No. 9813
10/01/03
Lyndon F. Schmidt, P.E. No. 43409

PRODUCT: "PREMIUM SERIES" W & W/OUT SIDELITES UP TO 8-0 x 8-4 INSWING UNIT
PART OR ASSEMBLY: UNIT COMPONENTS

NO.	DATE	REVISIONS	BY
1	10/1/03	PER DADE LETTER	TJH

DATE: 7/14/03
SCALE: N.T.S.
DWG. BY: TJH
CHK. BY: RW
DRAWING NO.: S-2348
SHEET 8 OF 9

Item	DESCRIPTION	Material
1	DOOR SKIN; CONSTRUCTION SERIES 25GA. (.018" MIN.)	STEEL
2	TOP RAIL (1.628" x .851" THERMA-TRU PONDEROSA PINE)	WOOD
3	LATCH STILE (THERMA-TRU, PONDEROSA PINE 1.66" x 1.234")	WOOD
4	HINGE STILE (THERMA-TRU, PONDEROSA PINE 1.625" x 1.25")	WOOD
5	BOTTOM RAIL (1.628" x .831" THERMA-TRU WOOD COMPOSITE)	WOOD COMPOSITE
6	POLYURETHANE FOAM (BASF, 1.9lbs. DENSITY)	FOAM
7	SHORT REACH COMPRESSION WEATHERSTRIP (THREMA-TRU)	FOAM
8	LONG REACH COMPRESSION WEATHERSTRIP (THREMA-TRU)	FOAM
9	4" x 4" HINGE .097" THK. (THERMA-TRU)	STEEL
10	#10 x 3/4" lg. PFH WOOD SCREW (Hinge to Frame)	STEEL
11	#10 x 1" LG. PFH WOOD SCREW	STEEL
12	#10 x 2" LG. PFH WOOD SCREW	STEEL
13	#8 x 2 1/2" LG. PFH WOOD SCREW	STEEL
14	3/16" x 2.0" MIN. TAPCON ANCHOR (ELCO)	STEEL
15	NOT USED	
16	2x WOOD BUCK	WOOD
17	MAX. 1/4" SHIM MATERIAL	WOOD
18	KWIKSET TITAN 700 SERIES PASSAGE LOCK	–
19	SELF ADJUSTING INSWING SADDLE THRESHOLD	ALUM./WOOD
20	4.656" HEADER (THERMA-TRU, PONDEROSA PINE)	WOOD
21	4.656" STRIKE JAMB (THERMA-TRU, PONDEROSA PINE)	WOOD
22	4.656" HINGE JAMB (THERMA-TRU, PONDEROSA PINE)	WOOD
23	KWIKSET TITAN 700 SERIES DEADBOLT	–
24	ASTRAGAL WINDJAMBER II WR80T (.052" WALL)	ALUM.
25	GLAZING, 1/2" INSULATED TEMPERED GLASS	GLASS
26	3/4" THK. PRESSURE TREATED SIDELITE PAD	WOOD
27	#8 x 1" LG. PANHEAD SHEET METAL SCREW	STEEL
28	INSWING DOOR BOTTOM SWEEP	VINYL
29	#6-18 x 1 3/4" PHILLIPS FLATHEAD SCREW (FOR ITEM #33)	STEEL
30	#8 x 2" LG. PFH WOOD SCREW	STEEL
31	3/16" x 3 1/4" MIN. TAPCON ANCHOR (ELCO)	STEEL
32	1/8 THK. CELLULAR GLAZING TAPE (STIK-II TAPE)	–
33	PLASTIC LIP LITE FRAME (PVC, THERMA-TRU)	PVC
34	PLASTIC LIP LITE FRAME (BTS, THERMA-TRU)	BTS
35	4.656" BLANK JAMB (THERMA-TRU, PONDEROSA PINE)	WOOD
36	SIDELITE SIDE STILE (THERMA-TRU, 1.625" x .719" PONDEROSA PINE)	WOOD
37	LOCK BLOCK 2.625" x 10.375" x 1.625" THK.	WOOD
38	#10 x 1 3/4" LG. PFH WOOD SCREW	STEEL
39	NOT USED	–
40	SILICONE CAULK	SILICONE
41	#8-10 x 1 1/2" PLASCREW (FOR ITEM #34)	STEEL
42	#10 x 3" LG. PFH WOODSCREW	STEEL

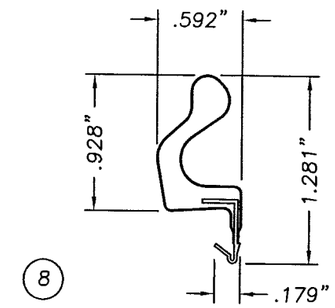

8

LONG REACH COMPRESSION WEATHERSTRIP
FOAM CELL CORE W/VINYL JACKET

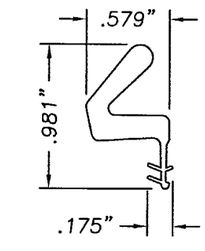

7

COMPRESSION WEATHERSTRIP
BY THERMA-TRU
FOAM CELL CORE W/VINYL JACKET

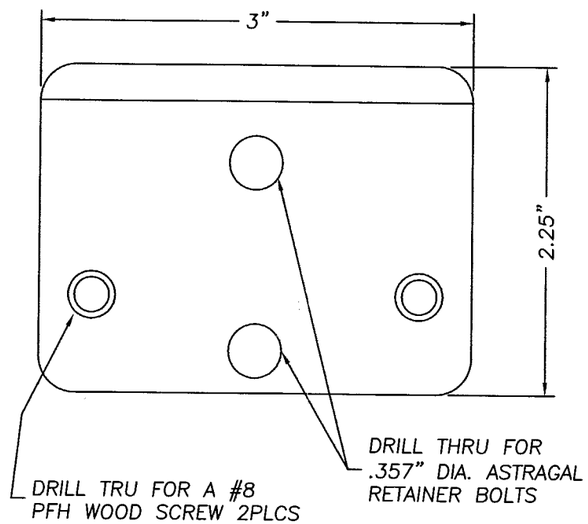

WINDJAMBER II WR68T STRIKE PLATE

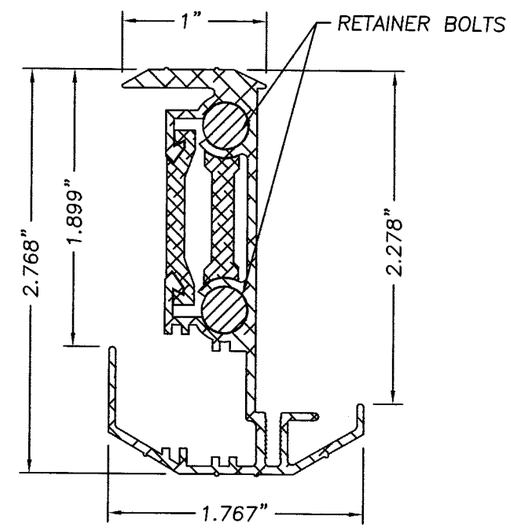

24

WINDJAMBER II WR80T
ASTRAGAL (ALUMINUM .052" WALL TYP.)

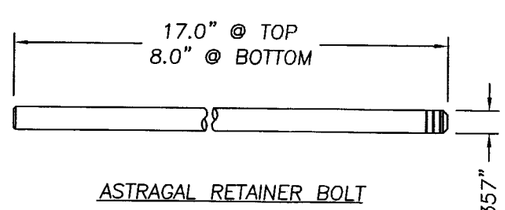

ASTRAGAL RETAINER BOLT
MATERIAL: C/R ROD ZINC
& YELLOW CHROMATE

Approved as complying with the Florida Buiding Code
Date DEC. 18, 2003
NOA# 03-0818.02
Miami Dade Product Control Division
By Manuel Beroz

Product Evaluation Documents Prepared By:
RW BUILDING CONSULTANTS, INC.
P.O. Box 230 Valrico FL. 33595
Phone No.: 813.659.9197
Florida Board of Professional Engineers
Certificate Of Authorization No. 9813
10/01/03
Lyndon F. Schmidt, P.E. No. 43409

PRODUCT: "PREMIUM SERIES" W & W/OUT SIDELITES UP TO 8-0 x 8-4 INSWING UNIT

PART OR ASSEMBLY: UNIT COMPONENTS & BILL OF MATEERIALS

NO.	DATE		BY
1	10/1/03	PER DADE LETTER	TJH

REVISIONS

DATE: 7/14/03
SCALE: N.T.S.
DWG. BY: TJH
CHK. BY: RW
DRAWING NO.: S-2348
SHEET 9 OF 9