MIAMI-DADE COUNTY

BUILDING CODE COMPLIANCE OFFICE (BCCO)
PRODUCT CONTROL DIVISION

MIAMI-DADE COUNTY, FLORIDA
METRO-DADE FLAGLER BUILDING
140 WEST FLAGLER STREET, SUITE 1603
MIAMI, FLORIDA 33130-1563
(305) 375-2901 FAX (305) 375-2908
www.buildingcodeonline.com

NOTICE OF ACCEPTANCE (NOA)

Simonton Windows
One Cochrane Drive
Pennsboro, WV 26415

SCOPE:

This NOA is being issued under the applicable rules and regulations governing the use of construction materials. The documentation submitted has been reviewed by Miami-Dade County Product Control Division and accepted by the Board of Rules and Appeals (BORA) to be used in Miami Dade County and other areas where allowed by the Authority Having Jurisdiction (AHJ).

This NOA shall not be valid after the expiration date stated below. The Miami-Dade County Product Control Division (In Miami Dade County) and/or the AHJ (in areas other than Miami Dade County) reserve the right to have this product or material tested for quality assurance purposes. If this product or material fails to perform in the accepted manner, the manufacturer will incur the expense of such testing and the AHJ may immediately revoke, modify, or suspend the use of such product or material within their jurisdiction. BORA reserves the right to revoke this acceptance, if it is determined by Miami-Dade County Product Control Division that this product or material fails to meet the requirements of the applicable building code.

This product is approved as described herein, and has been designed to comply with the Florida Building Code, including the High Velocity Hurricane Zone.

DESCRIPTION: Series "5500" Outswing PVC Casement Windows

APPROVAL DOCUMENT: Drawing No. **S-2371**, titled "Extruded Vinyl Casement Windows ", sheets 1 thru 9 of 9, prepared by R. W. Building Consultants, Inc., dated 07/23/03 and last revised on 10-20-2005, singed and sealed by Wendell W. Haney, P.E., bearing the Miami-Dade County Product Control Approval stamp with the Notice of Acceptance number and approval date by the Miami-Dade County Product Control Division.

MISSILE IMPACT RATING: None: Approved Shutters complying w/ FBC, as applicable, is required

LABELING: Each unit shall bear a permanent label with the manufacturer's name or logo, city, state and following statement: "Miami-Dade County Product Control Approved", unless otherwise noted herein.

RENEWAL of this NOA shall be considered after a renewal application has been filed and there has been no change in the applicable building code negatively affecting the performance of this product.

TERMINATION of this NOA will occur after the expiration date or if there has been a revision or change in the materials, use, and/or manufacture of the product or process. Misuse of this NOA as an endorsement of any product, for sales, advertising or any other purposes shall automatically terminate this NOA. Failure to comply with any section of this NOA shall be cause for termination and removal of NOA.

ADVERTISEMENT: The NOA number preceded by the words Miami-Dade County, Florida, and followed by the expiration date may be displayed in advertising literature. If any portion of the NOA is displayed, then it shall be done in its entirety.

INSPECTION: A copy of this entire NOA shall be provided to the user by the manufacturer or its distributors and shall be available for inspection at the job site at the request of the Building Official.
This NOA consists of this page 1 and evidence pages E-1 as well as approval document mentioned above.
The submitted documentation was reviewed by **Ishaq I. Chanda, P.E.**

PRODUCT CONTROL ACCEPTED

8
11/15

Simonton Windows

NOTICE OF ACCEPTANCE: EVIDENCE SUBMITTED

A. DRAWINGS

1. Manufacturer's die drawings and sections.
2. Drawing No. **S-2371**, titled "Extruded Vinyl Casement Windows", sheets 1 thru 9 of 9, prepared by R. W. Building Consultants, Inc., dated 07/23/03 and last revised on 10-20-2005, singed and sealed by Wendell W. Haney, P.E.

B. TESTS

1. Test reports on 1) Air Infiltration Test, per FBC, TAS 202-94
   2) Uniform Static Air Pressure Test, Loading per FBC TAS 202-94
   3) Water Resistance Test, per FBC, TAS 202-94
   4) Forced Entry Test, per FBC 2411.3.2.1 (b) and TAS 202-94

   Along with marked-up drawings and installation diagram of PVC Casement Windows, prepared by Architectural Testing Inc., Test Report No. **CTLA 1131W** dated 07/15/03, signed and sealed by Ramesh Patel, P.E.

C. CALCULATIONS

1. Anchor verification calculation and structural analysis, prepared by R.W. Building Consultants, Inc., dated 07/29/03 and last revised on 09-30-2005, signed and sealed by Wendell W. Haney, P.E.
2. Anchor verification calculation complying w/ FBC-2004, dated 09-30-2005, signed and sealed by Wendell W. Haney, P.E.
3. Glazing complies with ASTME-1300-98.

D. QUALITY ASSURANCE

1. Miami Dade Building Code Compliance Office (BCCO)

E. MATERIAL CERTIFICATIONS

1. Notice of Acceptance No. **02-0927.02,** issued to Veka, Inc., for "White Rigid PVC Exterior Extrusions for Windows and Doors", expiring on March 04, 2007.
2. Notice of Acceptance No. **03-0507.07,** issued to SimEx, Inc., for "White Rigid PVC Exterior Extrusions for Windows and Doors", expiring on October 12, 2008.

F. STATEMENTS

1. Statement letter of conformance to FBC2004 and "No financial interest ", dated 10-17-2005, signed and sealed by Wendell W. Haney, P.E.
2. Laboratory compliance letter, as part of the above referenced test reports, issued by Certified Testing laboratories.
3. Statement letter dated Jan 14, 2004 and Dec 13, 2003 from American Architectural Manufacturers Association (AAMA), verifying participation in AAMA's "PVC" profile certification program for the Veka Inc & SimEx Inc, respectively.

G. OTHER

1. AAMA association File# 98-0036.
2. Letter issued by Simonton Windows, identifying glazing sealant & tape, signed by Steve Brooks.

Ishaq I. Chanda

Ishaq I. Chanda, P.E.
Product Control Examiner
NOA No 03-0822.03
Expiration Date: November 10, 2010
Approval Date: November 10, 2005

SIMONTON WINDOWS

SERIES 5500 NON-IMPACT

EXTRUDED VINYL PVC OUTSWING CASEMENT WINDOWS

GENERAL NOTES

1. THIS PRODUCT HAS BEEN EVALUATED AND IS IN COMPLIANCE WITH THE FLORIDA BUILDING CODE INCLUDING THE "HIGH VELOCITY HURRICANE ZONE".
2. PRODUCT ANCHORS SHALL BE AS LISTED AND SPACED AS SHOWN ON DETAILS. ANCHOR EMBEDMENT TO BASE MATERIAL SHALL BE BEYOND WALL DRESSING OR STUCCO.
3. WHEN USED IN THE "HIGH VELOCITY HURRICANE ZONE" THIS PRODUCT IS REQUIRED TO BE PROTECTED WITH AN IMPACT RESISTANT COVERING THAT COMPLIES WITH SECTION 1626 OF THE FLORIDA BUILDING CODE.
4. WHEN USED IN AREAS OUTSIDE OF THE "HVHZ" REQUIRING WIND-BORNE DEBRIS PROTECTION THIS PRODUCT IS REQUIRED TO BE PROTECTED WITH AN IMPACT RESISTANT COVERING THAT COMPLIES WITH SECTION 1609.1.4 OF THE FLORIDA BUILDING CODE.
5. FOR 2X STUD FRAMING CONSTRUCTION, THE ANCHORING OF THESE UNITS SHALL BE THE SAME AS THAT SHOWN FOR 2X BUCK MASONRY CONSTRUCTION.
6. WOOD BUCKS BY OTHERS, MUST BE ANCHORED PROPERLY TO TRANSFER LOADS TO STRUCTURE AND TO BE REVIEWED BY BUILDING OFFICIAL.
7. FOR DESIGN PRESSURE RATING SEE CHART THIS SHEET.
8. THIS PRODUCT MEETS THE WATER REQUIREMENTS FOR HIGH VELOCITY HURRICANE ZONES.

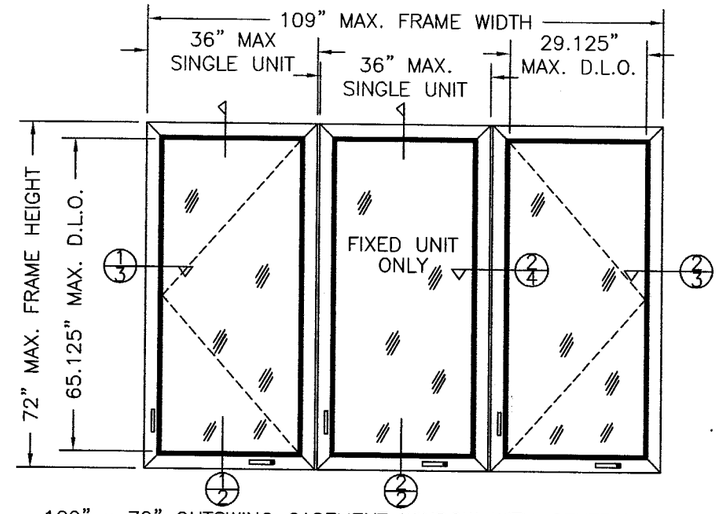

109" x 72" OUTSWING CASEMENT WINDOW WITH CENTRAL FIXED UNIT
SERIES 5500 TRIPLE MULLED

DESIGN PRESSURE RATING	
+50.0 PSF	-60.0 PSF
TEMPERED GLASS ALL UNITS	

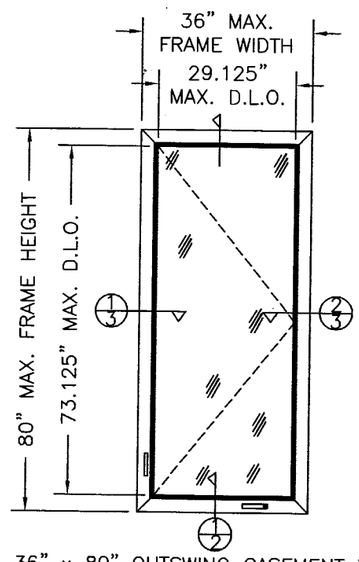

36" x 80" OUTSWING CASEMENT WINDOW
SERIES 5500

DESIGN PRESSURE RATING	
+65.0 PSF	-65.0 PSF
TEMPERED GLASS	

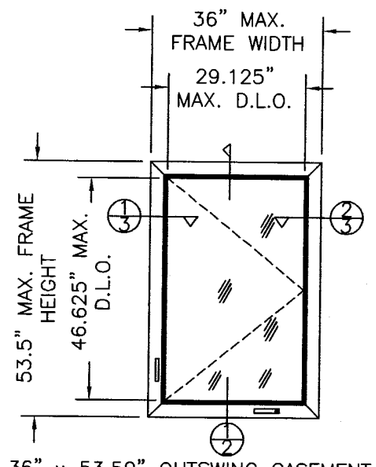

36" x 53.50" OUTSWING CASEMENT WINDOW
SERIES 5500

DESIGN PRESSURE RATING	
+65.0 PSF	-65.0 PSF
ANNEALED GLASS	

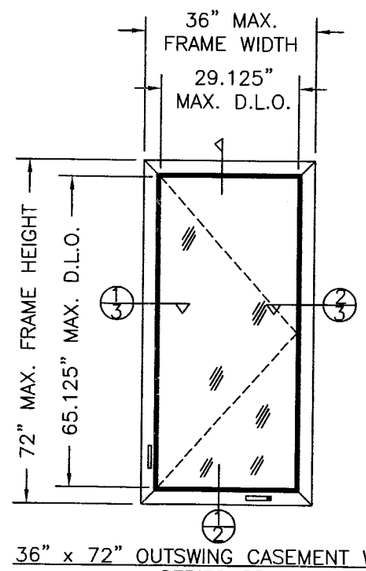

36" x 72" OUTSWING CASEMENT WINDOW
SERIES 5500

DESIGN PRESSURE RATING	
+65.0 PSF	-70.0 PSF
TEMPERED GLASS	

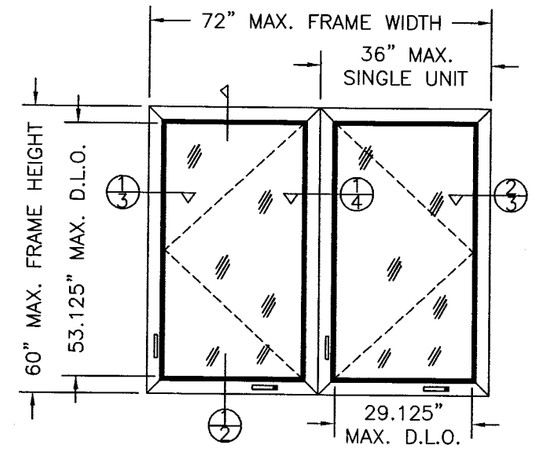

72" x 60" OUTSWING CASEMENT WINDOW
SERIES 5500 TWIN MULLED

DESIGN PRESSURE RATING	
+50.0 PSF	-50.0 PSF
TEMPERED GLASS BOTH UNITS	

TABLE OF CONTENTS

SHEET #	DESCRIPTION	SHEET #	
1	GENERAL NOTES & TYPICAL ELEVATIONS	6	ANCHORING LOCATIONS
2	VERTICAL HORIZONTAL CROSS SECTION	7	ANCHORING LOCATIONS
3	HORIZONTAL CROSS SECTIONS	8	COMPONENTS & BILL OF MATERIALS
4	HORIZONTAL CROSS SECTIONS & GLAZING DETAIL	9	ASSEMBLED MULL & ATTACHMENT VIEW
5	ANCHORING LOCATIONS		

Approved as complying with the Florida Building Code
Date NOVEMBER 10, 2005
NOA# 03-0903.03
Miami Dade Product Control Division
By Shaq I. Chanda

Documents Prepared By:
RW BUILDING CONSULTANTS, INC.
P.O. Box 230 Valrico FL. 33595
Phone No.: 813.659.9197
Florida Board of Professional Engineers
Certificate of Authorization No. 9813
Wendell W. Haney, P.E. No. 54158
10-20-05

PRODUCT: EXTRUDED VINYL PVC CASEMENT WINDOW

PART OR ASSEMBLY: GENERAL NOTES & TYPICAL ELEVATIONS

REVISIONS

NO.	DATE		BY
4	10/20/05	REVISED NOTES PER DADE	EW
3	10/17/05	EDIT PER DADE LETTER	RW
2	09/30/05	REVISED TO 2004 FBC	EW
1	12/22/04	EDIT PER DADE LETTER	WH

RW BUILDING CONSULTANTS, INC.
813.659.9197

DATE: 7/23/03
SCALE: NTS
DWG. BY: ROF
CHK. BY: RW
DRAWING NO.: S-2371
SHEET 1 OF 9

\\Rwbcsrv\rwbc\Proj 000 -250\pf217\S-2371_R4\S-2371-1.dwg

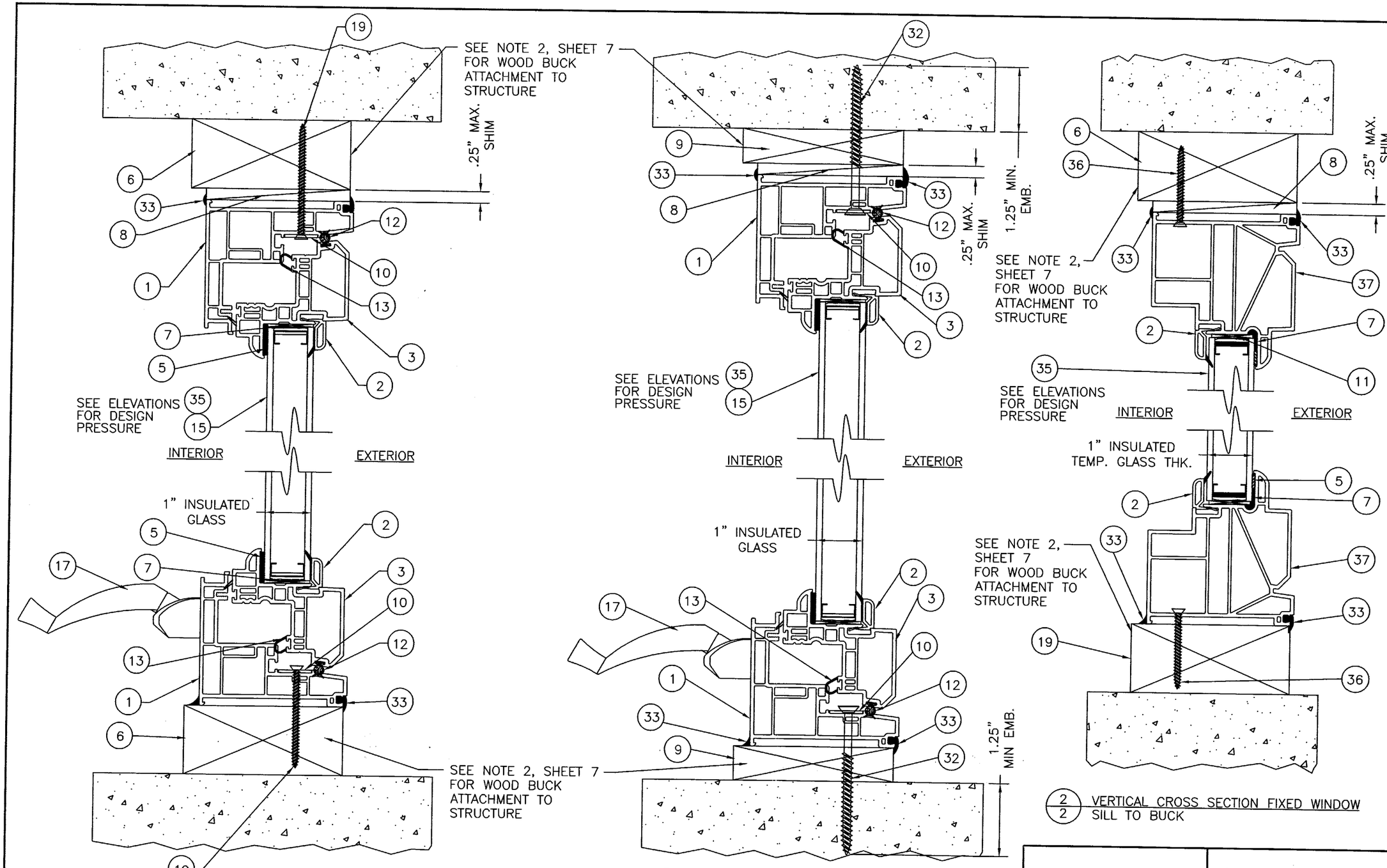

1/2 VERTICAL CROSS SECTION CASEMENT WINDOW
SILL TO BUCK

1/2 VERTICAL CROSS SECTION CASEMENT WINDOW
OPTIONAL 1X BUCK

2/2 VERTICAL CROSS SECTION FIXED WINDOW
SILL TO BUCK

Documents Prepared By:
RW BUILDING CONSULTANTS, INC.
P.O. Box 230 Valrico FL. 33595
Phone No.: 813.659.9197
Florida Board of Professional Engineers
Certificate Of Authorization No. 9813
Wendell W. Haney, P.E. No. 54158
10-29-05

PRODUCT: EXTRUDED VINYL PVC CASEMENT WINDOW

PART OR ASSEMBLY: VERTICAL CROSS SECTIONS

NO.	DATE	REVISIONS	BY
4	10/20/05	REVISED NOTES PER DADE	EW
3	10/17/05	EDIT PER DADE LETTER	RW
2	09/30/05	REVISED TO 2004 FBC	EW
1	12/22/03	EDIT PER DADE LETTER	WH

RW BUILDING CONSULTANTS, INC.
813.659.9197

Approved as complying with the Florida Building Code
Date Nov 10, 2005
NOA# 03-0903.02
Miami Dade Product Control Division
By Ishaq J. Chanda

DATE: 7/23/03
SCALE: NTS
DWG. BY: ROF
CHK. BY: RW
DRAWING NO.: S-2371
SHEET 2 OF 9

\\Rwbcsrv\rwbc\Proj 000 -250\pf217\S-2371_R4\S-2371-2.dwg

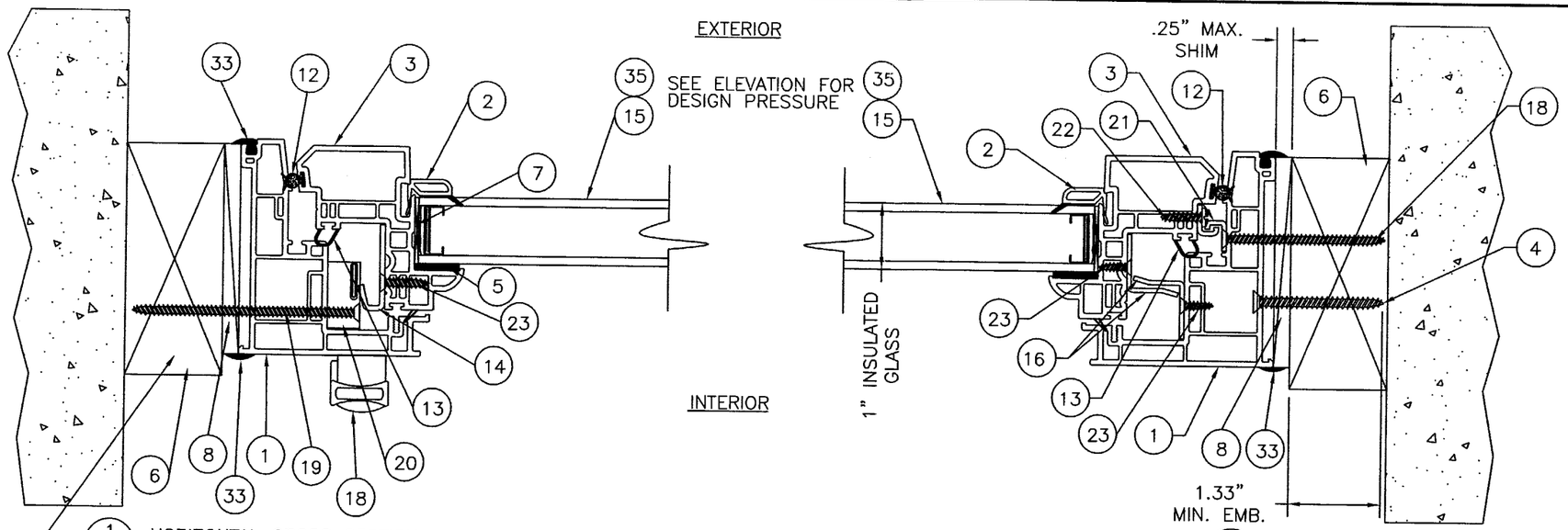

1/3 HORIZONTAL CROSS SECTION 2X SUB BUCK

2/3 HORIZONTAL CROSS SECTION 2X SUB BUCK

SEE NOTE 2, SHEET 7 FOR WOOD BUCK ATTACHMENT TO THE STRUCTURE

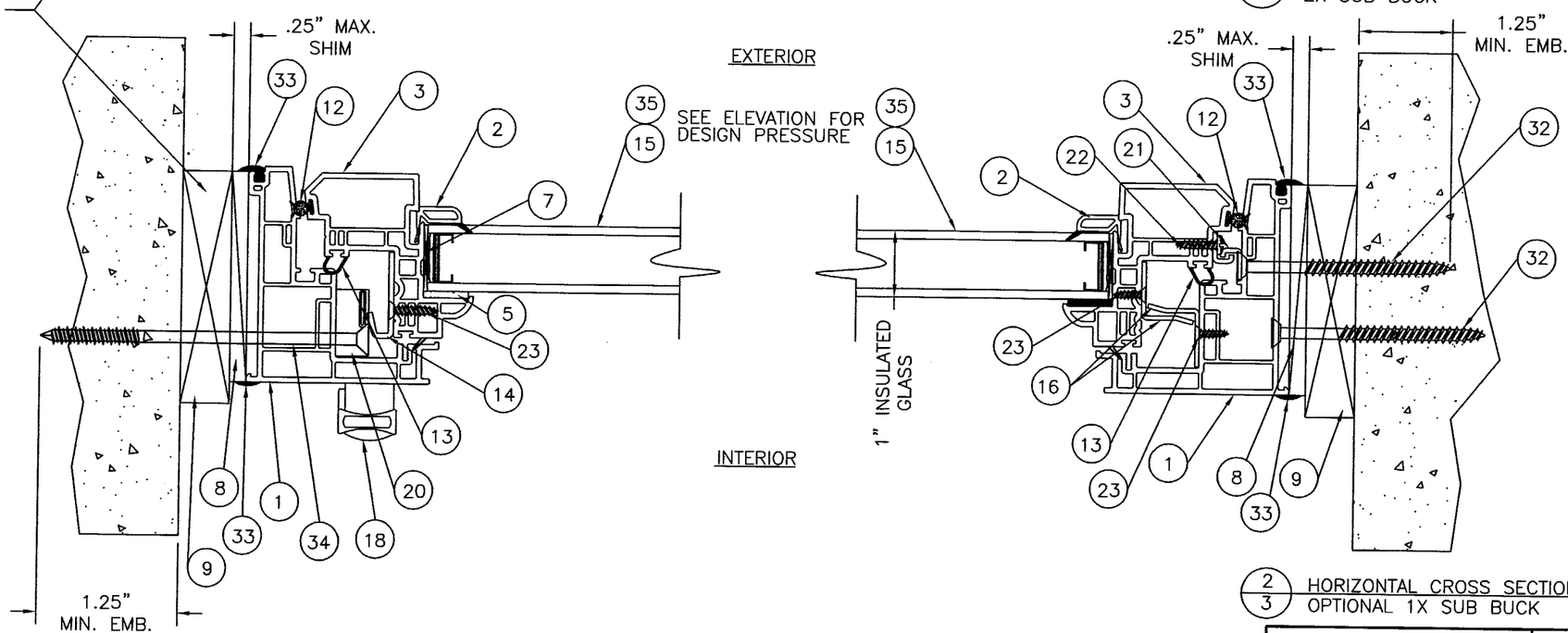

1/3 HORIZONTAL CROSS SECTION CASEMENT WINDOW OPTIONAL 1X SUB BUCK

2/3 HORIZONTAL CROSS SECTION CASEMENT WINDOW OPTIONAL 1X SUB BUCK

Approved as complying with the Florida Building Code
Date Nov 10, 2005
NOA# 03-0903.03
Miami Dade Product Control Division
By Shaq I. Chanda

Documents Prepared By:
RW BUILDING CONSULTANTS, INC.
P.O. Box 230 Valrico FL. 33595
Phone No.: 813.659.9197
Florida Board of Professional Engineers
Certificate Of Authorization No. 9813
Wendell Haney, P.E. #54158
10-20-05

PRODUCT: EXTRUDED VINYL PVS CASEMENT WINDOW

PART OR ASSEMBLY: HORIZONTAL CROSS SECTIONS

REVISIONS

NO.	DATE		BY
4	10/20/05	REVISED NOTES PER DADE	EW
3	10/17/05	EDIT PER DADE LETTER	RW
2	09/30/05	REVISED TO 2004 FBC	EW
1	12/22/04	EDIT PER DADE LETTER	WH

RW BUILDING CONSULTANTS, INC. 813.659.9197

DATE: 7/23/03
SCALE: NTS
DWG. BY: ROF
CHK. BY: RW
DRAWING NO.: S-2371
SHEET 3 OF 9

\\Rwbcsrv\rwbc\Proj 000 -250\pf217\S-2371_R4\S-2371-3.dwg

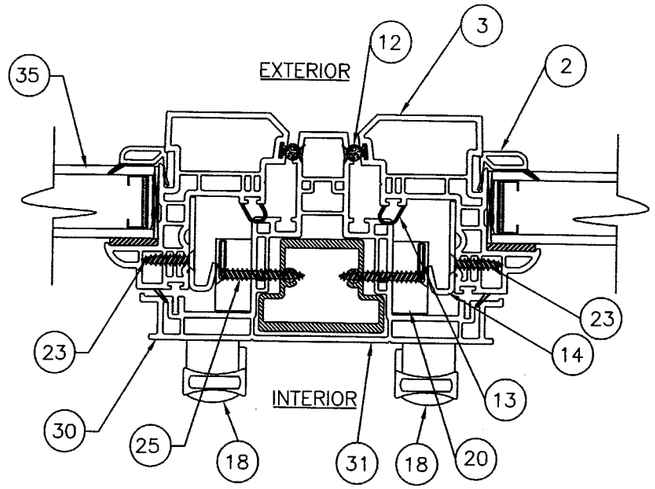

1/4 HORIZONTAL CROSS SECTION
DOUBLE

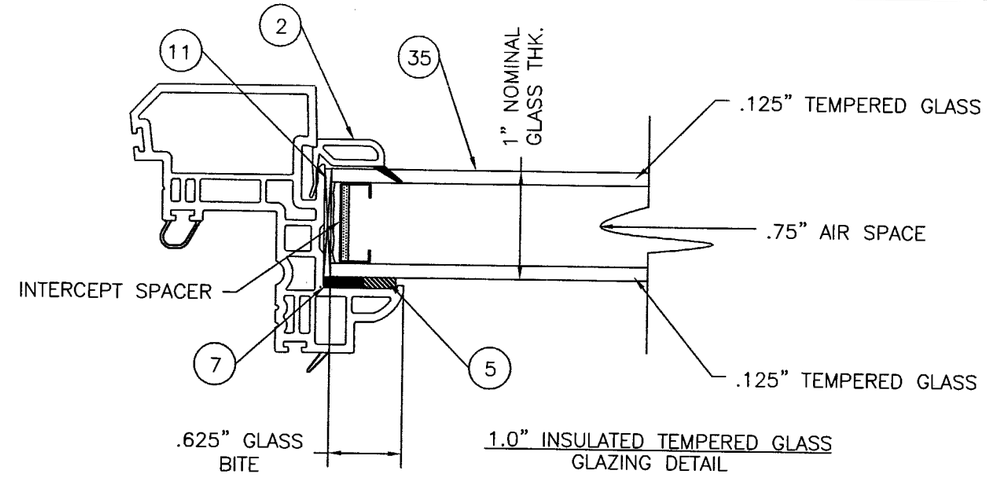

1.0" INSULATED TEMPERED GLASS
GLAZING DETAIL

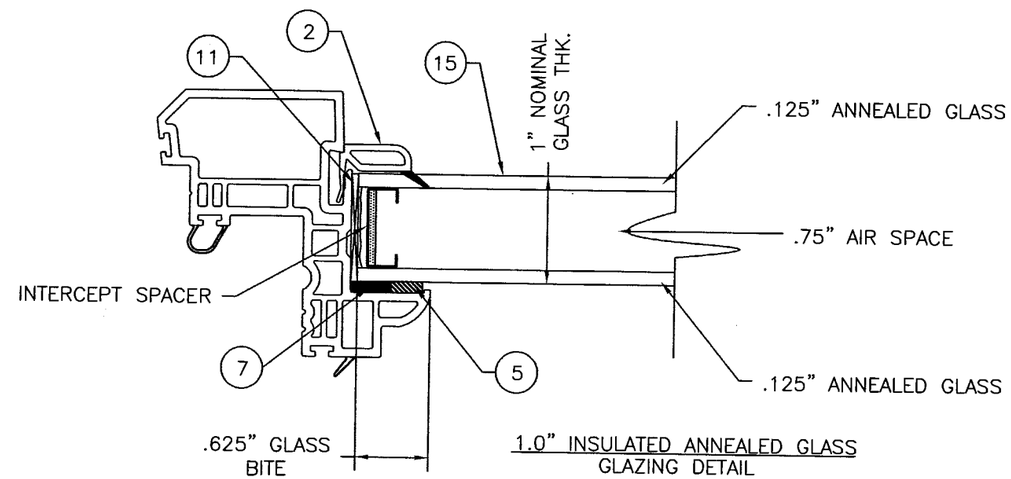

1.0" INSULATED ANNEALED GLASS
GLAZING DETAIL

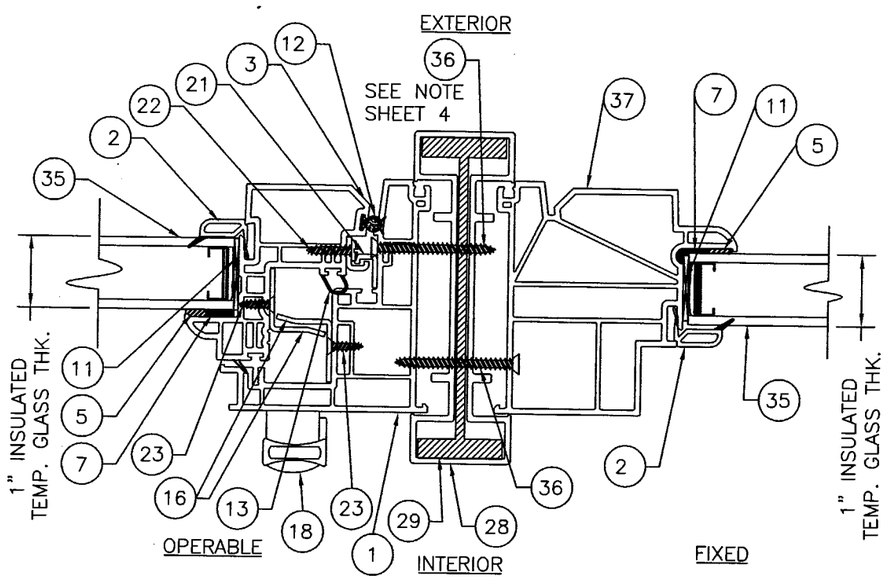

2/4 HORIZONTAL CROSS SECTION
TRIPLE MULLED UNIT

NOTE : THE CENTER FIXED UNIT IS ATTACHED TO THE MULL WITH (5), ITEM 36, A #8 X 1-3/4 PHILLIPS UNDER-CUT FLAT HEAD SCREWS SPACED AS FOLLOWS: 6" FROM THE TOP 15" ON CENTER & 6" UP FROM THE BOTTOM. THE OPERABLE UNITS ARE ATTACHED TO THE MULL WITH (4) ITEM #36, A #8 X 1-3/4" PHILLIPS UNDER-CUT FLAT HEAD SCREW SPACED AS FOLLOWS: 6" DOWN FROM TOP, 20" ON CENTER & 6" UP FROM BOTTOM.

Approved as complying with the Florida Building Code
Date Nov 10 2005
NOA# 03-0903.03
Miami Dade Product Control Division
By Shaq I. Chanda

Documents Prepared By:
RW BUILDING CONSULTANTS, INC.
P.O. Box 230 Valrico FL. 33595
Phone No.: 813.659.9197
Florida Board of Professional Engineers
Certificate Of Authorization No. 9813
Wendell W. Haney, P.E. No. 54158
10-20-05

PRODUCT: EXTRUDED VINYL PVC CASEMENT WINDOW

PART OR ASSEMBLY: HORIZONTAL CROSS SECTION &GLAZING DETAIL

REVISIONS

NO.	DATE		BY
4	10/20/05	REVISED NOTES PER DADE	EW
3	10/17/05	EDIT PER DADE LETTER	RW
2	09/30/05	REVISED TO 2004 FBC	EW
1	12/22/03	EDIT PER DADE LETTER	WH

RW BUILDING CONSULTANTS, INC.
813.659.9197

DATE: 7/23/03
SCALE: NTS
DWG. BY: ROF
CHK. BY: RW
DRAWING NO.: S-2371
SHEET 4 OF 9

\\Rwbcsrv\rwbc\Proj 000 -250\pf217\S-2371_R4\S-2371-4.dwg

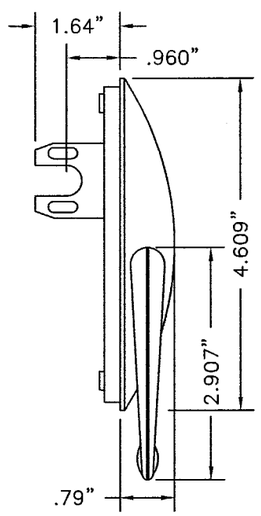

(18) LOCK ASSEMBLY BY TRUTH

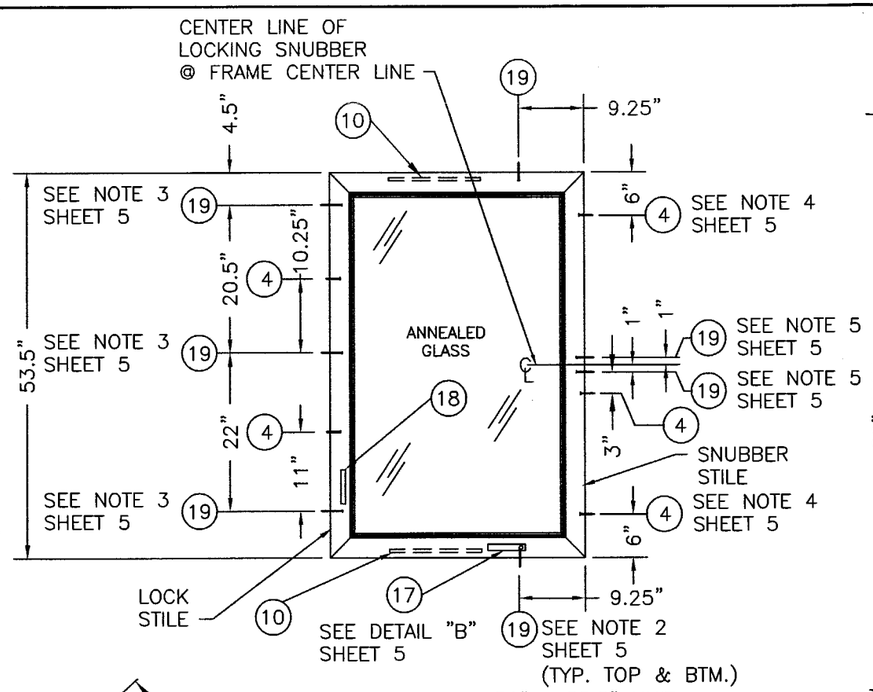

ANCHORING LOCATIONS 36" x 53.5" UNIT
VIEWED FROM INTERIOR

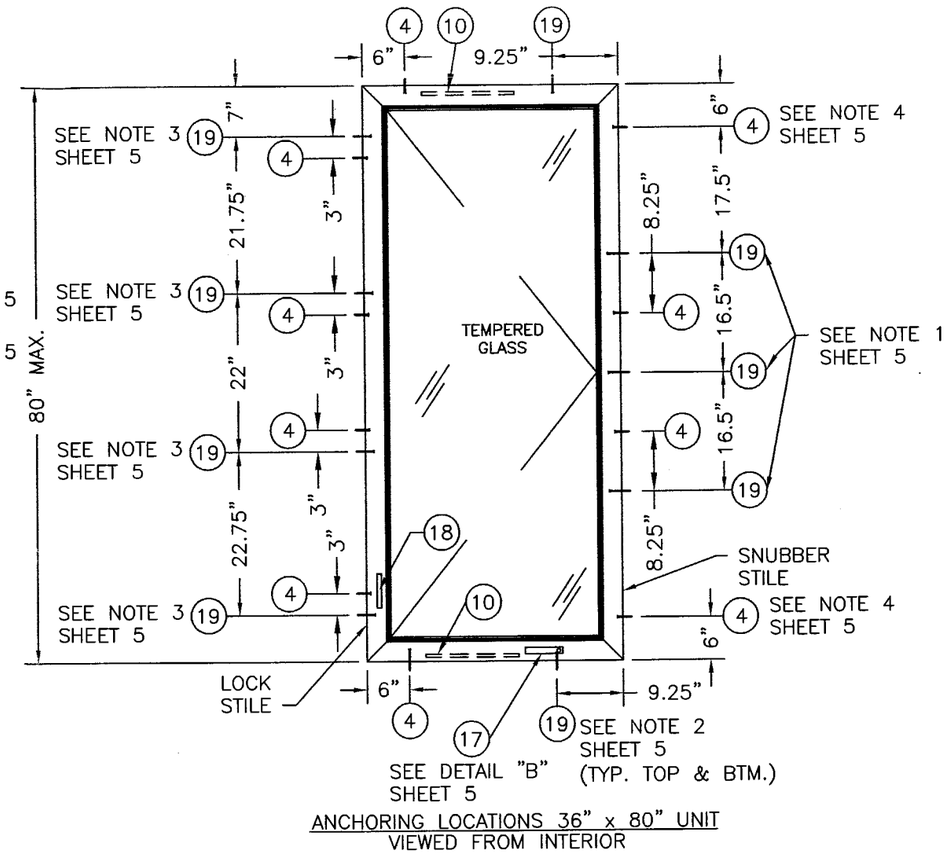

ANCHORING LOCATIONS 36" x 80" UNIT
VIEWED FROM INTERIOR

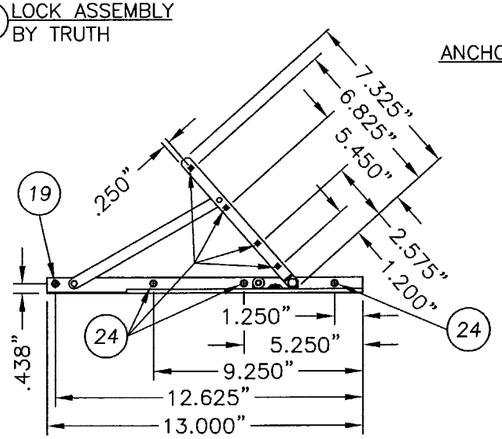

(10) WASHABLE HINGE ASSEMBLY

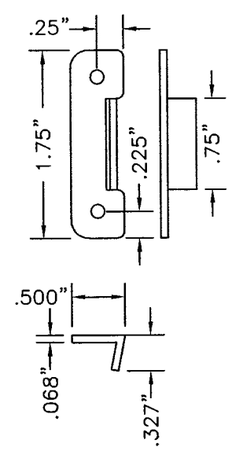

(21) LOCKING SNUBBER
0.068" EXTERIOR WALL

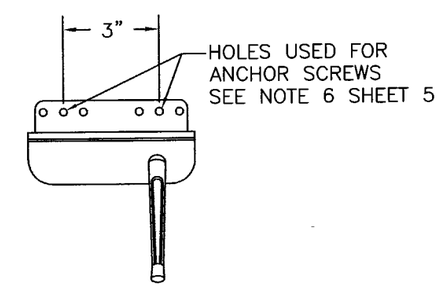

(17) DETAIL "B" DUAL ARM ROTO OPERATOR
(OPERATOR ARMS NOT SHOWN FOR CLARITY)

NOTES:

1. THE ANCHOR SCREWS ON THE SNUBBER STILE ARE ITEM #19, # 8 x 2 1/2" PFH SHEET METAL SCREW. INSTALL SCREWS THROUGH THE TIE LOCKING SNUBBERS.
2. THE ANCHOR SCREWS LOCATED 9.25" FROM THE SNUBBER STILE HEAD & SILL CORNERS ITEM #19, #8 x 2 1/2" SHEET METAL SCREW. INSTALL SCREWS THROUGH THE HINGE TRACK.
3. THE ANCHOR SCREWS ON THE LOCK STILE FRAME SIDE ARE ITEM #41, #8 x 3 1/2" PFH SHEET METAL SCREW. INSTALL SCREWS THROUGH THE TIE BAR GUIDES.
4. THE ANCHOR SCREWS LOCATED 6" FROM SILL & HEAD FROM THE FRAME CORNERS ON THE SNUBBER STILE ARE ITEM #4, A #10 x 2" PFH WOOD SCREW. INSTALL SCREWS THROUGH THE FRAME.
5. THE ANCHOR SCREWS LOCATED 6.5" ABOVE & BELOW THE CENTERLINE OF THE SNUBBER STILES ITEM #19, #8 x 2 1/2" PFH SHEET METAL SCREW. INSTALL SCREWS THROUGH THE TIE LOCKING SNUBBERS.
6. THE SCREWS AT 1.5" FROM THE FRAME CENTER LINE ON THE SILL ARE ITEM #19 FOR 2X BUCK AND ITEM #40 FOR 1X BUCK. THEY ARE GOING THROUGH THE ROTO OPERATOR PLATE.

Approved as complying with the Florida Building Code
Date Nov 10, 2005
NOA# 03-0903.02
Miami Dade Product Control Division
By Shaq I. Chanda

Documents Prepared By:
RW BUILDING CONSULTANTS, INC.
P.O. Box 230 Valrico FL. 33595
Phone No.: 813.659.9197
Florida Board of Professional Engineers
Certificate Of Authorization No. 9813
Wendell W. Haney, P.E. No. 54158
10-20-05

PRODUCT: EXTRUDED VINYL PVC CASEMENT WINDOW

PART OR ASSEMBLY: ANCHORING LOCATIONS

REVISIONS

NO.	DATE		BY
4	10/20/05	REVISED NOTES PER DADE	EW
3	10/17/05	EDIT PER DADE LETTER	RW
2	09/30/05	REVISED TO 2004 FBC	EW
1	12/22/03	EDIT PER DADE LETTER	WH

RW BUILDING CONSULTANTS, INC.
813.659.9197

DATE: 7/23/03
SCALE: NTS
DWG. BY: ROF
CHK. BY: RW
DRAWING NO.: S-2371
SHEET 5 OF 9

\\Rwbcsrv\rwbc\Proj 000 -250\pf217\S-2371_R4\S-2371-5.dwg

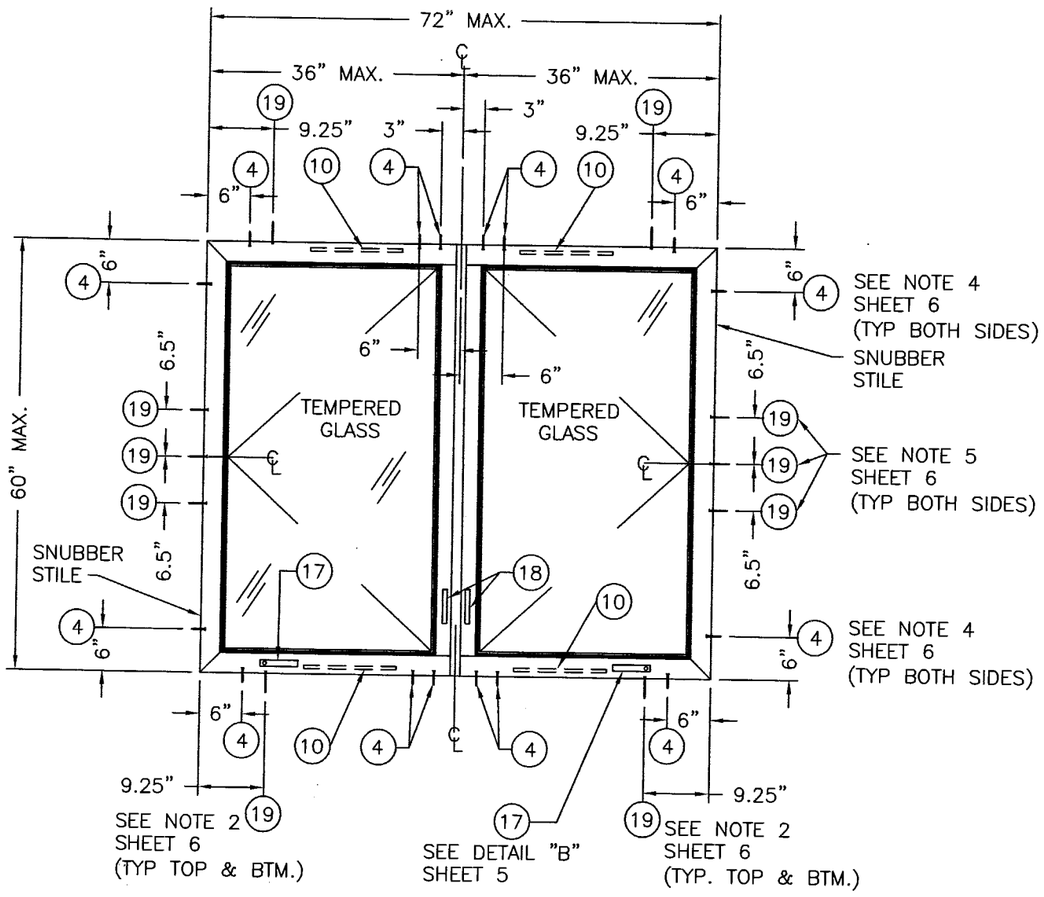

ANCHORING LOCATIONS 72" x 60" OPERABLE TWIN MULLED UNIT
VIEWED FROM INTERIOR

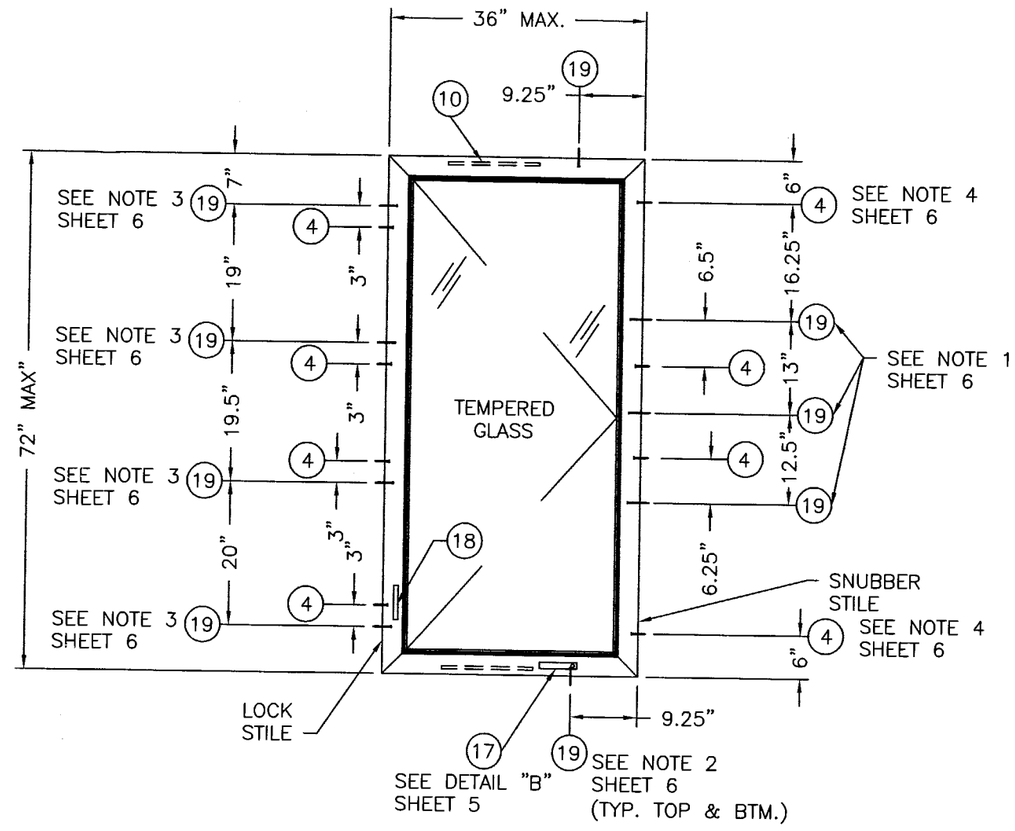

ANCHORING LOCATIONS 36" x 72" UNIT
VIEWED FROM INTERIOR

NOTES:

1. THE ANCHOR SCREWS ON THE SNUBBER STILE ARE ITEM #19, # 8 x 2 1/2" PFH SHEET METAL SCREW. INSTALL SCREWS THROUGH THE TIE LOCKING SNUBBERS.
2. THE ANCHOR SCREWS LOCATED 9.25" FROM THE SNUBBER STILE HEAD & SILL CORNERS ITEM #19, #8 x 2 1/2" SHEET METAL SCREW. INSTALL SCREWS THROUGH THE HINGE TRACK.
3. THE ANCHOR SCREWS ON THE LOCK STILE FRAME SIDE ARE ITEM #41, #8 x 3 1/2" PFH SHEET METAL SCREW. INSTALL SCREWS THROUGH THE TIE BAR GUIDES.
4. THE ANCHOR SCREWS LOCATED 6" FROM SILL & HEAD FROM THE FRAME CORNERS ON THE SNUBBER STILE ARE ITEM #4, A #10 x 2" PFH WOOD SCREW. INSTALL SCREWS THROUGH THE FRAME.
5. THE ANCHOR SCREWS LOCATED 6.5" ABOVE & BELOW THE CENTERLINE OF THE SNUBBER STILES ITEM #19, #8 x 2 1/2" PFH SHEET METAL SCREW. INSTALL SCREWS THROUGH THE TIE LOCKING SNUBBERS.
6. THE SCREWS AT 1.5" FROM THE FRAME CENTER LINE ON THE SILL ARE ITEM #19 FOR 2X BUCK AND ITEM #40 FOR 1X BUCK. THEY ARE GOING THROUGH THE ROTO OPERATOR PLATE.

Approved as complying with the Florida Building Code
Date Nov 10, 2005
NOA# 03-0903.02
Miami Dade Product Control Division
By Ishag I. Chanda

Documents Prepared By:
RW BUILDING CONSULTANTS, INC.
P.O. Box 230 Valrico FL. 33595
Phone No.: 813.659.9197
Florida Board of Professional Engineers
Certificate Of Authorization No. 9813
Wendell W. Haney, P.E. No. 54158
10-20-05

PRODUCT: EXTRUDED VINYL PVC CASEMENT WINDOW

PART OR ASSEMBLY: ANCHORING LOCATIONS

NO.	DATE	REVISIONS	BY
4	10/20/05	REVISED NOTES PER DADE	EW
3	10/17/05	EDIT PER DADE LETTER	RW
2	09/30/05	REVISED TO 2004 FBC	EW
1	12/22/03	EDIT PER DADE LETTER	WH

RW BUILDING CONSULTANTS, INC.
813.659.9197

DATE: 7/23/03
SCALE: NTS
DWG. BY: ROF
CHK. BY: RW
DRAWING NO.: S-2371
SHEET 6 OF 9

\\Rwbcsrv\rwbc\Proj 000 -250\pf217\S-2371_R4\S-2371-6.dwg

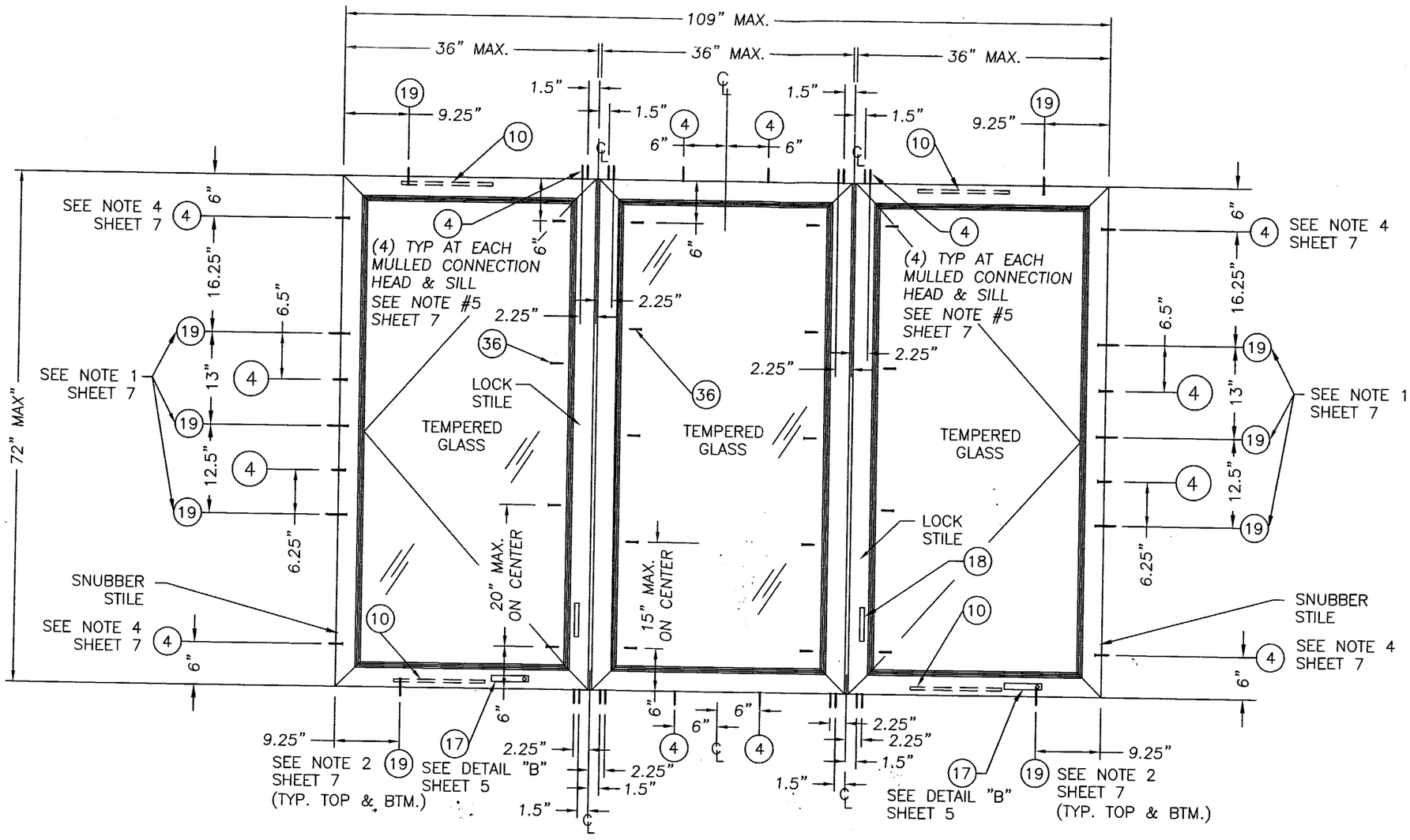

ANCHORING LOCATION 109" X 72" TRIPLE MULLED UNIT
VIEWED FROM INTERIOR

NOTES:

1. THE ANCHOR SCREWS ON THE SNUBBER STILE ARE ITEM #19, # 8 x 2 1/2" PFH SHEET METAL SCREW. INSTALL SCREWS THROUGH THE TIE LOCKING SNUBBERS.
2. THE ANCHOR SCREWS LOCATED 9.25" FROM THE SNUBBER STILE HEAD & SILL CORNERS ITEM #19, #8 x 2 1/2" SHEET METAL SCREW. INSTALL SCREWS THROUGH THE HINGE TRACK.
3. THE ANCHOR SCREWS ON THE LOCK STILE FRAME SIDE ARE ITEM #41, #8 x 3 1/2" PFH SHEET METAL SCREW. INSTALL SCREWS THROUGH THE TIE BAR GUIDES.
4. THE ANCHOR SCREWS LOCATED 6" FROM SILL & HEAD FROM THE FRAME CORNERS ON THE SNUBBER STILE ARE ITEM #4, A #10 x 2" PFH WOOD SCREW. INSTALL SCREWS THROUGH THE FRAME.
5. THE ANCHOR SCREWS LOCATED 6.5" ABOVE & BELOW THE CENTERLINE OF THE SNUBBER STILES ITEM #19, #8 x 2 1/2" PFH SHEET METAL SCREW. INSTALL SCREWS THROUGH THE TIE LOCKING SNUBBERS.

Approved as complying with the Florida Building Code
Date Nov 10, 2005
NOA# 03-0903.03
Miami Dade Product Control Division
By Ishaq I. Chanda

Documents Prepared By:
RW BUILDING CONSULTANTS, INC.
P.O. Box 230 Valrico FL. 33595
Phone No.: 813.659.9197
Florida Board of Professional Engineers
Certificate Of Authorization No. 9813
Wendell W. Haney, P.E. No. 54158
10-20-05

PRODUCT: EXTRUDED VINYL PVC CASEMENT WINDOW

PART OR ASSEMBLY: ANCHORING LOCATIONS

REVISIONS

NO.	DATE		BY
4	10/20/05	REVISED NOTES PER DADE	EW
3	10/17/05	EDIT PER DADE LETTER	RW
2	09/30/05	REVISED TO 2004 FBC	EW
1	12/22/03	EDIT PER DADE LETTER	WH

RW BUILDING CONSULTANTS, INC.
813.659.9197

DATE: 7/23/03
SCALE: NTS
DWG. BY: ROF
CHK. BY: RW
DRAWING NO.: S-2371
SHEET 7 OF 9

\\Rwbcsrv\rwbc\Proj 000 -250\pf217\S-2371_R4\S-2371-7.dwg

BILL OF MATERIALS		
ITEM	DESCRIPTION	MATERIAL
1	EXTRUDED VINYL CASEMENT WINDOW FRAME "SIMEX INC." * WHT. RIGID	VINYL
2	EXTRUDED VINYL GLAZING BEAD "SIMEX INC." * WHT. RIGID	VINYL
3	EXTRUDED VINYL CASEMENT SASH "SIMEX INC." * WHT. RIGID	VINYL
4	#10 x 2" PHILLIPS FLAT HEAD SHEET METAL SCREW	STEEL
5	GLAZING TAPE "VENTURE TAPE INC." #VG316W-G363	–
6	2X SUB BUCK BY OTHERS	WOOD
7	GLAZING COMPOUND "PECORA INC. #896	SILICONE
8	1/4" MAX. CONTINUOS RIGID	METALLIC
9	1X SUB BUCK BY OTHERS	WOOD
10	WASHABLE HINGE ASSEMBLY RIGID (MAXIM SYSTEM)	STEEL
11	GLAZING SETTING BLOCK	–
12	SASH BULB WEATHERSTRIPPING EXTERIOR (ULTRAFAB)	FOAM
13	SASH COMPRESSION WEATHERSTRIPPING INTERIOR (AMESBURY)	VINYL
14	KEEPER (TRUTH HARDWARE)	STEEL
15	1" INSULATED ANNEALED GLASS (SINGLE UNIT DP MAX 57.5 PSF)	GLASS
16	ALIGNMENT SNUBBER (TRUTH HARDWARE)	STEEL
17	ROTO OPERATOR DUALARM BY TRUTH	STEEL
18	LOCK ASSEMBLY BY TRUTH (24-33)	ALUM.
19	#8 x 2 1/2" PHILLIPS FLAT HEAD SHEET METAL SCREW	STEEL
20	TIE BAR & TIE BAR GUIDE	PLASTIC/STEEL
21	LOCKING SNUBBER (TRUTH HARDWARE)	STEEL
22	#8 x 1/2" PHILLIPS PAN HEAD SHEET METAL SCREW	STEEL
23	#8 x 3/4" PHILLIPS FLAT HEAD SHEET METAL SCREW	STEEL
24	#7 x 1/2" PHILLIPS FLAT HEAD SHEET METAL SCREW	STEEL
25	#8 x 2 1/2" PHILLIPS FLAT HEAD SHEET METAL SCREW	STEEL
26	#12 X 3" PHILLIPS PAN HEAD SHEET METAL SCREW	STEEL
27	#8 X 1 1/4" PHILLIPS FLAT HEAD SHEET METAL SCREW	STEEL
28	I MULLION COVER #IV1558 EXTRUDED VINYL .079" MIN.	STEEL
29	I MULL REINFORCEMENTS #16991 6063-T5 FULL LENGTH	ALUM.
30	EXTRUDED VINYL FRAME T-MULL	STEEL
31	EXTRUDED VINYL T-MULL REINFORCEMENT 6063-T5 FULL LENGTH	ALUM.
32	1/4" X 3 1/4" TAPCON ANCHOR	STEEL
33	SILICONE CAULK	SILICONE
34	1/4" X 5" ELCO TAPCON ANCHOR	STEEL
35	1" INSULATED TEMPERED GLASS	GLASS
36	#8 X 1 3/4" PHILLIPS UNDER-CUT FLAT HEAD SCREW	STEEL
37	EXTRUDED VINYL FIXED CASEMENT FRAME "SIMEX INC." * WHT. RIGID	VINYL
38	#8 x 2-1/4" PHILLIPS FLAT HEAD SHEET METAL SCREW	STEEL
39	1/2" INTERCEPT SPACER (0.0105" TIN PLATE STEEL T-3)	STEEL
40	3/16" x 3-3/4" TAPCON	STEEL
41	#8 x 3 1/2" PHILLIPS FLAT HEAD WOOD SCREW	STEEL

* THE APPROVED WHITE RIGID PVC EXTERIOR EXTRUSIONS FOR WINDOWS ARE TO BE PRODUCED BY EXTRUDER LICENSED IN AAMA CERTIFICATION PROGRAMS FOR RIGID PVC EXTRUSIONS WITH "MIAMI-DADE COUNTY". EXTRUSION TO BE LABELED WITH AAMA'S PVC EXTRUSION CERTIFICATE LABEL, EXTRUSION CODE & "MDCA".

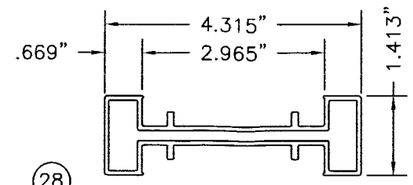

(28) LARGE MULLION COVER #IV1558
EXTRUDED VINYL .079 MIN.

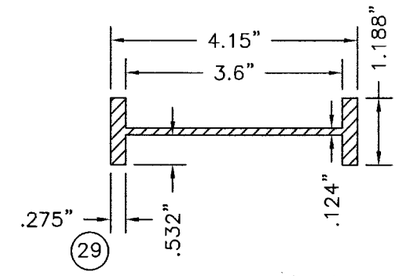

(29) I-MULL REINFORCEMENT
#16991 6063-T5

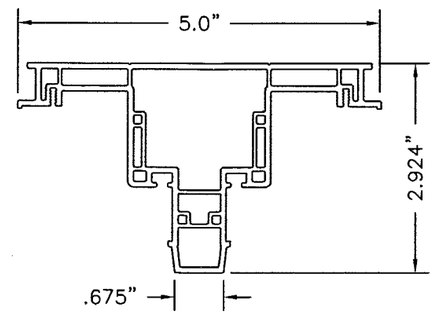

(30) EXTRUDED VINYL T-MULL
0.084" MAX. & 0.051" MIN. WALL
CA0819

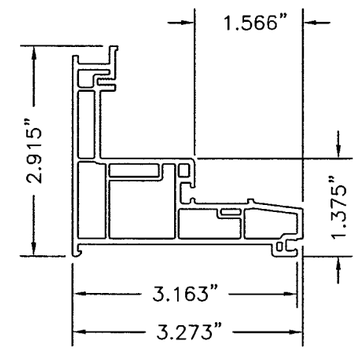

(1) EXTRUDED VINYL CASEMENT FRAME
0.078" MAX. WALL
0.057" MIN. WALL
CA0901

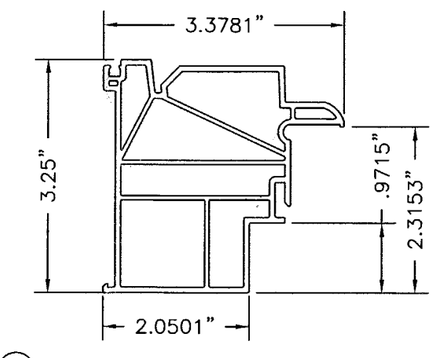

(37) EXTRUDED VINYL FIXED FRAME
0.079" MAX. WALL
0.059" MIN. WALL
PW0901

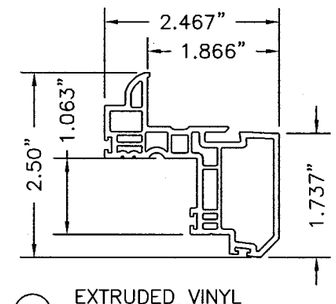

(3) EXTRUDED VINYL
CASEMENT SASH
0.078" MAX. WALL
0.051" MIN. WALL
SE-0852

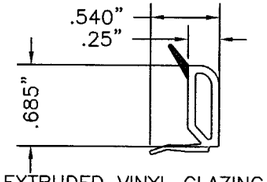

(2) EXTRUDED VINYL GLAZING BEAD
0.059" MAX. WALL BV-68

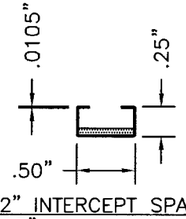

(39) 1/2" INTERCEPT SPACER
0.0105" TIN PLATE STEEL T-3

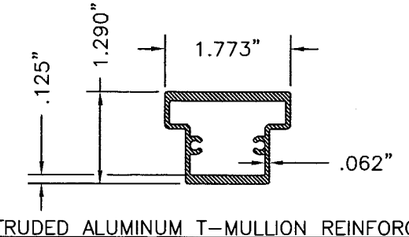

(31) EXTRUDED ALUMINUM T-MULLION REINFORCEMENT
#59457

Approved as complying with the Florida Building Code
Date Nov 10, 2005
NOA# 03-0903.03
Miami Dade Product Control Division
By [signature]

Documents Prepared By:
RW BUILDING CONSULTANTS, INC.
P.O. Box 230 Valrico FL. 33595
Phone No.: 813.659.9197
Florida Board of Professional Engineers
Certificate Of Authorization No. 9813
Wendell W. Haney, P.E. No. 54158
10-20-05

PRODUCT: EXTRUDED VINYL PVC CASEMENT WINDOW

PART OR ASSEMBLY: COMPONENTS & BILL OF MATERIAL

NO.	DATE	REVISIONS	BY
4	10/20/05	REVISED NOTES PER DADE	EW
3	10/17/05	EDIT PER DADE LETTER	RW
2	09/30/05	REVISED TO 2004 FBC	EW
1	12/22/03	EDIT PER DADE LETTER	WH

RW BUILDING CONSULTANTS, INC.
813.659.9197

DATE: 7/23/03
SCALE: NTS
DWG. BY: ROF
CHK. BY: RW
DRAWING NO.: S-2371
SHEET 8 OF 9

\\Rwbcsrv\rwbc\Proj 000 -250\pf217\S-2371_R4\S-2371-8.dwg

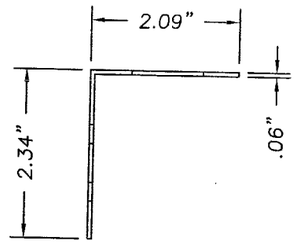

L-BRACKET
1" WIDE STEEL

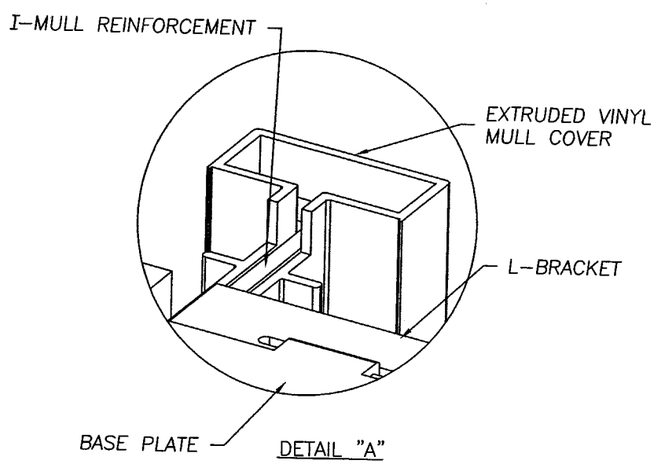

DETAIL "A"

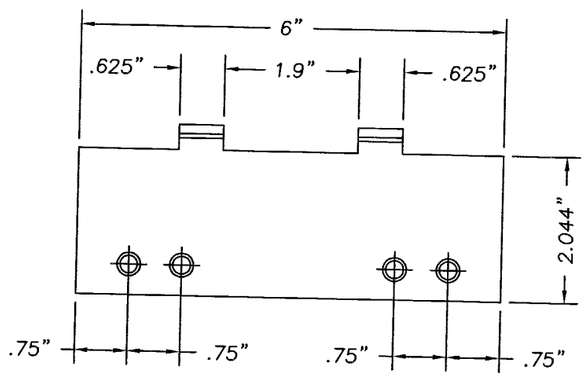

REINFORCEMENT BASE PLATE DETAIL
.060" MIN. STEEL

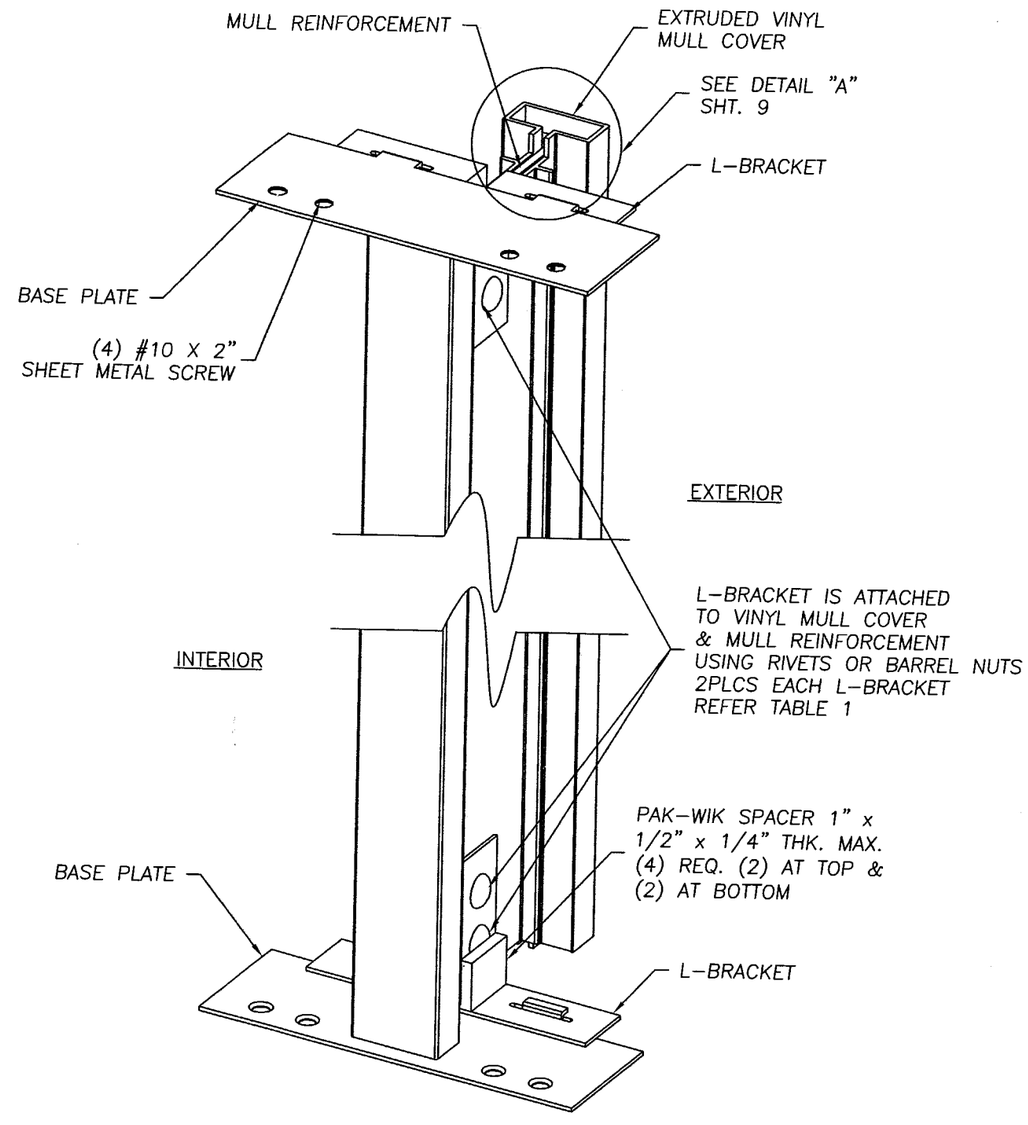

ASSEMBLED I MULL AND ATTACHMENT VIEW

Documents Prepared By:
RW BUILDING CONSULTANTS, INC.
P.O. Box 230 Valrico FL. 33595
Phone No.: 813.659.9197
Florida Board of Professional Engineers
Certificate Of Authorization No. 9813
Wendell W. Haney, P.E. No. 54158
10-20-05

PRODUCT: EXTRUDED VINYL PVC CASEMENT WINDOW

PART OR ASSEMBLY: ASSEMBLED MULL & ATTACHMENT VIEW

NO.	DATE	REVISIONS	BY
4	10/20/05	REVISED NOTES PER DADE	EW
3	10/17/05	EDIT PER DADE LETTER	RW
2	09/30/05	REVISED TO 2004 FBC	EW
1	12/22/03	EDIT PER DADE LETTER	WH

RW BUILDING CONSULTANTS, INC.
813.659.9197

Approved as complying with the Florida Building Code
Date NOV 01 2005
NOA# 03-0903.03
Miami Dade Product Control Division
By Shaq L. Chanda

DATE: 8/23/03
SCALE: NTS
DWG. BY: ROF
CHK. BY: RW
DRAWING NO.: S-2371
SHEET 9 OF 9

\\Rwbcsrv\rwbc\Proj 000 -250\pf217\S-2371_R4\S-2371-9.dwg