MIAMI-DADE COUNTY
BUILDING CODE COMPLIANCE OFFICE (BCCO)
PRODUCT CONTROL DIVISION

MIAMI-DADE COUNTY, FLORIDA
METRO-DADE FLAGLER BUILDING
140 WEST FLAGLER STREET, SUITE 1603
MIAMI, FLORIDA 33130-1563
(305) 375-2901 FAX (305) 375-2908
www.buildingcodeonline.com

NOTICE OF ACCEPTANCE (NOA)

Dorma Architectural Hardware
1003 West Broadway
Steeleville, IL 62288

SCOPE:

This NOA is being issued under the applicable rules and regulations governing the use of construction materials. The documentation submitted has been reviewed by Miami-Dade County Product Control Division and accepted by the Board of Rules and Appeals (BORA) to be used in Miami Dade County and other areas where allowed by the Authority Having Jurisdiction (AHJ).

This NOA shall not be valid after the expiration date stated below. The Miami-Dade County Product Control Division (In Miami Dade County) and/or the AHJ (in areas other than Miami Dade County) reserve the right to have this product or material tested for quality assurance purposes. If this product or material fails to perform in the accepted manner, the manufacturer will incur the expense of such testing and the AHJ may immediately revoke, modify, or suspend the use of such product or material within their jurisdiction. BORA reserves the right to revoke this acceptance, if it is determined by Miami-Dade County Product Control Division that this product or material fails to meet the requirements of the applicable building code.

This product is approved as described herein, and has been designed to comply with the Florida Building Code, including the High Velocity Hurricane Zone.

DESCRIPTION: Dorma's Series "9000" panic exit devices-Component Approval

APPROVAL DOCUMENT: Drawing No. **9000DADE,** titled "9300, 9400 & 9500 Series", sheets 1 through 4 of 4, dated 12/02/2005 and last revised on 01-17-2006, prepared by R. W. Building Consultants Inc., signed and sealed by Wendell W. Haney, P.E ., bearing the Miami-Dade County Product Control Revision stamp with the Notice of Acceptance number and expiration date by the Miami-Dade County Product Control Division.

MISSILE IMPACT RATING: Large and Small Missile Impact Resistant

LABELING: Each unit shall bear a permanent label with the manufacturer's name or logo, city, state and following statement: "Miami-Dade County Product Control Approved", unless otherwise noted herein.

RENEWAL of this NOA shall be considered after a renewal application has been filed and there has been no change in the applicable building code negatively affecting the performance of this product.

TERMINATION of this NOA will occur after the expiration date or if there has been a revision or change in the materials, use, and/or manufacture of the product or process. Misuse of this NOA as an endorsement of any product, for sales, advertising or any other purposes shall automatically terminate this NOA. Failure to comply with any section of this NOA shall be cause for termination and removal of NOA.

ADVERTISEMENT: The NOA number preceded by the words Miami-Dade County, Florida, and followed by the expiration date may be displayed in advertising literature. If any portion of the NOA is displayed, then it shall be done in its entirety.

INSPECTION: A copy of this entire NOA shall be provided to the user by the manufacturer or its distributors and shall be available for inspection at the job site at the request of the Building Official.

This NOA **revises # 01-0423.02** consists of this page 1 and evidence page E-1 & E-2, as well as approval document mentioned above.

The submitted documentation was reviewed by **Ishaq I. Chanda, P.E.**

PRODUCT CONTROL ACCEPTED

1/24/6

Dorma Architectural Hardware

NOTICE OF ACCEPTANCE: EVIDENCE SUBMITTED

A. DRAWINGS

1. Manufacturer's parts and sections drawings.
2. Drawing No. **9000DADE,** titled "9300, 9400 & 9500 Series", sheets 1 through 4 of 4, dated 12/02/2005 and last revised on 01-17-2006, prepared by R. W. Building Consultants Inc., signed and sealed by Wendell W. Haney, P.E.

B. TESTS

1. Test reports on 1) Air Infiltration Test, per FBC, TAS 202-94
   2) Uniform Static Air Pressure Test, Loading per FBC, TAS 202-94
   3) Water Resistance Test, per FBC, TAS 202-94 (Not Performed)
   4) Large Missile Impact Test per FBC, TAS 201-94
   5) Cyclic Wind Pressure Loading per FBC, TAS 203-94
   6) Forced Entry Test, per FBC 3603.2 (b) and TAS 202-94

   Along with marked-up drawings and installation diagram of Dorma's series 9000 panic devices in the Benchmark HMF's hollow metal doors, prepared by Certified Testing Laboratories, Inc., Test Report No. **CTLA-1089W**, dated April 21, 2003, signed and sealed by Ramesh Patel, P.E.
   (Note: This test report has been revised by addendum letter dated November 10, 2003, issued by Certified Testing Lab, Inc, signed & sealed by Ramesh Patel, P.E.)
2. Test reports (original test conducted under PA 201, 202 & 203-94, now termed as TAS 201, 202 & 203-94, submitted for file # **01-0423.02**))
   Test reports on 1) Air Infiltration Test, per FBC, TAS 202-94
   2) Uniform Static Air Pressure Test, Loading per FBC, TAS 202-94
   3) Water Resistance Test, per FBC, TAS 202-94
   4) Large Missile Impact Test per FBC, TAS 201-94
   5) Cyclic Wind Pressure Loading per FBC, TAS 203-94
   6) Forced Entry Test, per FBC 3603.2 (b) and TAS 202-94

   Along with marked-up drawings and installation diagram of Dorma's series 9000 panic devices in the Dorma's hollow metal doors, prepared by Architectural Testing Laboratory, Inc., Test Report No. **ATI-0137581.01, ATI-0137581.02 and ATI-0137581.04,** dated March 15 & March 16, 2001, signed and sealed by Allen N. Reeves, P.E.
   (Note: This test report has been revised by Addendum letter dated 08 October, 2001 for test reports **ATI-0137581.01, 02, 03** and **04,** issued by Architectural Testing Laboratory, signed and sealed by Allen N. Reeves, P.E.)

C. CALCULATIONS:

1. Mullion anchor verification calculation (FBC-2004), prepared by R. W. Building Consultants Inc., dated 09/29/05 and last revised on 12-02-05, signed and sealed by Wendell W. Haney, P.E.

Ishaq I. Chanda

Ishaq I. Chanda, P.E.
Product Control Examiner
NOA No 03-0911.04
Expiration Date January 03, 2007
Approval Date: January 05, 2006

NOTICE OF ACCEPTANCE: EVIDENCE SUBMITTED

D. QUALITY ASSURANCE

1. Miami Dade Building Code Compliance Office (BCCO)

E. MATERIAL CERTIFICATIONS

1. None.

F. STATEMENTS

1. Letter of authorization issued by Benchmark HMF, dated March 09, 2004, allowing Dorma Architectural Hardware Inc to use test report CTLA-1089W to obtain component approval, signed by Maynard Rumuly.
2. Letter of conformance & "No financial interest" dated December 15, 2005, signed and sealed by Wendell W. Haney, P. E.
3. Statement letter of Lab compliance, part of test report, issued by Certified Testing Laboratories, signed and sealed by Ramesh Patel, P.E
4. Statement letter of Lab compliance, dated March 16th & 18th, 2000, issued by architectural Testing laboratory, signed and sealed by Allen N. Reeves, P.E.
5. Addendum letter dated November 10, 2003 for test reports **CTLA-1089W,** issued by Certified Testing Laboratories, signed and sealed by Ramesh Patel, P.E.
6. Addendum letter dated 08 October, 2001 for test reports **ATI-0137581.01, 02, 03** and **04,** issued by Architectural Testing Laboratory, signed and sealed by Allen N. Reeves, P.E.

F. OTHER:

1. This NOA revises NOA # 01-0423.02, expiring January 03, 2007.
2. Benchmark HMF letter of test report authorization.
3. Proposal 00-0029 dated March 07, 2000 approved by this office.
4. Dorma's panic exit device technical publications and catalogs.

Ishaq I. Chanda

Ishaq I. Chanda, P.E.
Product Control Examiner
NOA No 03-0911.04
Expiration Date January 03, 2007
Approval Date: January 05, 2006

9300 SERIES RIM DEVICE INSTALLATION FOR HURRICANE CODE FOR SINGLE OR PAIR APPLICATION

BILL OF MATERIAL

ITEM	DESCRIPTION	PART NUMBER	QTY.
1	APPROVED DOOR & FRAME	UNDER SEPERATE NOA	1
2	9300 RIM CHASSIS ASSY.	SEE NOTES	1
3	TOUCHBAR/RAIL ASSY.		1
4	THRU BOLTS		4
5	ENDCAP BRACKET		1
6	OUTSIDE TRIM		1
7	ENDCAP		1
8	CHASSIS COVER		1
9	STRIKE ANGLE		1
10	12–24 R.H.P.M.S.		8
11	8–32 F.H.P.M.S.		6
12	12–24 F.H.P.M.S.		6
13	HINGE		4
14	#463 STRIKE	SEE NOTES	1
15	2"x3"Removable St'l. Mullion	F1300/Fy=46KSI min.	1
16	Mullion Top Fitting		1
17	Mullion Bottom Fitting		1
18	Anchor Adaptor	1/4" thk. steel	1

CHASSIS ASSEMBLY MATERIAL: INVESTMENT CAST 1020 STEEL, BOLT 304 STAINLESS
STRIKE MATERIAL: 701 SANDCAST MALLEABLE IRON FERRATIC GRADE 32510

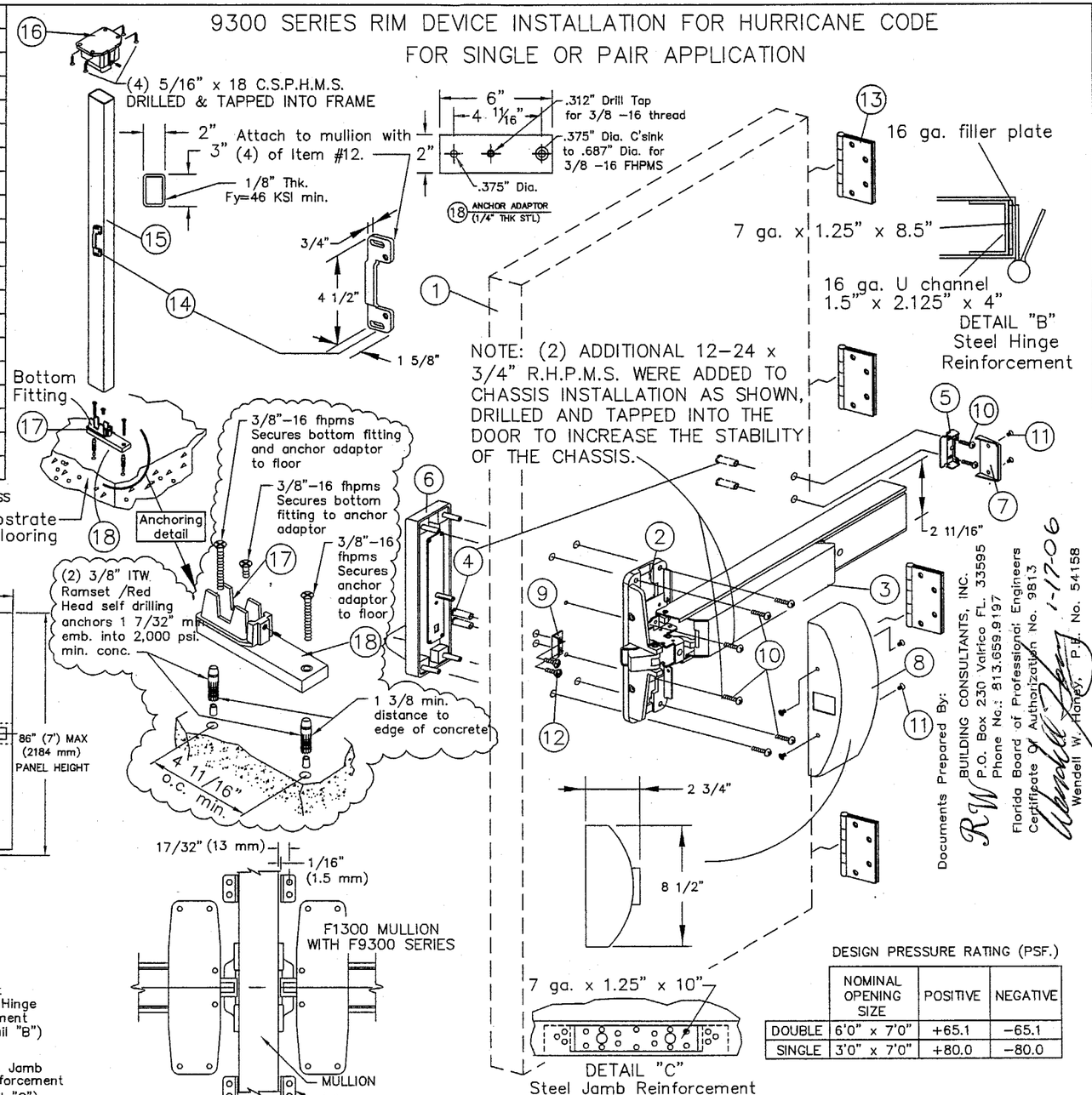

DESIGN PRESSURE RATING (PSF.)

	NOMINAL OPENING SIZE	POSITIVE	NEGATIVE
DOUBLE	6'0" x 7'0"	+65.1	–65.1
SINGLE	3'0" x 7'0"	+80.0	–80.0

GENERAL NOTES

LIMITATIONS:

1. Each of this device is approved to be used as equal alternate to corresponding lock approved to be used in applicable 16 ga Outswing Steel Doors holding a current Notice of Acceptance. The lowest Design Pressure Rating shall apply.
2. This device shall be installed in a 18 ga commercial steel door panel no wider and higer than shown in these approved drawings.
3. Installation of this device requires steel reinforcements as indicated.
4. Electrical devices are not part of this approval and must be reviewed by corresponding authority.

Certification:
Underwriter's Laboratories – UL10C, UBC 7–2 (1997)
ANSI/BHMA A156.3 Grade 1 Exit Device

3/4" Minimum latchbolt throw

- Frame 16 ga. min.
- Door 18 ga. min.
- Hinge / Jamb reinforcment 7 ga. min.
- Lock stile / hinge stile, panic reinforcment box 14 ga. min.

All reinforcements to to spot welded or better by door manufacturer.

All dimensions in accordance with manufacturer's standard installation instructions.

Exit device Model 9300 Series Rim Outside trim may be one of the following designations:
WODT, W102, W302, W003, W103, W303, W122, W322, W105, W305, YODT, YK02, YR02, YT02, YC02, Y003, YK03R, YR03R, YYT03R, YC03R, YK03, YR03, YT03 YC03, YK08, YR08, YT08, YC08, YK23, YR23, YT23, or YC23.

Thru bolts must be used on all installations as shown.
Interlocking strike angle must be installed on all installations as shown.

Documents Prepared By:
RW BUILDING CONSULTANTS, INC.
P.O. Box 230 Valrico FL. 33595
Phone No.: 813.659.9197
Florida Board of Professional Engineers
Certificate Of Authorization No. 9813
Wendell W. Haney, P.E. No. 54158
1-17-06

PRODUCT REVISED
as complying with the Florida Building Code
Acceptance No 03-0911.04
Expiration Date JANUARY 03, 2007
By Ishay I. Chanda
Miami Dade Product Control Division

DESCRIPTION: 9300 SERIES SINGLE & DBL. DOOR	
MATERIAL:	
COIL WIDTH:	
PROGRESSION:	
WEIGHT:	
FINISH:	
SCALE: NONE	DRAWN BY: T.A.

TOLERANCE: UNLESS NOTED OTHERWISE
DECIMALS .XXX----±.005
DECIMALS .XX-----±.010
FRACTIONS--------±1/64
ANGLES----------±2°

DATE: 12–20–00

DORMA
DORMA DOOR CONTROLS INC
1003 W. BROADWAY
STEELEVILLE, ILLINOIS 62288

CHKD BY: DATE:

REVISIONS	NO.	BY	DATE
Rev. Per Dade Letter	5	EW	11–30–05
Rev. mull fitting	4	EW	6–30–05
Revised Mullion	3	WH	2–9–05
Revised PSI	2	TJH	8–15–03
Revised Print	1	TA	9–1–01

DWG. 1 OF 4
DWG. NO. 9000DADE

R:\PROJ 000 -250\PF245\9000DADE_12-01-05-R5\9000DADEI-REV5.DWG

9400 OR 9400/9400 SERIES SURFACE VERTICAL ROD APPLICATION FOR SINGLE OR PAIRS FOR HURRICANE CODE

TYPICAL SURFACE VERTICAL ROD INSTALLATION
LEFT HAND REVERSE BEVEL SHOWN
RIGHT HAND REVERSE BEVEL OPPOSITE

BILL OF MATERIAL

ITEM	DESCRIPTION	PART NUMBER	QTY.
1	APPROVED DOOR & FRAME	UNDER SEPERATE NOA	1
2	9400 CHASSIS ASSY.	ALUMINUM	1
3	TOUCHBAR/RAIL ASSY.		1
4	THRU BOLTS		8
5	ENDCAP BRACKET		1
6	OUTSIDE TRIM		1
7	ENDCAP		1
8	CHASSIS COVER		1
9	STRIKE ANGLE	STAINLESS STEEL	1
10	12-24 R.H.P.M.S.		12
11	8-32 F.H.P.M.S.		10
12	ROD RETAINING PLATE		2
13	HINGES		3
14	TOP LATCH ASSEMBLY	STEEL	1
15	#426 TOP STRIKE PACK	SANDCAST GRAY IRON CLASS 20	1
16	TOP CONNECTING ROD	1/2" O.D. STAINLESS TUBING	1
17	BOTTOM CONNECTING ROD	1/2" O.D. STAINLESS TUBING	1
18	8-32 x 3/4" R.H.P.M.S.		2
19	BOTTOM LATCH BRACKET		1
20	SLIDE BOLT ASSEMBLY	STEEL	1
21	LATCH COVER		2
22	#340 BOTTOM STRIKE PACK	STEEL	8
23	ROD GUIDE		2
24	#6 x 1 1/4" F.H.P.T.S.		4
25	ROD GUIDE COVER		2

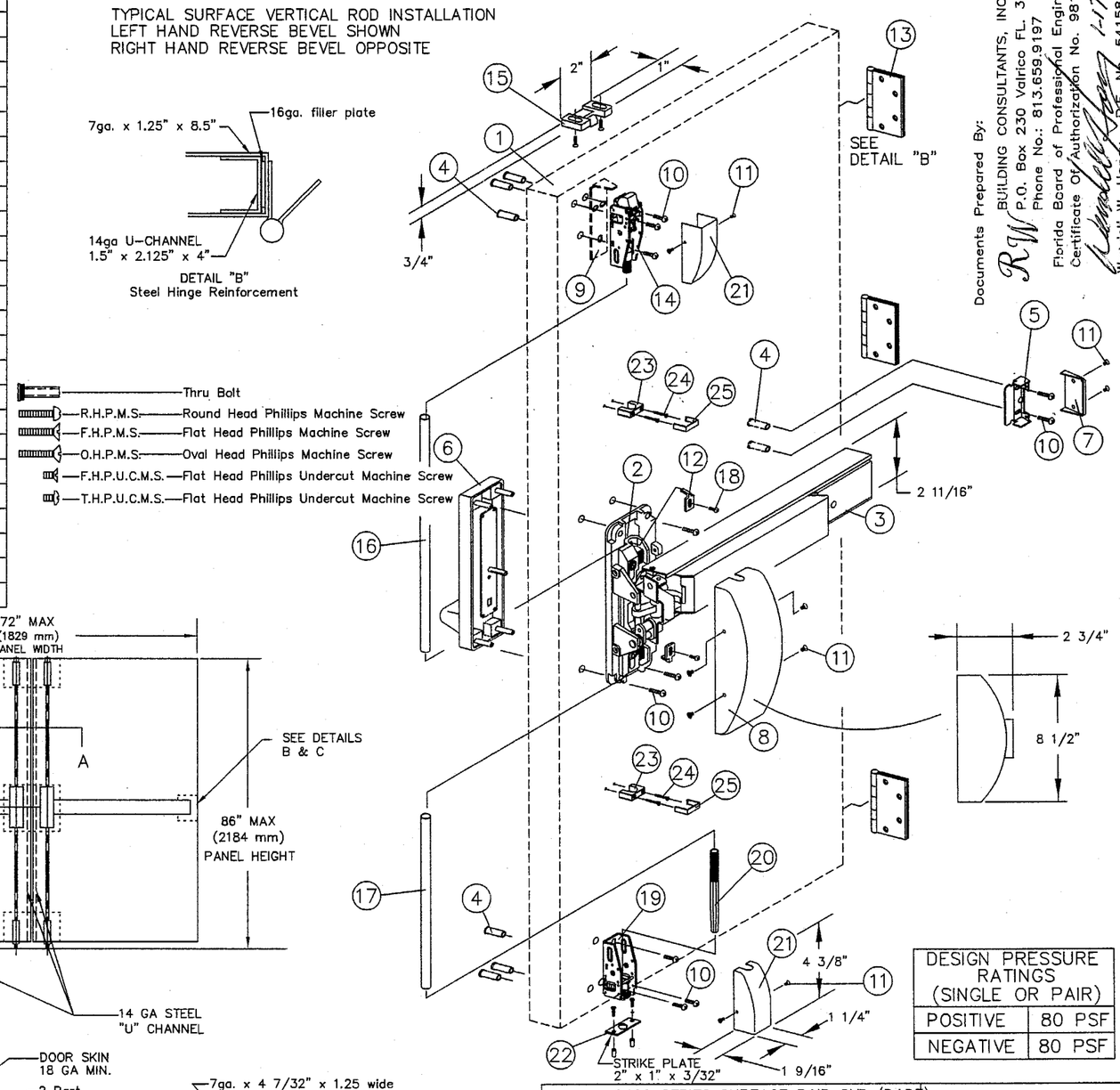

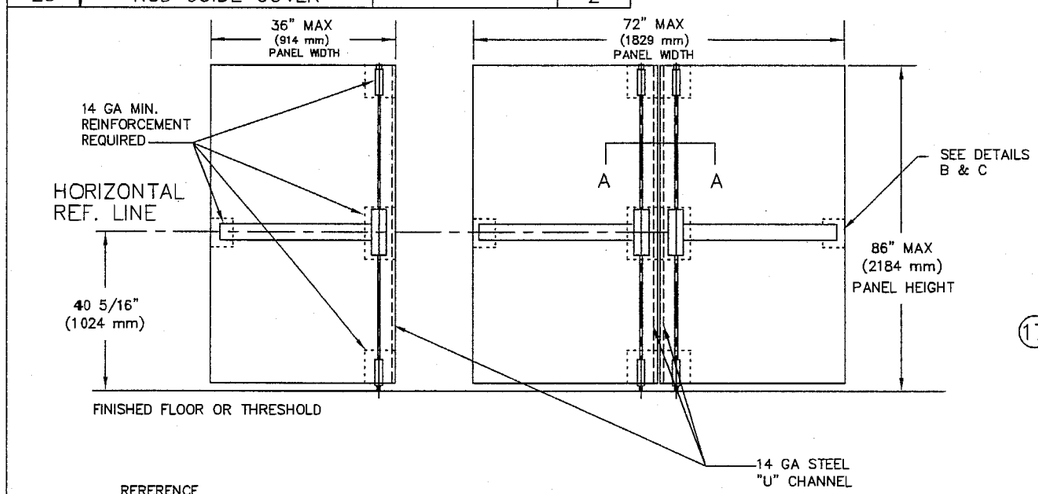

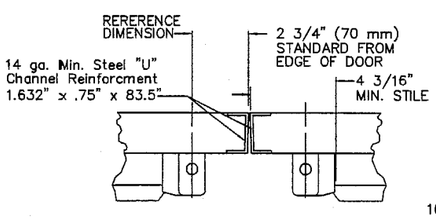

VERTICAL REF. LINE SECTION A–A

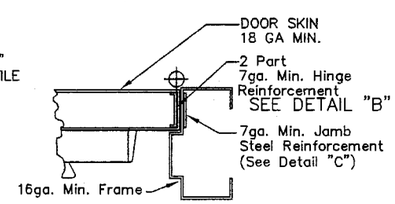

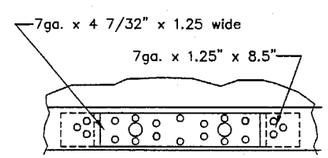

DETAIL "C"
Steel Jamb Reinforcement

DESIGN PRESSURE RATINGS (SINGLE OR PAIR)	
POSITIVE	80 PSF
NEGATIVE	80 PSF

Documents Prepared By:
RW BUILDING CONSULTANTS, INC.
P.O. Box 230 Valrico FL. 33595
Phone No.: 813.659.9197
Florida Board of Professional Engineers
Certificate Of Authorization No. 9813
Wendell W. Harpey, P.E. No. 54158
1-17-06

GENERAL NOTES

LIMITATIONS:

1. Each of this device is approved to be used as equal alternate to corresponding lock approved to be used in applicable 16 ga Outswing Steel Doors holding a current Notice of Acceptance. The lowest Design Pressure Rating shall apply.
2. This device shall be installed in a 18 ga commercial steel door panel no wider and higer than shown in these approved drawings.
3. Installation of this device requires steel reinforcements as indicated.
4. Electrical devices are not part of this approval and must be reviewed by corresponding authority.

Certification:
Underwriter's Laboratories – UL10C, UBC 7-2 (1997)
ANSI/BHMA A156.3 Grade 1 Exit Device
3/4" Minimum latchbolt throw
Frame 16 GA minimum.
Strike, hinge & header 16 GA minimum reinforcement.
Door 18 GA minimum.
Lock stile, hinge stile, panic reinforcement box 14 GA minimum.
All reinforcements to to spot welded or better by door manufacturer.
All dimensions in accordance with manufacturer's standard installation instructions.
Exit device Model 9400 Series Surface Vertical Rod
Outside trim may be one of the following designations:
WODT, W102, W302, W003, W103, W303, W122, W322, W105, W305, YODT, YK02, YR02, YT02, YC02, Y003, YK03R, YR03R, YYT03R, YC03R, YK03, YR03, YT03 YC03, YK08, YR08, YT08, YC08, YK23, YR23, YT23, or YC23.
Thru bolts must be used on all installations as shown.
Interlocking strike angle must be installed on all installations as shown.
Bill of materials is for one door.
All quantities will double for opposite door of pair.

PRODUCT REVISED
as complying with the Florida Building Code
Acceptance No 03-0911.04
Expiration Date JAN 03, 2007
By Ishaq I. Lhanda
Miami Dade Product Control Division

REVISIONS	NO.	BY	DATE
Rev. Per Dade Letter	5	EW	11-30-05
Rev. mull fitting	4	EW	6-30-05
Revised Mullion	3	WH	2-9-05
Revised PSI	2	TJH	8-15-03
Revised Print	1	TA	9-1-01

DESCRIPTION: 9400 SERIES SURFACE PAIR SVR (DADE)
MATERIAL:
COIL WIDTH:
PROGRESSION:
WEIGHT:
FINISH:
TOLERANCE: UNLESS NOTED OTHERWISE
DECIMALS .XXX-----±.005
DECIMALS .XX------±.010
FRACTIONS---------±1/64
ANGLES----------±2°
SCALE: NONE | DRAWN BY: T.A. | DATE: 01-02-01 | CHKD BY: | DATE:

DORMA
DORMA DOOR CONTROLS INC
1003 W. BROADWAY
STEELEVILLE, ILLINOIS 62288

DWG. 2 OF 4
DWG. NO. 9000DADE

P:\PROJ 000 -250\PF245\9000DADE_12-01-05-R5\9000DADE2-REV5.DWG

9400 SERIES SURFACE VERTICAL ROD & 9500 SERIES MORTISE FOR PAIR APPLICATION TO HURRICANE CODE

TYPICAL SURFACE VERTICAL ROD INSTALLATION
LEFT HAND REVERSE BEVEL, IN-ACTIVE LEAF OF PAIR

BILL OF MATERIAL

ITEM	DESCRIPTION	PART NUMBER	QTY.
1	APPROVED DOOR & FRAME	UNDER SEPERATE NOA	1
2	9400 CHASSIS ASSY.	ALUMINUM	1
3	TOUCHBAR/RAIL ASSY.		1
4	THRU BOLTS		8
5	ENDCAP BRACKET		1
6	OUTSIDE TRIM		1
7	ENDCAP		1
8	CHASSIS COVER		1
9	STRIKE ANGLE	STAINLESS STEEL	1
10	12-24 R.H.P.M.S.		12
11	8-32 F.H.P.M.S.		10
12	ROD RETAINING PLATE		2
13	HINGES		3
14	TOP LATCH ASSEMBLY	STEEL	1
15	#426 TOP STRIKE PACK	SANDCAST GRAY IRON CLASS 20	1
16	TOP CONNECTING ROD	1/2" O.D. STAINLESS TUBING	1
17	BOTTOM CONNECTING ROD	1/2" O.D. STAINLESS TUBING	1
18	8-32 x 3/4" R.H.P.M.S.		2
19	BOTTOM LATCH BRACKET		1
20	SLIDE BOLT ASSEMBLY	STEEL	1
21	LATCH COVER		2
22	#340 BOTTOM STRIKE PACK	STEEL	8
23	ROD GUIDE		2
24	#6 x 1 1/4" F.H.P.T.S.		4
25	ROD GUIDE COVER		2

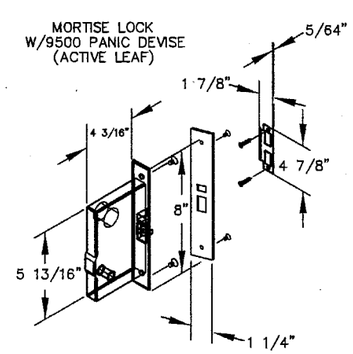

(SEE SHEET 4)

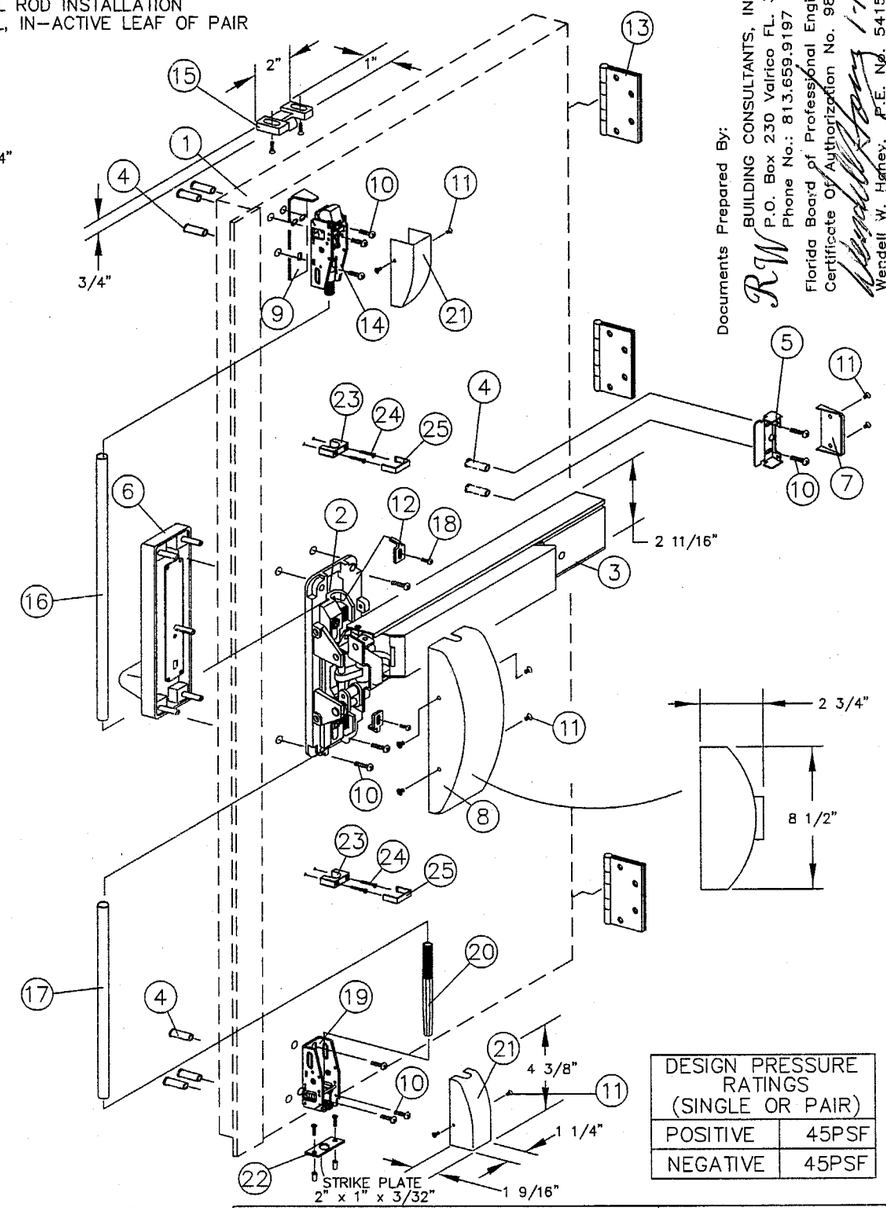

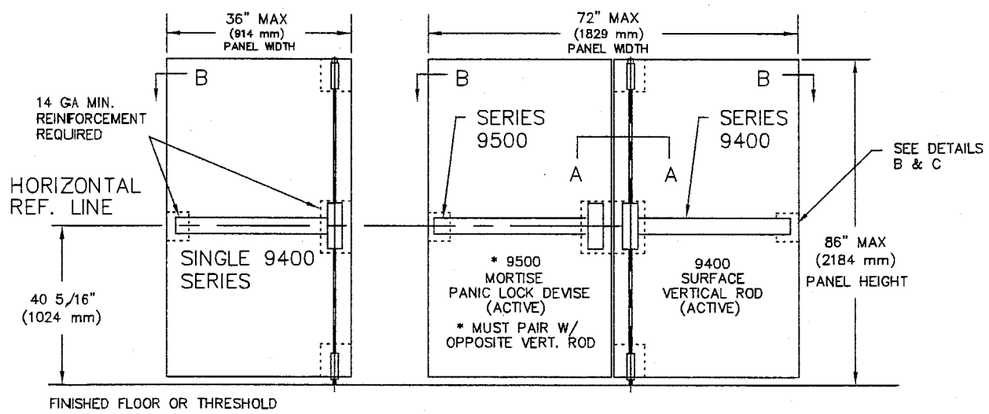

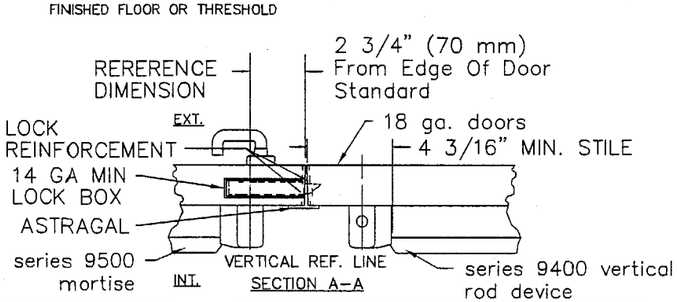

SECTION A-A

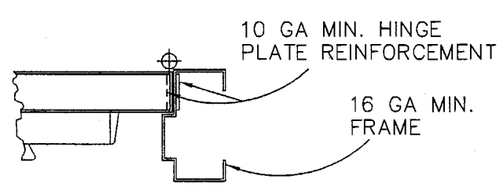

SECTION B-B (HINGE REINFORCEMENT)

DESIGN PRESSURE RATINGS (SINGLE OR PAIR)	
POSITIVE	45PSF
NEGATIVE	45PSF

Documents Prepared By:
RW BUILDING CONSULTANTS, INC.
P.O. Box 230 Valrico FL. 33595
Phone No.: 813.659.9197
Florida Board of Professional Engineers
Certificate Of Authorization No. 9813
Wendell W. Haney, P.E. No. 54158
1-12-06

GENERAL NOTES

LIMITATIONS:

1. Each of this device is approved to be used as equal alternate to corresponding lock approved to be used in applicable 16 ga Outswing Steel Doors holding a current Notice of Acceptance. The lowest Design Pressure Rating shall apply.
2. This device shall be installed in a 18 ga commercial steel door panel no wider and higer than shown in these approved drawings.
3. Installation of this device requires steel reinforcements as indicated.
4. Electrical devices are not part of this approval and must be reviewed by corresponding authority.

Certification:
Underwriter's Laboratories – UL10C, UBC 7-2 (1997)
ANSI/BHMA A156.3 Grade 1 Exit Device
3/4" Minimum latchbolt throw
Frame 16 GA minimum.
Strike, hinge & header 14 GA minimum reinforcement.
Door 18 GA minimum.
Lock stile, hinge stile, panic reinforcement box 14 GA minimum.
All reinforcements to to spot welded or better by door manufacturer.
All dimensions in accordance with manufacturer's standard installation instructions.
Exit device Model 9400 Series Surface Vertical Rod
Outside trim may be one of the following designations:
WODT, W102, W302, W003, W103, W303, W122, W322, W105, W305, YODT, YK02, YR02, YT02, YC02, Y003, YK03R, YR03R, YYT03R, YC03R, YK03, YR03, YT03 YC03, YK08, YR08, YT08, YC08, YK23, YR23, YT23, or YC23.
Thru bolts must be used on all installations as shown.
Interlocking strike angle must be installed on all installations as shown.
Bill of materials is for one door.
All quantities will double for opposite door of pair.

PRODUCT REVISED
as complying with the Florida Building Code
Acceptance No. 03-0911.04
Expiration Date JAN 03, 2007
By Ishaq I. Chanda
Miami Dade Product Control Division

Rev. Per Dade Letter	5	EW	11-30-05
Rev. mull fitting	4	EW	6-30-05
Revised Mullion	3	WH	2-9-05
Revised PSI	2	TJH	8-15-03
Revised Print	1	TA	9-1-01
REVISIONS	NO.	BY	DATE

DESCRIPTION: 9400 SERIES SURFACE PAIR SVR (DADE)
MATERIAL:
COIL WIDTH:
PROGRESSION:
WEIGHT:
FINISH:
TOLERANCE: UNLESS NOTED OTHERWISE
DECIMALS .XXX----±.005
DECIMALS .XX-----±.010
FRACTIONS--------±1/64
ANGLES----------±2°
SCALE: NONE | DRAWN BY: T.A. | DATE: 01-02-01 | CHKD BY: | DATE:

DORMA
DORMA DOOR CONTROLS INC
1003 W. BROADWAY
STEELEVILLE, ILLINOIS 62288

DWG. 3 OF 4
DWG. NO. 9000DADE

R:\Proj 000 -250\#245\9000DADE_12-01-05-R5\9000DADE3-REV5.DWG

9500 SERIES MORTISE DEVICE INSTALLATION FOR HURRICANE CODE
SINGLE DOOR APPLICATION ONLY

TYPICAL SINGLE DOOR APPLICATION
LEFT HAND REVERSE BEVEL DOOR SHOWN
RIGHT HAND REVERSE BEVEL DOOR WOULD BE OPPOSITE

BILL OF MATERIAL			
ITEM	DESCRIPTION	PART NUMBER	QTY.
1	APPROVED DOOR & FRAME	UNDER SEPERATE NOA	1
2	9500 CHASSIS ASSY.	ALUMINUM	1
3	TOUCHBAR/RAIL ASSY.		1
4	THRU BOLTS		2
5	ENDCAP BRACKET		1
6	OUTSIDE TRIM		1
7	ENDCAP		1
8	CHASSIS COVER		1
9	MORTISE LOCK BODY	STEEL	1
10	12-24 R.H.P.M.S.		6
11	8-32 F.H.P.M.S.		6
12	HINGE		3
13	COMBINATION SCREW		2
14	FACE PLATE & SCREWS	STEEL	1
15	#465 STRIKE & SCREWS	STEEL	1

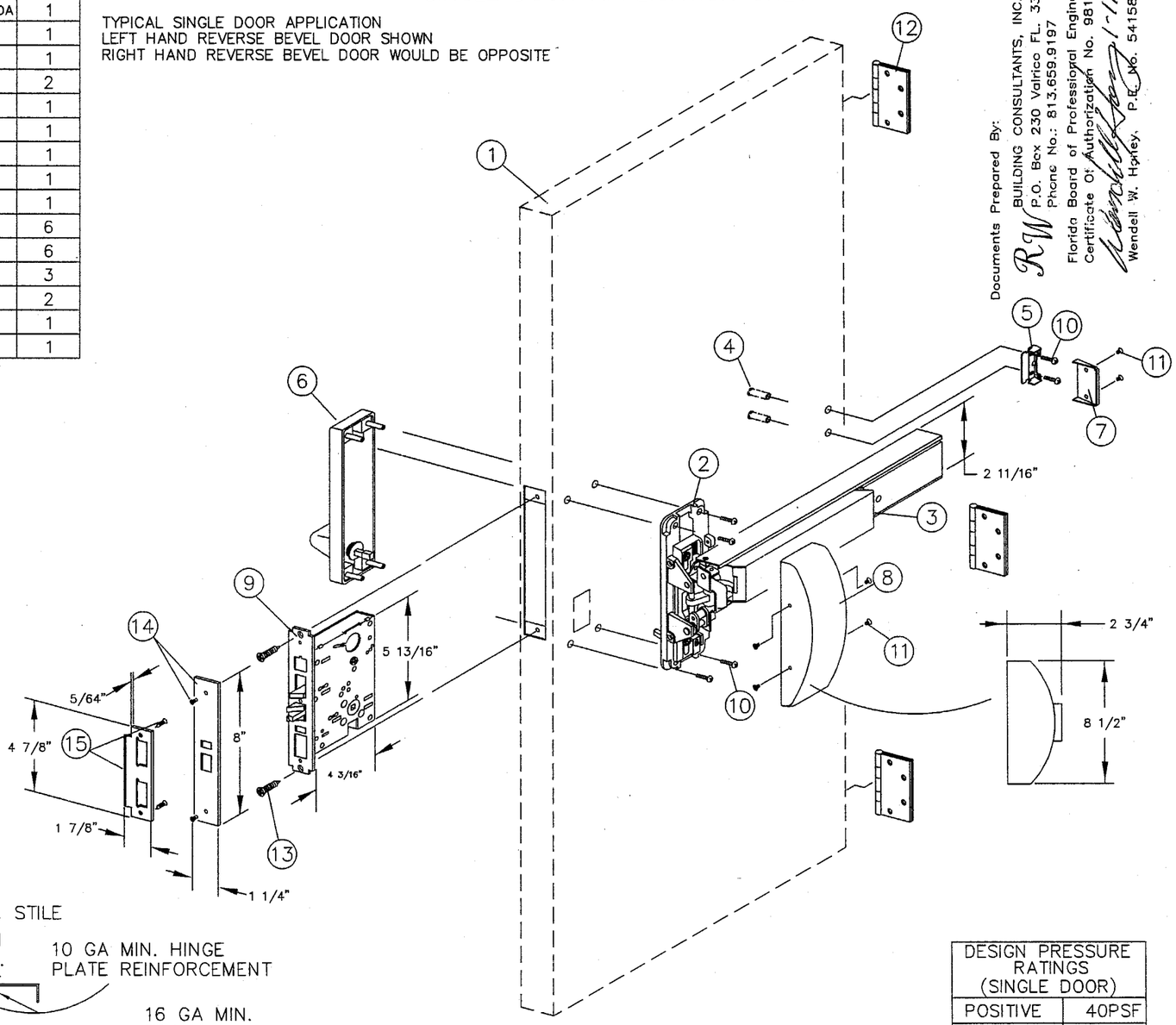

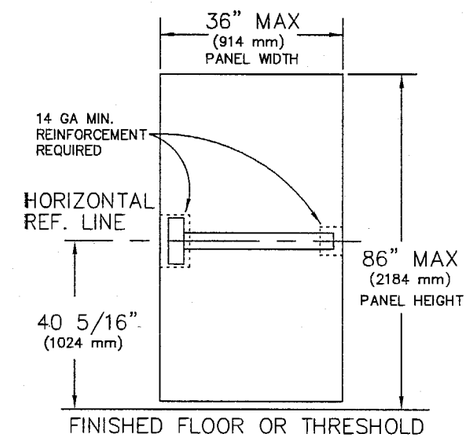

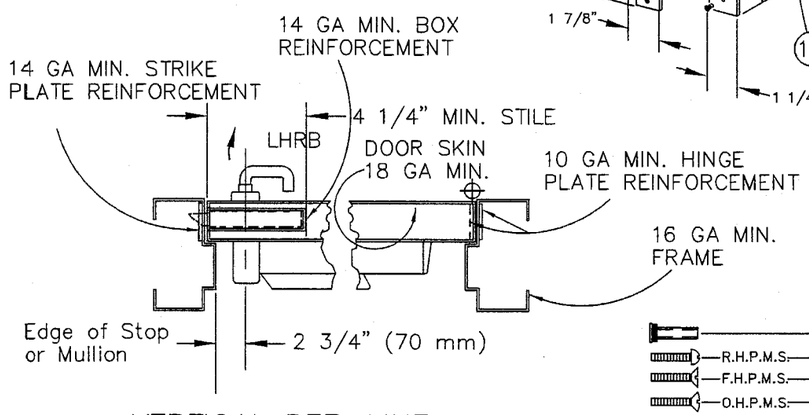

VERTICAL REF. LINE

Thru Bolt
R.H.P.M.S.—Round Head Phillips Machine Screw
F.H.P.M.S.—Flat Head Phillips Machine Screw
O.H.P.M.S.—Oval Head Phillips Machine Screw
F.H.P.U.C.M.S.—Flat Head Phillips Undercut Machine Screw
T.H.P.U.C.M.S.—Flat Head Phillips Undercut Machine Screw

DESIGN PRESSURE RATINGS (SINGLE DOOR)	
POSITIVE	40PSF
NEGATIVE	40PSF

Documents Prepared By:
RW BUILDING CONSULTANTS, INC.
P.O. Box 230 Valrico FL. 33595
Phone No.: 813.659.9197
Florida Board of Professional Engineers
Certificate Of Authorization No. 9813
Wendell W. Hoxley, P.E. No. 54158
1-17-06

GENERAL NOTES

LIMITATIONS:

1. Each of this device is approved to be used as equal alternate to corresponding lock approved to be used in applicable 16 ga Outswing Steel Doors holding a current Notice of Acceptance. The lowest Design Pressure Rating shall apply.
2. This device shall be installed in a 18 ga commercial steel door panel no wider and higer than shown in these approved drawings.
3. Installation of this device requires steel reinforcements as indicated.
4. Electrical devices are not part of this approval and must be reviewed by corresponding authority.

Certification:
Underwriter's Laboratories – UL10C, UBC 7-2 (1997)
ANSI/BHMA A156.3 Grade 1 Exit Device
3/4" Minimum latchbolt throw
Frame 16 GA minimum.
Strike, hinge & header 14 GA minimum reinforcement.
Door 18 GA minimum.
Lock stile, panic reinforcement box 14 GA minimum, hinge reinforcement 10 ga. min.
All reinforcements to to spot welded or better by door manufacturer.
All dimensions in accordance with manufacturer's standard installation instructions.

Exit device Model 9500 Series Mortise Outside trim may be one of the following designations:
W0DT, W003M, W102, W302, W103M, W303M, W122M, W322M, W105M, W305M, YODT, YK02, YC02, YT02, YR02, Y003M, YK03MR, YC03MR, YT03MR, YR03MR, YK08M, YC08M, YT08M, YR08M, YK23M, YC23M, YT23M or YR23R.

Thru bolts must be used on all installations as shown.

PRODUCT REVISED
as complying with the Florida
Building Code
Acceptance No. 03-0911.04
Expiration Date JANUARY 03, 2007
By Ishaq I. Llanda
Miami Dade Product Control
Division

REVISIONS	NO.	BY	DATE
Rev. Per Dade Letter	5	EW	11-30-05
Rev. mull fitting	4	EW	6-30-05
Revised Mullion	3	WH	2-9-05
Revised PSI	2	TJH	8-15-03
Revised Print	1	TA	9-1-01

DESCRIPTION: 9500 SERIES MORTISE SINGLE DOOR (DADE)
MATERIAL:
COIL WIDTH:
PROGRESSION:
WEIGHT:
FINISH:
TOLERANCE: UNLESS NOTED OTHERWISE
DECIMALS .XXX-----±.005
DECIMALS .XX------±.010
FRACTIONS--------±1/64
ANGLES----------±2°
SCALE: NONE | DRAWN BY: T.A. | DATE: 12-20-00 | CHKD BY: | DATE:

DORMA
DORMA DOOR CONTROLS INC
1003 W. BROADWAY
STEELEVILLE, ILLINOIS 62288

DWG. 4 OF 4
DWG. NO. 9000DADE

R:\PROJ 000 -250\PF245\9000DADE_12-01-05-R5\9000DADE4-REV5.DWG